Final

Belle Terre Blvd/Pkwy Intersections Analysis Report

February 2016

Final

Belle Terre Blvd/Pkwy Intersections Analysis Report

PREPARED FOR

River to Sea Transportation Planning Organization

PREPARED BY

225 East Robinson Street
Suite 300
Orlando, FL 32801
407.697.4006

February 2016

AL-AHAD M. EKRAM
LICENSE
NO. 79191
STATE OF
FLORIDA
PROFESSIONAL ENGINEER

Professional Engineer: Al-Ahad Ekram
P.E. # 79191
February 17, 2016

Executive Summary

Vanasse Hangen Brustlin (VHB) Inc. was retained by the River to Sea Transportation Planning Organization (R2CTPO) to perform an intersections analysis study for Belle Terre Blvd/Pkwy from SR 5 (US 1) to Pine Lakes Pkwy (south), in City of Palm Coast, Flagler County, Florida. This study was initiated by the R2CTPO in response to an application submitted by the City of Palm Coast to identify cost effective improvements to eliminate or reduce crashes and minimize delay to through traffic at intersections along Belle Terre Blvd/Pkwy. The main objective of this study is to identify specific intersection improvements to be included in the FDOT work program, develop a conceptual signing plan for the corridor and provide planning level cost estimates for the proposed intersection improvements.

Traffic data was collected from the City of Palm Coast and field counts, and existing conditions were evaluated including levels of service (AM and PM peak hours) for the study intersections. During the year 2015 AM and PM peak hour conditions, all the signalized and unsignalized intersections within the study limits of the Belle Terre Blvd/Pkwy are currently operating above the standard LOS D, with the exception of the minor approaches of the intersection at Belle Terre Pkwy at Eastwood Dr/Market Ave and Belle Terre Pkwy at Pine Grove Dr, which were found to operate below LOS D.

Comparing traffic growth rates from sources like year 2030 CFRPM model volumes, Bureau of Economic & Business Research (BEBR) population projections for Flagler County, and expected land use characteristics within the project area, this study recommended annual growth rate of 5.5% for Belle Terre Blvd and 1.9% for Belle Terre Pkwy between existing year 2015 and future year 2030. Simple annual growth rates of 6.1%, 1.60%, 6.27%, 17.68%, 3.94% and 5.90% are recommended for US 1, SR 100, Royal Palms Pkwy, Rymfire Dr, Whiteview Pkwy and Pine Lakes Pkwy, respectively between existing year 2015 and future year 2030.

The projected Annual Average Daily Traffic (AADT) volumes for the Build Alternative are illustrated in **Figure ES-1**. The future turning movement volumes are provided in **Figures ES-2A through ES-2C**.

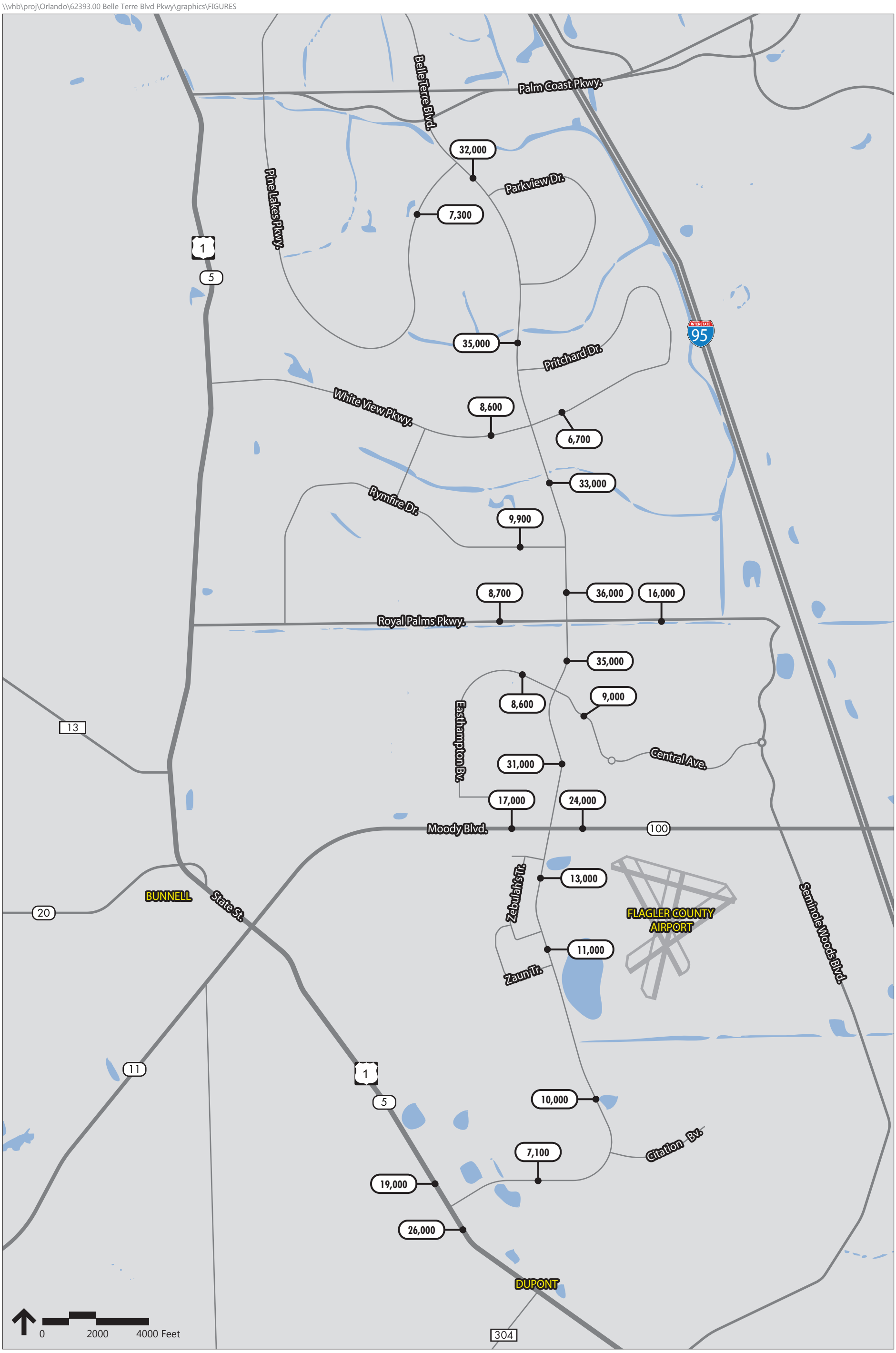

X,XXX Annual Average Daily Traffic (AADT)

Figure ES-1
Future Year 2030
Annual Average Daily Traffic (AADT)

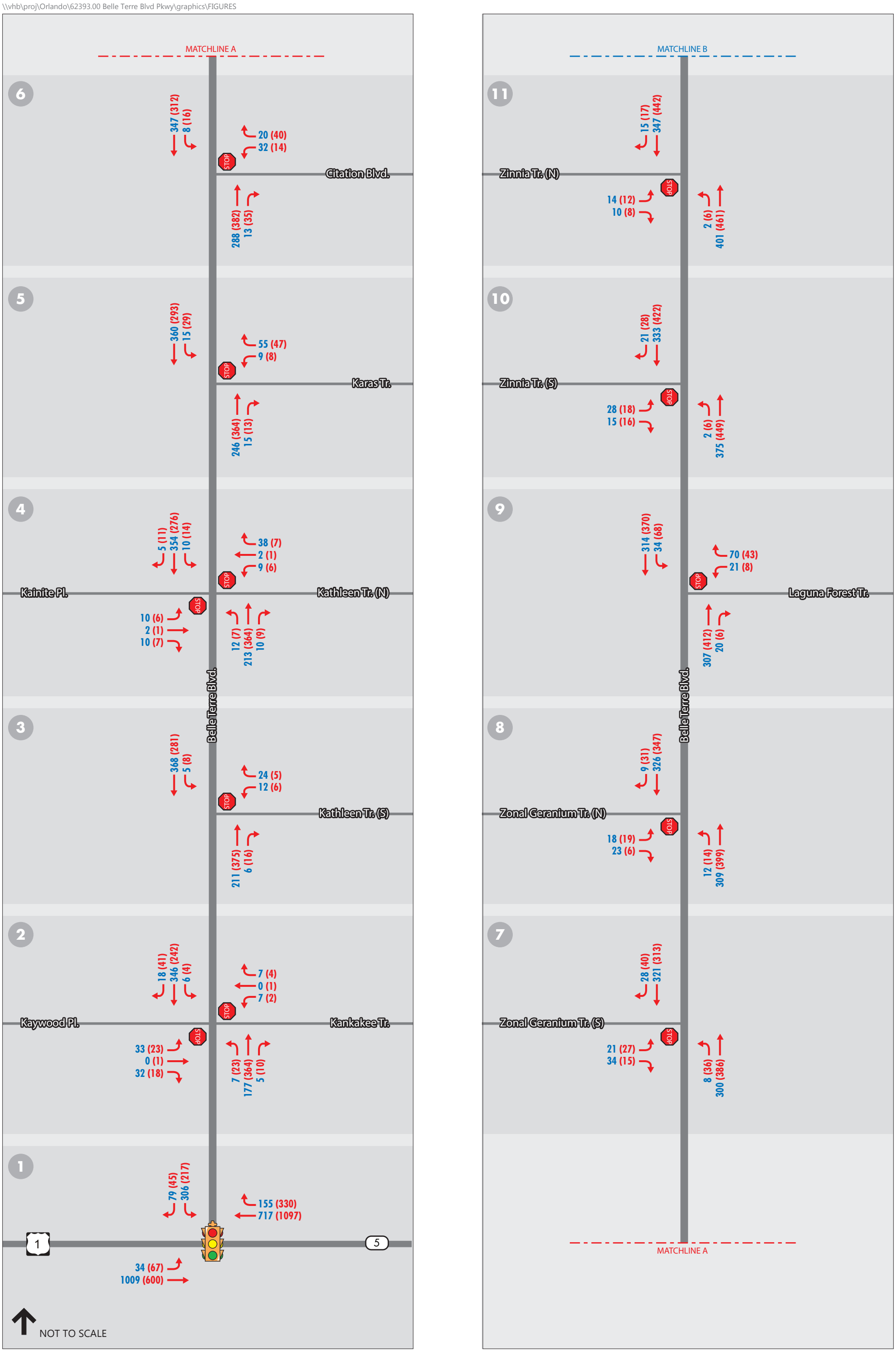

Traffic Movement

AM (PM) Traffic Volumes

Stop-Controlled Intersection

Signalized Intersection

Figure ES-2A
Future Year 2030
Turning Movement Volumes

Traffic Movement

AM (PM) Traffic Volumes

Stop-Controlled Intersection

Signalized Intersection

Figure ES-2B
Future Year 2030
Turning Movement Volumes

Traffic Movement

AM (PM) Traffic Volumes

Stop-Controlled Intersection

Signalized Intersection

Figure ES-2C
Future Year 2030
Turning Movement Volumes

Crash analysis was performed using the latest three (3) years of crash data (from September 1, 2012 to September 1, 2015) along the Belle Terre Blvd/Pkwy. A total of 265 crashes occurred within the study limits in the last three years. Following are the intersections with 15 or more crashes in the three years analysis period:

- Belle Terre Blvd/Pkwy and SR 100
- Belle Terre Pkwy and Royal Palms Pkwy
- Belle Terre Pkwy and Easthampton Blvd/Central Ave
- Belle Terre Pkwy and Pine Grove Dr
- Belle Terre Pkwy and Eastwood Dr/Market Ave
- Belle Terre Pkwy and Pine Lakes Pkwy
- Belle Terre Pkwy and Whiteview Pkwy

A No-Build alternative analysis was performed with the future traffic volumes and existing geometry, and was found that several of the intersections are projected to perform at LOS E or worse with very high delays in the year 2030. A field review was performed based on the results of the No-Build alternative analysis and crash history. It was observed that the intersections at Belle Terre Pkwy at Eastwood Drive/Market Avenue and Belle Terre Pkwy at Pine Grove Dr had significant delays for the minor street approaches.

The proposed intersection geometry for the recommended Build Alternative is illustrated in **Figure ES-3A through ES-3C** and shown in **Table ES-1**. The improvements are ranked according to the anticipated operational and safety benefits resulting from the proposed improvements. In addition, a conceptual signing plan was developed for the entire study corridor.

Table ES-1: Recommended Build Alternative Improvements

Rank	Intersection	Recommended Improvements
1	Belle Terre Pkwy and Pine Grove Dr	Provide exclusive right turn at northbound approach. Restrict westbound left-turn movement. The diverted traffic will take U-turn at the signalized intersection of Whiteview Parkway.
2	Belle Terre Blvd/Pkwy and SR 100	Optimize signal timing. Provide additional exclusive left turn at eastbound approach and exclusive right turn at northbound approach.
3	Belle Terre Pkwy and Eastwood Dr/Market Ave	Consider installing a signal
4	Entire corridor	Provide adequate guide signs
5	Belle Terre Pkwy and Royal Palms Pkwy	Optimize signal timing. Provide additional exclusive right turns at all approaches
	Belle Terre Blvd/Pkwy and Easthampton Blvd/Central Ave	Optimize signal timing. Provide exclusive right turn at eastbound approach
6	Belle Terre Pkwy and Point Pleasant Dr	Provide exclusive right turn at northbound approach.
	Belle Terre Pkwy and Ponce Deleon Dr	
	Belle Terre Pkwy and Pritchard Dr	
6	Belle Terre Pkwy and Whippoorwill Dr	Provide exclusive right turn at southbound approach.
7	Belle Terre Pkwy and Whiteview Pkwy	Provide high emphasis crosswalk and pedestrian push-button signals at the north leg of the intersection

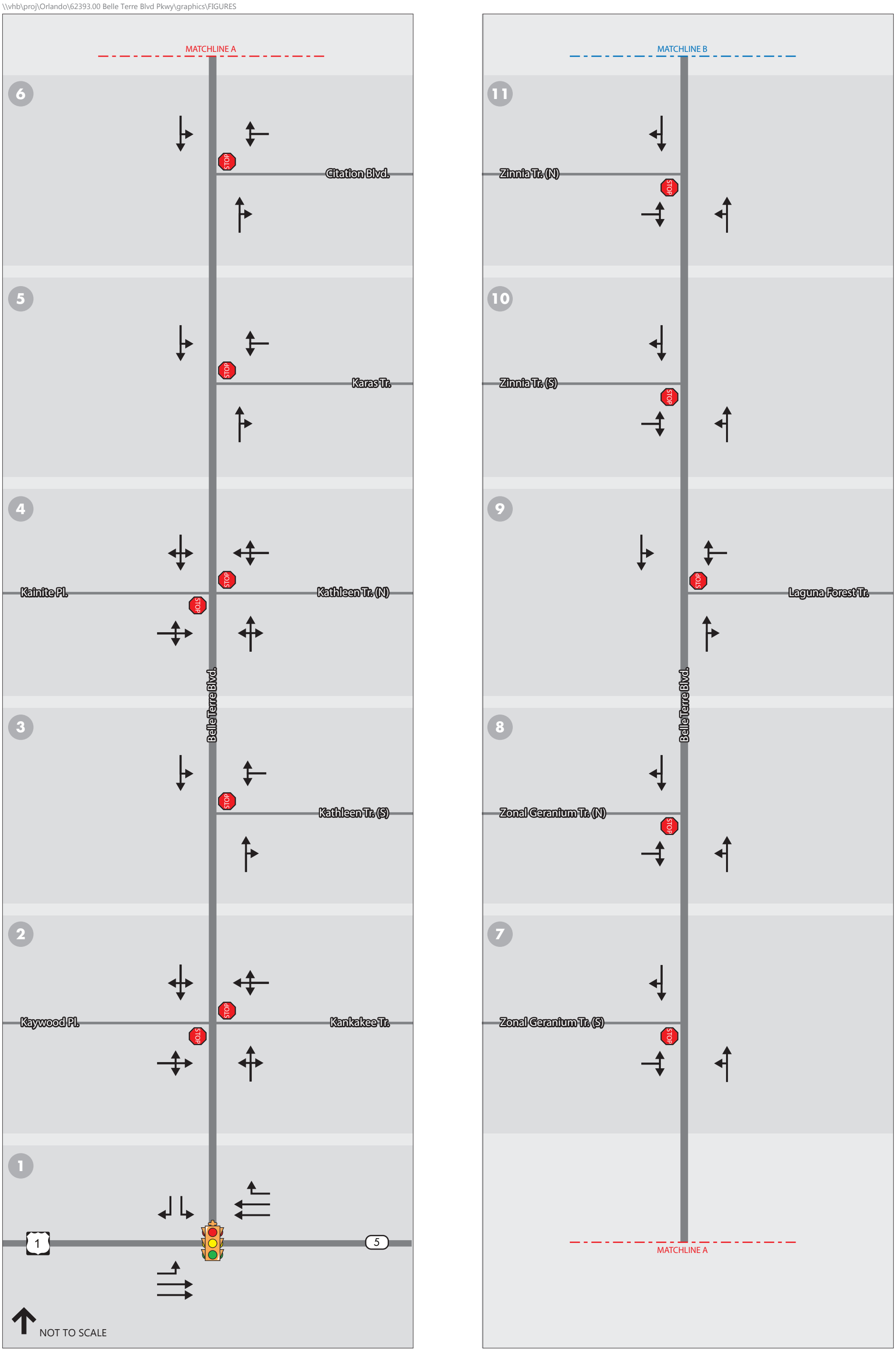

Lane Geometry

Stop-Controlled Intersection

Signalized Intersection

Figure ES-3A

Future Year 2030 Build Geometry

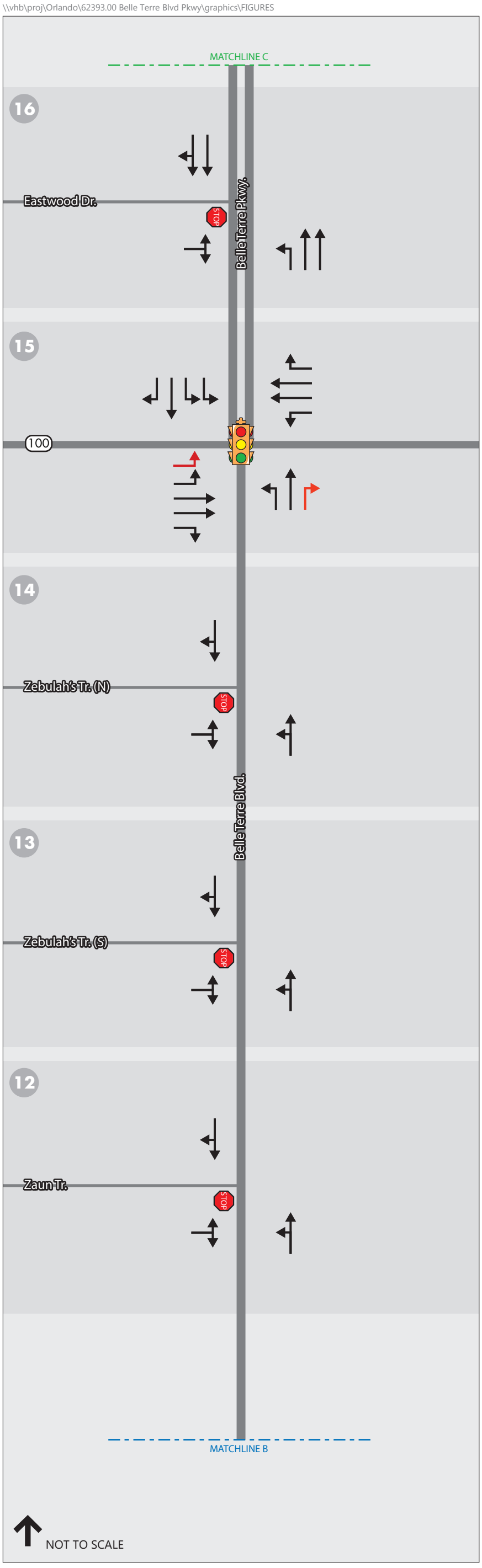

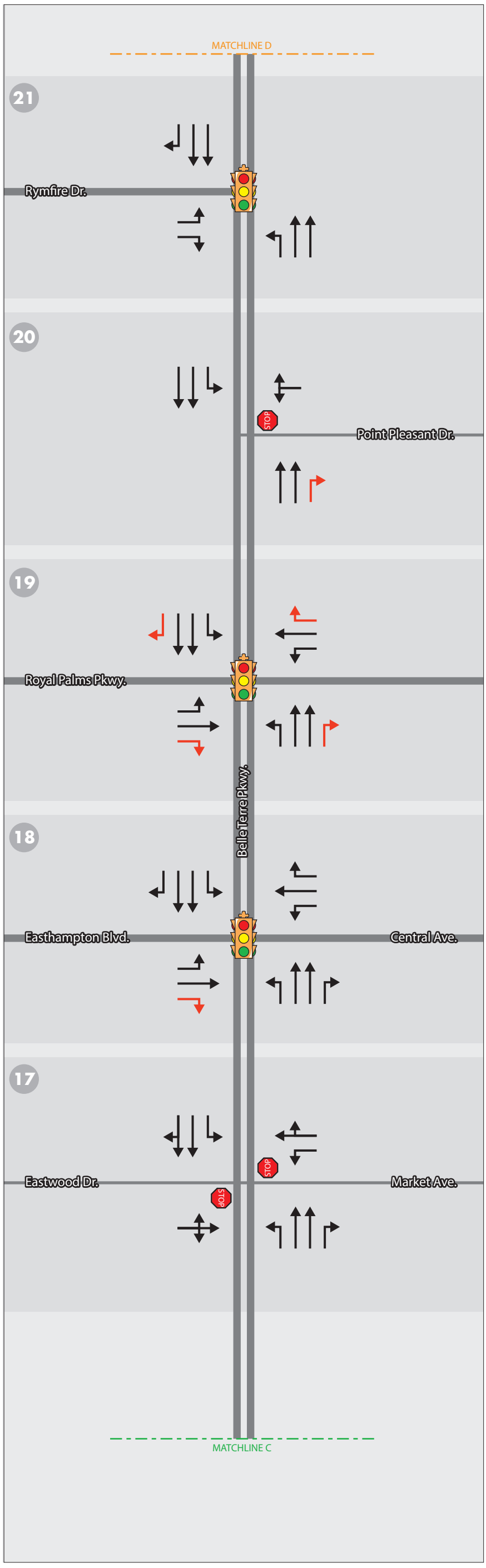

Lane Geometry

Proposed Turn Lane

Stop-Controlled Intersection

Signalized Intersection

Figure ES-3B

Future Year 2030 Build Geometry

Lane Geometry

Proposed Turn Lane

Stop-Controlled Intersection

Signalized Intersection

Figure ES-3C

Future Year 2030 Build Geometry

This study the queue length requirements at the signalized intersections along the study corridor. **Table ES-2** show the recommended queue lengths for the design year 2030 design hour conditions.

Table ES-2: Future Year 2030 Signalized Intersection Queue Length Requirements

Study Intersection	Eastbound Left	Eastbound Right	Westbound Left	Westbound Right	Northbound Left	Northbound Right	Southbound Left	Southbound Right
	Proposed Storage (ft)	Proposed Storage (ft)	Proposed Storage (ft)	Proposed Storage (ft)	Proposed Storage (ft)	Proposed Storage (ft)	Proposed Storage (ft)	Proposed Storage (ft)
SR5/ US 1	-	-	-	Existing	-	Existing	Existing	-
SR 100	Add Lane	Existing	Existing	600	Existing	Add Lane	Existing	-
Easthampton Blvd/Central Ave	-	Add Lane	Existing	-	Existing	Existing	Existing	Existing
Royal Palms Pkwy	Existing	Add Lane	Existing	Add Lane	Existing	Add Lane	450	Add Lane
Rymfire Dr	Existing	-	-	-	Existing	-	-	Existing
Whiteview Pkwy	Existing	-	Existing	-	425	Existing	Existing	Existing
School Entrance	-	-	-	-	-	Existing	Existing	-
Parkview Dr (S)	-	-	375	-	-	-	Existing	-
Pine Lakes Pkwy	Existing	Existing	-	-	225	-	-	Existing

It should be noted that the specific lengths do not include the taper or deceleration distance (refer to FDOT index 301 to determine the appropriate specific taper and deceleration length).

A planning level cost estimate was performed for the recommended improvements for the intersections as well as the conceptual signing plan for the project corridor. **Table ES-3** shows the approximate cost estimates.

Table ES-3: Planning Level Cost Estimates

Intersection	Cost
Belle Terre Pkwy and Pine Grove Dr	$193,900
Belle Terre Blvd/Pkwy and SR 100	$205,800
Belle Terre Pkwy and Royal Palms Pkwy	$416,800
Belle Terre Blvd/Pkwy and Easthampton Blvd/Central Ave	$105,900
Belle Terre Pkwy and Point Pleasant Dr	$163,200
Belle Terre Pkwy and Ponce Deleon Dr	$163,200
Belle Terre Pkwy and Pritchard Dr	$163,200
Belle Terre Pkwy and Whippoorwill Dr	$131,800
Belle Terre Pkwy and Whiteview Pkwy	$11,000
Signing for the entire corridor	$240,000
Total	**$1,794,800**

Note: Right of way costs are not included in this preliminary cost estimate

FINAL

Belle Terre Blvd/Pkwy Intersections Analysis Report

This Intersections Analysis Report is prepared to provide the River to Sea Transportation Planning Organization with existing and future traffic analysis and crash review. The report includes the development of existing traffic volumes, evaluation of existing operating conditions, development of design traffic characteristics and development of future growth rates. The report also includes the development of the future traffic forecasts for No Build and Build Alternatives and evaluation of operating conditions of the intersections and recommended improvements as appropriate during the service life of the project. In addition, planning level cost estimates for the recommended improvements and a conceptual signing plan for the entire study corridor has been prepared as part of this report.

Prepared For:

River to Sea Transportation Planning Organization (R2CTPO)
2570 W. International Speedway Blvd., Suite 100
Daytona Beach, FL 32114-8145

February 2016

Table of Contents

1 INTRODUCTION 1

1.1 DESCRIPTION OF PROJECT 3

1.2 OBJECTIVE 3

1.3 METHODOLOGY 3

2 PROJECT INFORMATION 5

2.1 PROJECT LOCATION, LIMITS AND FIELD INVENTORY 5

2.1.1 BELLE TERRE BLVD/PKWY FROM SR 5/US 1 TO PINE LAKES PKWY (S) 5

2.2 EXISTING TRANSIT SERVICE 7

3 EXISTING CONDITIONS 8

3.1 TRAFFIC COUNT INFORMATION 8

3.2 EXISTING GEOMETRY 9

3.3 EXISTING TRAFFIC VOLUMES 14

3.4 YEAR 2015 TURNING MOVEMENT COUNTS 17

3.5 YEAR 2015 LOS ANALYSIS 21

4 DEVELOPMENT OF DESIGN CHARACTERISTICS 23

4.1 STANDARD K FACTOR 23

4.2 D FACTOR 23

4.2.1 BELLE TERRE BLVD/PKWY CORRIDOR 25

4.2.2 SIDE STREETS 25

4.3 T_{DAILY} & T_{PEAK} FACTORS 25

4.3.1 BELLE TERRE BLVD/PKWY CORRIDOR 26

4.3.2 SIDE STREETS 26

4.4 RECOMMENDED DESIGN TRAFFIC CHARACTERISTICS 27

5 CRASH DATA REVIEW 28

5.1 CRASH SUMMARY BY YEAR AND CONDITIONS 28

5.2 CRASH SUMMARY BY CRASH TYPES 32

6 FUTURE TRAFFIC FORECAST 33

6.1 DESIGN PERIOD 33

6.2 DEVELOPMENTS OF REGIONAL IMPACT (DRI) 33

6.3 HISTORICAL TRAFFIC GROWTH 34

6.4 FLAGLER COUNTY POPULATION PROJECTIONS 35

6.5 TRAVEL DEMAND MODEL 35
6.6 RECOMMENDED GROWTH RATES 37
6.7 INTERSECTION DESIGN HOUR VOLUMES 40
7 FUTURE OPERATIONAL ANALYSIS 44
7.1 NO BUILD ALTERNATIVE OPERATIONAL ANALYSIS 44
7.1.1 NO BUILD GEOMETRY 44
7.1.2 INTERSECTION OPERATIONAL ANALYSIS 44
7.2 BUILD ALTERNATIVE OPERATIONAL ANALYSIS 46
7.2.1 FIELD REVIEW 46
7.2.2 BUILD ALTERNATIVE GEOMETRY 46
7.2.3 INTERSECTION OPERATIONAL ANALYSIS 51
8 RECOMMENDATIONS 52
9 PRELIMINARY COST ESTIMATES 55
10 APPENDICES 56

List of Figures

Figure 1: Project Location Map 2
Figure 2: Belle Terre Pkwy Intersections Analysis Methodology 4
Figure 3A: Existing Year 2015 Geometry 11
Figure 3B: Existing Year 2015 Geometry 12
Figure 3C: Existing Year 2015 Geometry 13
Figure 4: Existing Year 2015 AADT Volumes 16
Figure 5A: Existing Year 2015 Turning Movement Volumes 18
Figure 5B: Existing Year 2015 Turning Movement Volumes 19
Figure 5C: Existing Year 2015 Turning Movement Volumes 20
Figure 6: Future Year 2030 Annual Average Daily Traffic 39
Figure 7A: Future Year 2030 Turning Movement Volumes 41
Figure 7B: Future Year 2030 Turning Movement Volumes 42
Figure 7C: Future Year 2030 Turning Movement Volumes 43
Figure 8A: Future Year 2030 Build Geometry 48
Figure 8B: Future Year 2030 Build Geometry 49
Figure 8C: Future Year 2030 Build Geometry 50

List of Tables

Table 1: Roadway Characteristics of Belle Terre Blvd/Pkwy Corridor 6
Table 2: Existing Year 2015 Traffic Volumes 15
Table 3: Existing Year 2015 Intersection LOS Analysis Summary 22
Table 4: Historical FTI Data - D Values 24
Table 5: Recommended Range of D Values 24
Table 6: Historical FTI Data - T_{daily} Values 26
Table 7: Recommended Design Traffic Characteristics 27
Table 8: Crash Summary by Severity and Conditions (Sept 2012-Sept 2015) 28
Table 9: Crash Summary by Intersections (Sept 2012-Sept 2015) 29
Table 10: Crash Summary by Crash Types (Sept 2012-Sept 2015) 32
Table 11: Trends Analysis 34
Table 12: Population Analysis – BEBR Estimates 35
Table 13: Growth Rate between Existing (2015) AADT and 2030 Model AADT 36
Table 14: Recommended Growth Rates 38
Table 15: Future Year 2030 Intersection LOS Analysis Summary 45
Table 16: Recommended Build Scenario Improvements 52
Table 17: Future Year 2030 Signalized Intersections Queue Length Requirements 54
Table 18: Preliminary Cost Estimates 55

1 Introduction

Vanasse Hangen Brustlin (VHB) Inc. was retained by the River to Sea Transportation Planning Organization (R2CTPO) to perform an intersections analysis study for Belle Terre Blvd/Pkwy from SR 5 (US 1) to Pine Lakes Pkwy (south), in City of Palm Coast, Flagler County, Florida. This study was initiated by the R2CTPO in response to an application submitted by the City of Palm Coast to identify cost effective improvements to eliminate or reduce crashes and minimize delay to through traffic at intersections along Belle Terre Blvd/Pkwy. The main objective of this study is to identify specific intersection improvements to be included in the FDOT work program.

The Design Traffic Process for this study is divided into two broad phases. They are:

- **Phase One –** This phase of the study entails the development of existing traffic volumes, design characteristics, evaluation of existing operating conditions and crash review.
- **Phase Two –** This phase of the study entails the development of future traffic forecasts for the existing roadway condition. This study provides an evaluation of the characteristics and operating conditions of the corridor and local facilities during a proposed build year of 2030. Under the future year condition, intersection improvements were evaluated to improve safety and operations.

The current document is prepared in support of the above mentioned two phases of the Design Traffic Analysis. This report also includes a standard signing plan and cost estimates for the proposed improvements for the study intersections along the corridor. This final version is prepared based on the comments received from the City (see **Appendix A** for comments and responses). The study area map is shown in **Figure 1**.

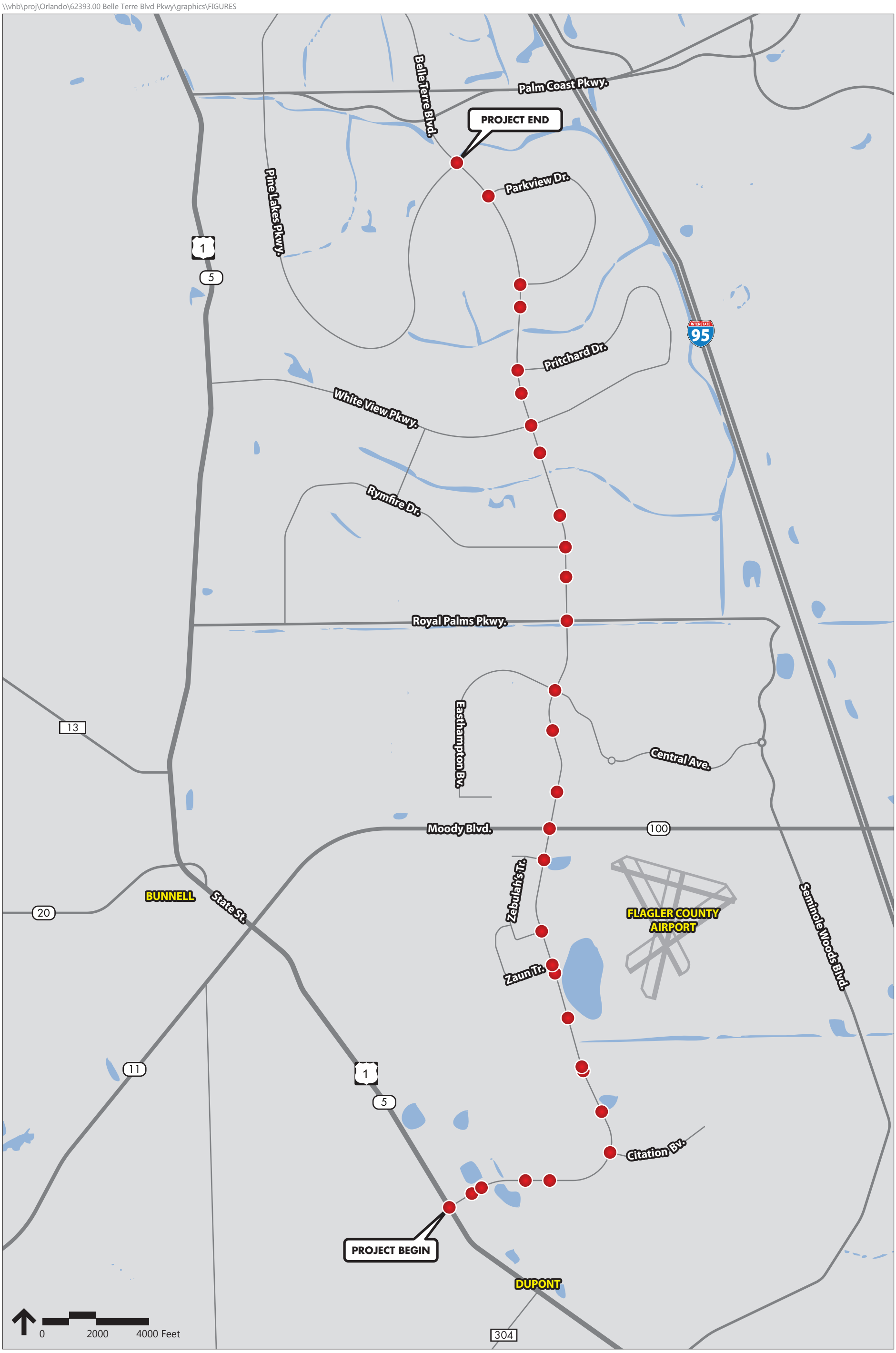

Turning Movement Count Locations

Figure 1

Project Location Map

1.1 Description of Project

The City maintained Belle Terre Blvd/Pkwy corridor is primarily a north/south facility, which in its entirety, extends from a north terminus at Pine Lake Parkway to a south terminus at SR 5 (US 1), in the city of Palm Coast, Flagler County. The corridor within the limits of this study is identified to be deficient in the 2035 Comprehensive Plan for the City of Palm Coast (amended March 2015) and improvements may be required to maintain the adopted level of service standard. Copies of the Comprehensive Plan are provided in **Appendix B**.

1.2 Objective

The objectives of this Technical Memorandum are:

- Provide the City with the Average Annual Daily Traffic (AADT) and Peak Hour Volumes;
- Perform intersection Level of Service (LOS) for the base year 2015;
- Develop design traffic characteristics including Standard K Factor, Design Hour Directional Demand (D_{30}), and percentage of trucks for both the design hour and daily demand (T_{peak}, T_{daily}) for use in the operational analysis of future conditions;
- Development of future traffic volumes for the corridor and study intersections,
- Perform future analysis for No-Build conditions and Build conditions based on required improvements to meet the adopted level of service standards and improved safety conditions;
- Develop conceptual signage plan for the entire study corridor;
- Prepare cost estimates for the proposed improvements for the study intersections along the corridor

1.3 Methodology

The methodology used for the development of this report is illustrated in **Figure 2.**

Figure 2: Belle Terre Pkwy Intersections Analysis Methodology

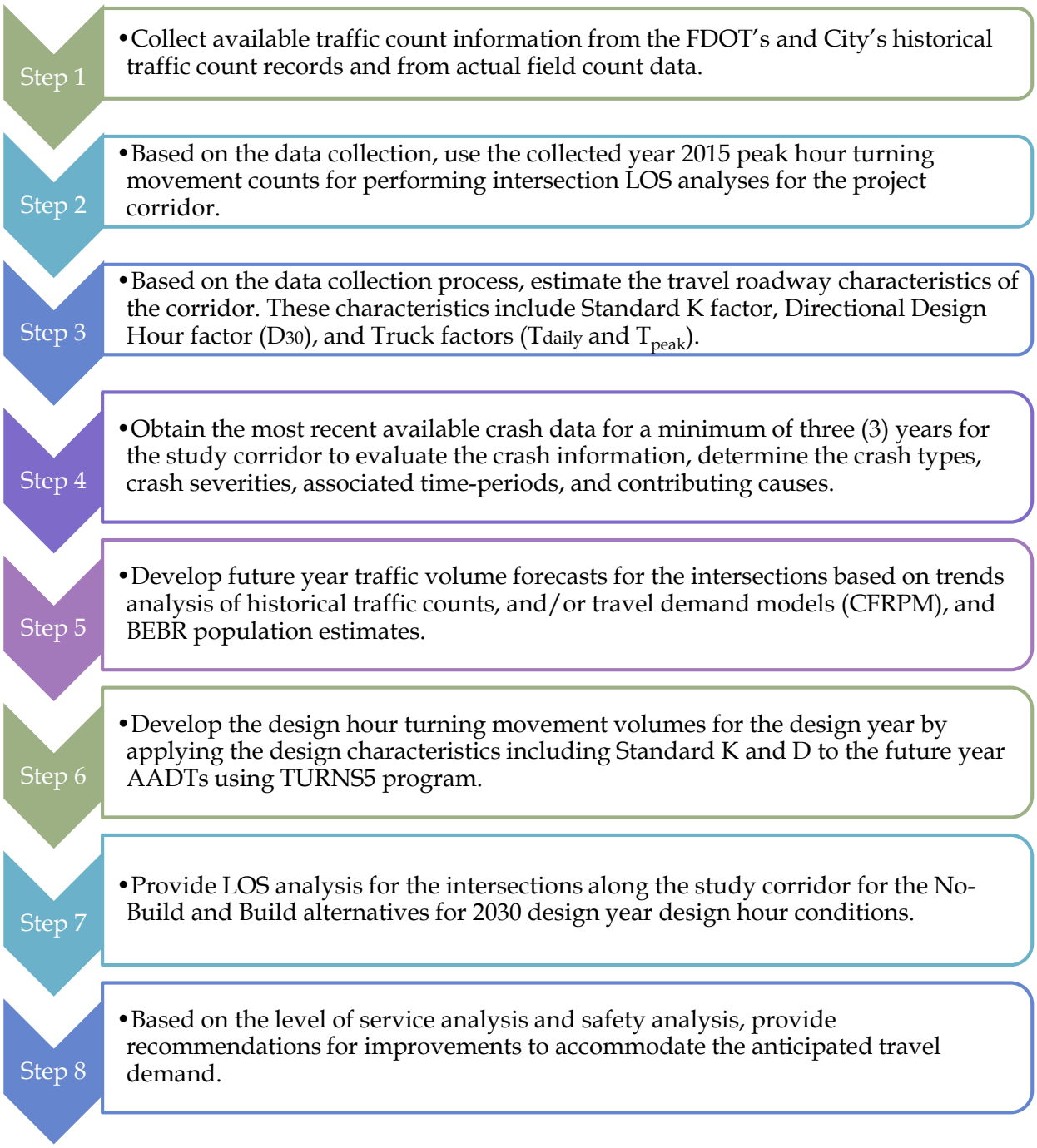

2 Project Information

2.1 Project Location, Limits and Field Inventory

2.1.1 Belle Terre Blvd/Pkwy from SR 5/US 1 to Pine Lakes Pkwy (S)

Belle Terre Pkwy serves both local and regional traffic; the existing roadway characteristics that are relevant to this study are shown in **Table 1.** The relevant Roadway Characteristics Inventory data (RCI) are provided in **Appendix C** of this report.

Table 1: Roadway Characteristics of Belle Terre Blvd/Pkwy Corridor

Characteristic	Observation
Limits	▪ 73000011 – Belle Terre Blvd (M.P. 0.000) to (M.P. 3.751) ▪ 73517000 – Belle Terre Pkwy (M.P. 0.000) to (M.P. 5.058)
FDOT Roadway ID	▪ 73000011 ▪ 73517000
Roadway Maintaining Agency	City of Palm Coast
Functional Classification	▪ Two Lane Undivided Urban Minor Arterial (Road ID: 73000011 M.P. 0.000 to M.P. 3.751) ▪ Four Lane Divided Urban Minor Arterial (Road ID: 73517000 M.P. 0.000 to M.P. 5.058)
Speed Limits	▪ FDOT 73000011 (M.P. 0.000 to M.P. 3.751): 50 MPH ▪ FDOT 73157000 (M.P. 0.000 to M.P. 5.058): 45 MPH
Adopted LOS	FDOT Standard: "D"; Flagler County Standard: "D"; City of Palm Coast Standard: "D"
Strategic Intermodal System Facility	No
Signalized Intersections from South to North	▪ SR 5/US 1 (73000011 at M.P. 0.000) ▪ SR 100 (73000011 at M.P. 3.751, 73157000 at M.P. 0.000) ▪ Easthampton Blvd/Central Ave (73157000 M.P. 1.039) ▪ Royal Palms Pkwy (73157000 M.P. 1.553) ▪ Rymfire Drive (73157000 M.P. 2.090) ▪ Whiteview Pkwy (73157000 M.P. 3.009) ▪ School Entrance (73157000 M.P. 3.857) ▪ Parkview Drive (73157000 M.P. 4.029) ▪ Pine Lakes Pkwy (73157000 M.P. 5.058)
Land Uses	Predominantly residential use along the entire study corridor. Strip commercial use near the intersection of Belle Terre Pkwy and SR 100. Flagler County Airport on the South side of SR 100 near Belle Terre Pkwy.
Pavement Width	11 foot wide travel lanes from 73000011 M.P. 0.000 – M.P. 3.751 12 foot wide travel lanes from 73157000 M.P. 0.000 – M.P. 5.058
Sidewalks	▪ 10' sidewalk present on the north and east sides of Belle Terre Blvd from 73000011 M.P. 0.000 to M.P. 3.751. ▪ 10' sidewalk present on the east sides of Belle Terre Blvd Pkwy from 73157000 M.P. 1.039 to M.P. 5.058. ▪ 5' sidewalk present on the west sides of Belle Terre Blvd Pkwy from 73157000 M.P. 0.000 to M.P. 5.058
Parallel Parking	None
Bike Lanes	None

2.2 Existing Transit Service

Flagler County Public Transportation (FCPT) is a door-to-door shared ride para-transit Service. FCPT does not have fixed routes and so passengers need to reserve rides on FCPT. Therefore, there is no fixed route currently operating along the Belle Terre Blvd/Pkwy within the project limits. A copy of the 2014 User Guide of the Flagler County Public Transportation is available in **Appendix D** of this report.

3 Existing Conditions

This section describes the analysis of traffic flow operating conditions for the base year 2015 at the intersections along the project corridor.

In analyzing the year 2015 operating conditions of the intersections, traffic counts collected in the field during September of 2015 were used along with the existing roadway and intersection geometry. The intersection LOS analysis was performed for year 2015 conditions using the signal timing data provided by the City of Palm Coast. The existing conditions intersection LOS analysis was performed using the Synchro Software (version 8.0). The following sub-sections describe the overall process.

3.1 Traffic Count Information

The following list provides the location of traffic counts and type of traffic count data collected for the study. The data collected included:

- 24-hour bi-directional volume counts obtained from the City of Palm Coast (6 locations)
- 24-hour classification count (4 locations obtained from the City of Palm Coast and 13 locations obtained from the FDOT Florida Traffic Information DVD 2014)
- 4-hour intersection turning movement counts for AM and PM peak hours (30 intersections)

The weekday turning movement counts were collected for the intersections between the peak hours of 7:00-9:00 AM and 4:00-6:00 PM. The traffic count data obtained from the City (24-Hour volume and classification) were seasonally adjusted utilizing the FDOT axle and seasonal adjustment factors for Flagler County to provide 2015 annual average conditions.

Vehicle composition for the classification count was broken into three primary vehicle types:

- Passenger Vehicles – Motorcycles, Cars, Vans, and Pickups;
- Medium Truck – Buses and 2 axle Single Unit Trucks;
- Heavy Trucks – (3 or 4 axles) Single Unit Trucks, 2 axle Tractors (with 1 or 2 axle Trailer), 3 axle Trailers (2 or 3 axle Trailers), and (5, 6 and 7 axle) Multi-trailers.

Based on these categories, percentages for overall trucks (medium and heavy) were determined for peak and daily traffic conditions. Copies of all traffic count data are provided in **Appendix E**. Latest available FDOT axle and seasonal adjustment factors for Flagler County are provided in **Appendix F**.

3.2 Existing Geometry

Figure 3A through 3C provides the year 2015 intersection geometry for all of the intersections evaluated in this study. The year 2015 intersection geometry information was obtained and verified based on field visits and aerial photographs. The following intersections were evaluated as part of the existing conditions in this study.

1. Belle Terre Blvd @ US 1 (signal)
2. Belle Terre Blvd @ Kaywood Pl/Kankakee Trail (stop)
3. Belle Terre Blvd @ Kathleen Trail (S) (stop)
4. Belle Terre Blvd @ Kathleen Trail (N) /Kainite Pl (stop)
5. Belle Terre Blvd @ Karas Trail (stop)
6. Belle Terre Blvd @ Citation Blvd (stop)
7. Belle Terre Blvd @ Zonal Geranium Trail (stop)
8. Belle Terre Blvd @ Zonal Geranium Trail (N) (stop)
9. Belle Terre Blvd @ Laguna Forest Trail (stop)
10. Belle Terre Blvd @ Zinnia Trail (S) (stop)
11. Belle Terre Blvd @ Zinnia Trail (N) (stop)
12. Belle Terre Blvd @ Zaun Trail (stop)
13. Belle Terre Blvd @ Zebulah's Trail (S) (stop)
14. Belle Terre Blvd @ Zebulah's Trail (N) (stop)
15. Belle Terre Pkwy @ SR 100 (signal)
16. Belle Terre Pkwy @ Eastwood Dr (stop)
17. Belle Terre Pkwy @ Eastwood Dr/Market Ave (stop)
18. Belle Terre Pkwy @ Easthampton Blvd/Central Ave (signal)
19. Belle Terre Pkwy @ Royal Palms Pkwy (signal)
20. Belle Terre Pkwy @ Point Pleasant Dr (stop)

21. Belle Terre Pkwy @ Rymfire Dr (signal)
22. Belle Terre Pkwy @ Ponce Deleon Dr (stop)
23. Belle Terre Pkwy @ Pine Grove Dr (stop)
24. Belle Terre Pkwy @ Whiteview Pkwy (signal)
25. Belle Terre Pkwy @ Whippoorwill Dr (stop)
26. Belle Terre Pkwy @ Pritchard Dr (stop)
27. Belle Terre Pkwy @ School Entrance (signal)
28. Belle Terre Pkwy @ Parkview Dr (S) (signal)
29. Belle Terre Pkwy @ Parkview Dr (N) (stop)
30. Belle Terre Pkwy @ Pine Lakes Pkwy (signal)

The existing geometry plays a vital role in assessing the intersection level of service (LOS). Level of service is a qualitative measure of how efficient a roadway or intersection operates. LOS A represents the highest traffic flow quality, while LOS E represents traffic flow at capacity. LOS F represents forced flow congested conditions. LOS B, C and D represent a gradual degradation in traffic flow quality before reaching capacity. The existing geometry will be considered as one of the factors in determining potential intersection improvements to accommodate the travel demand.

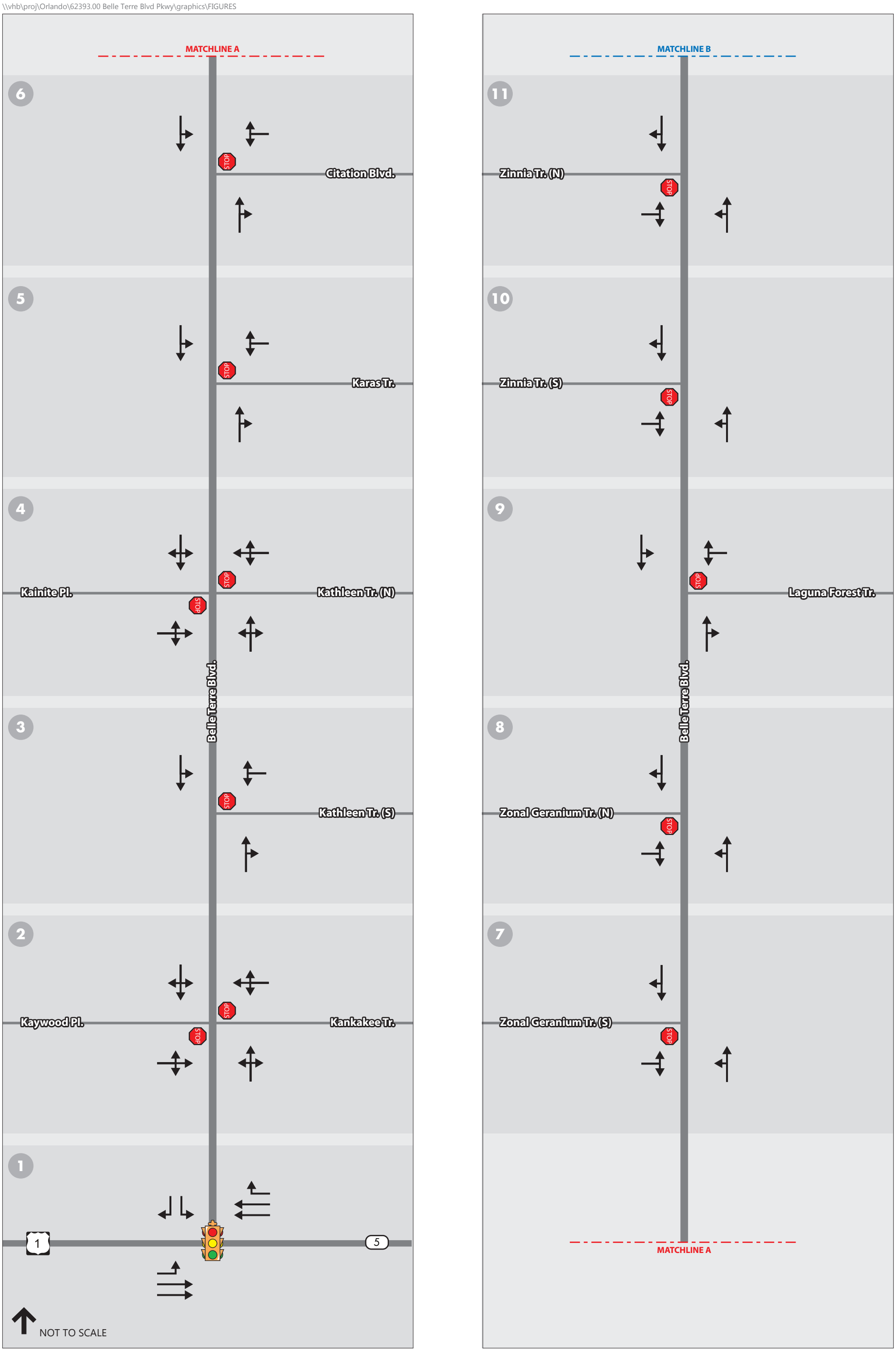

Lane Geometry

Stop-Controlled Intersection

Signalized Intersection

Figure 3A

Existing Year 2015 Geometry

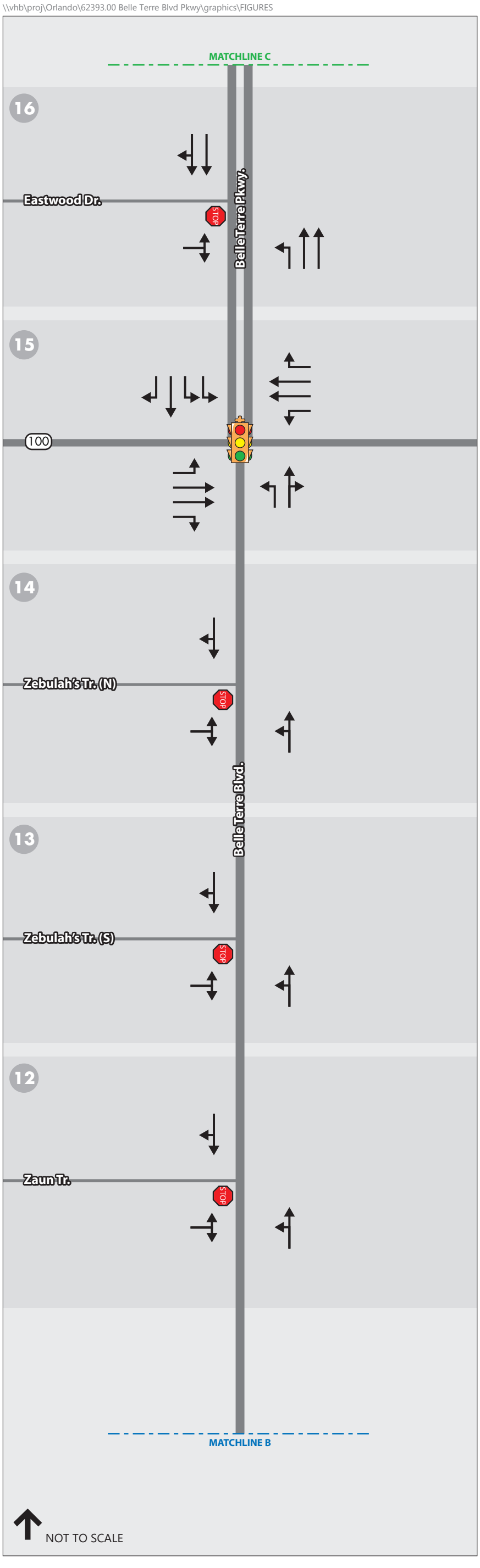

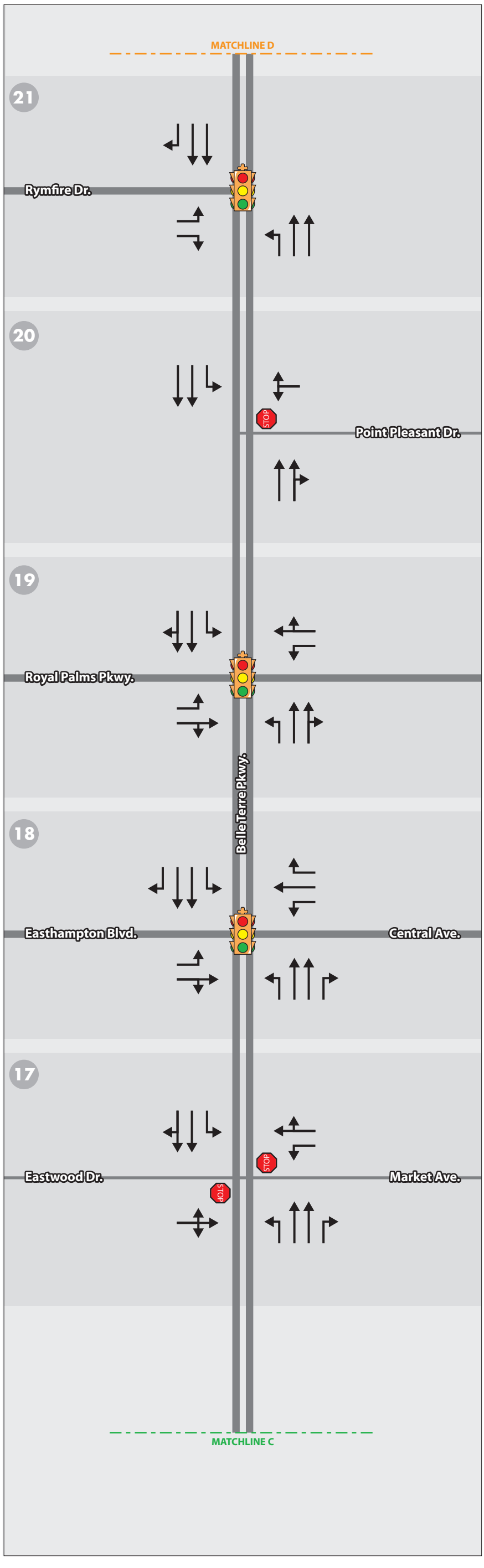

Lane Geometry

Stop-Controlled Intersection

Signalized Intersection

Figure 3B

Existing Year 2015 Geometry

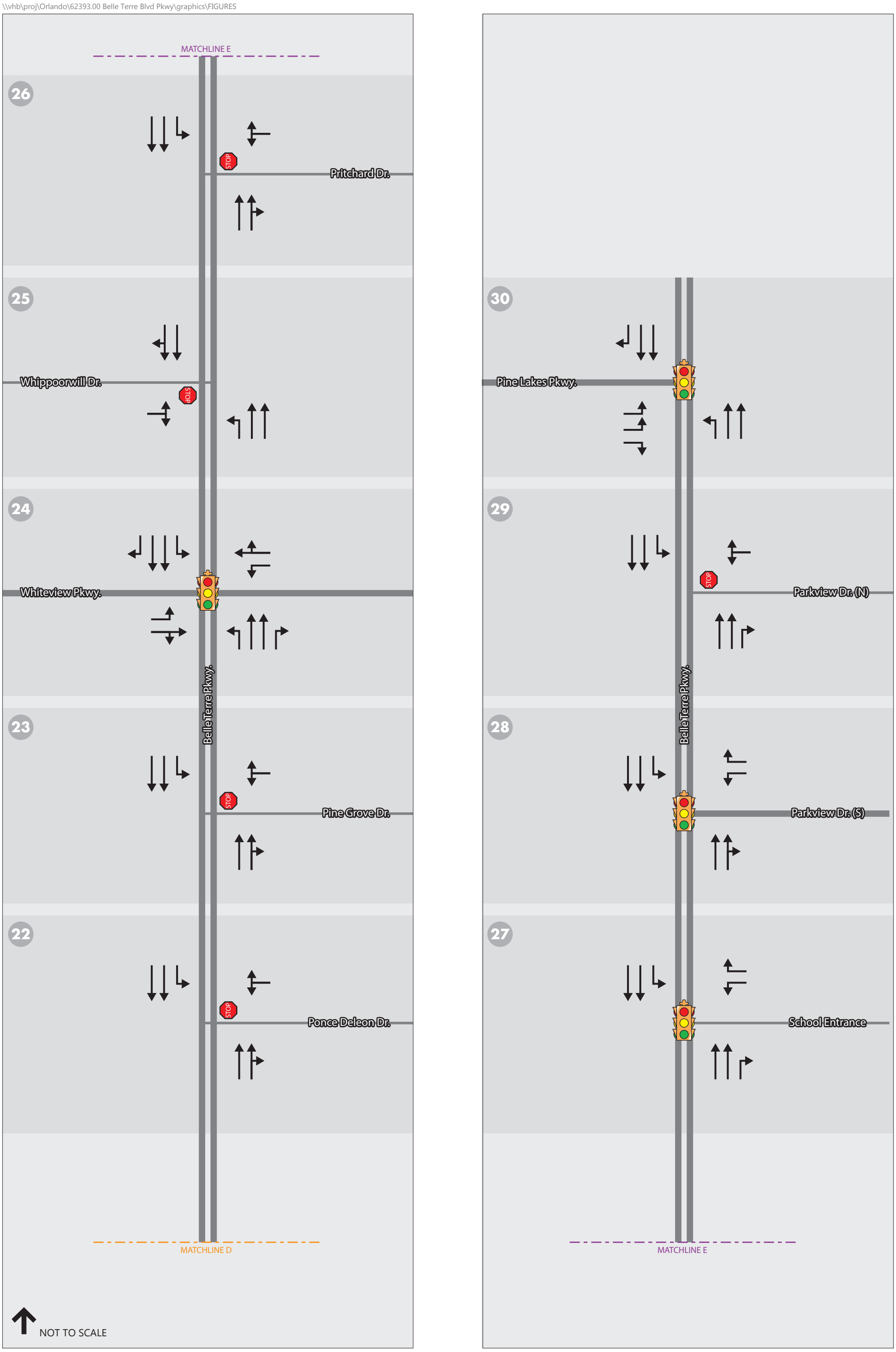

Lane Geometry

Stop-Controlled Intersection

Signalized Intersection

Figure 3C

Existing Year 2015 Geometry

3.3 Existing Traffic Volumes

Collected traffic count information was used to develop existing traffic characteristics for the project corridors and the intersecting side streets. The truck factors for the peak conditions based on the data collected were used in the existing intersection analyses.

Based on the 24-Hour volume counts and classification counts, peak hour traffic flow (K measured) and, directional split (D measured) for the roadways in the study area were derived. The adjusted AADT volumes for the individual roadway segments are provided in **Table 2**. **Figure 4** provides the existing AADT's for the project corridor and the side streets.

Table 2: Existing Year 2015 Traffic Volumes

Roadway / Segment	Date of Count	Source and Type	FDOT Station No.	Measured Characteristics								Axle Adj.[2]	Seasonal Adj.[1]	Adjusted AADT [3]
				ADT	Peak Hr.	NB/EB	SB/WB	Peak Time	"K"	"D"	"T_{Daily}"			
Mainline Characteristics (Belle Terre Blvd/Pkwy)														
Belle Terre Blvd														
N. of SR 5/US 1	2014	FDOT Classification	738004	-	-	-	-	-	9.0%	62.5%	7.0%	-	-	3,200 [4]
US 1 to SR 100/Moody Blvd	2014	FDOT Classification	737002	-	-	-	-	-	9.0%	62.5%	2.2%	-	-	5,200 [4]
From SR 5/US 1 to Citation Blvd	2/3/2015	City of Palm Coast 24-hr Class	-	3,644	359	219	140	5:00 - 6:00 PM	9.9%	61.0%	2.0%	-	1.06	3,900
From Citation Blvd to Zaun Trail	2/3/2015	City of Palm Coast 24-hr Class	-	5,205	510	236	274	4:45 - 5:45 PM	9.8%	53.7%	1.8%	-	1.06	5,500
From Zaun Trail to Zebulah's Trail	2/3/2015	City of Palm Coast 24-hr Class	-	5,628	555	251	304	4:45 - 5:45 PM	9.9%	54.8%	1.7%	-	1.06	6,000
From Zebulah's Trail to SR 100	2/3/2015	City of Palm Coast 24-hr Class	-	6,784	651	280	371	4:45 - 5:45 PM	9.6%	57.0%	1.6%	-	1.06	7,200
Belle Terre Pkwy														
N. of SR 100/Moody Blvd		FDOT Classification	738024	-	-	-	-	-	9.0%	62.5%	7.0%	-	-	23,500 [4]
From SR 100 to Easthampton Blvd	1/13/2015	City of Palm Coast 24-hr Vol	-	23,264	1,994	1201	793	4:45 - 5:45 PM	8.6%	60.2%	-	0.95	1.10	24,000
From Easthampton Blvd to Royal Palms Pkwy	1/13/2015	City of Palm Coast 24-hr Vol	-	26,097	2,234	1178	1,056	3:30 - 4:30 PM	8.6%	52.7%	-	0.95	1.10	27,000
From Royal Palms Pkwy to Rymfire Dr	1/13/2015	City of Palm Coast 24-hr Vol	-	26,612	2,254	1367	887	4:00 - 5:00 PM	8.5%	60.6%	-	0.95	1.10	28,000
From Rymfire Dr to Whiteview Pkwy	1/13/2015	City of Palm Coast 24-hr Vol	-	24,417	2,089	1184	905	4:30-5:30 PM	8.6%	56.7%	-	0.95	1.10	26,000
From Whiteview Pkwy to Parkview Dr (S)	1/13/2015	City of Palm Coast 24-hr Vol	-	25,411	2,246	1104	1,142	4:15 - 5:15 PM	8.8%	50.8%	-	0.95	1.10	27,000
From Parkview Dr (S) to Pine Lakes Pkwy	1/8/2015	City of Palm Coast 24-hr Vol	-	25,550	2,179	1161	1,018	3:00 - 4:00 PM	8.5%	53.3%	-	0.95	1.05	25,000
Sidestreet Characteristics														
US 1/SR 5														
N. of Belle Terre Blvd	2014	FDOT Classification	730101	-	-	-	-	-	9.0%	62.5%	9.6%	-	-	9,700 [4]
S. of Belle Terre Blvd	2014	FDOT Classification	730235	-	-	-	-	-	9.0%	62.5%	10.6%	-	-	13,600 [4]
Citation Blvd														
E. of Belle Terre Blvd	2014	FDOT Classification	738008	-	-	-	-	-	9.0%	62.5%	7.0%	-	-	400 [4]
SR 100														
W. of Belle Terre Blvd	2014	FDOT Classification	730054	-	-	-	-	-	9.0%	62.5%	9.5%	-	-	13,900 [4]
E. of Belle Terre Blvd	2014	FDOT Classification	730002	-	-	-	-	-	9.0%	62.5%	7.8%	-	-	19,600 [4]
Easthampton Blvd														
W. of Belle Terre Pkwy	2014	FDOT Classification	738011	-	-	-	-	-	9.0%	62.5%	7.0%	-	-	5,500 [4]
Royal Palms Parkway														
W. of Belle Terre Pkwy	2014	FDOT Classification	738007	-	-	-	-	-	9.0%	62.5%	7.0%	-	-	4,500 [4]
E. of Belle Terre Pkwy	2014	FDOT Classification	738013	-	-	-	-	-	9.0%	62.5%	7.0%	-	-	5,400 [4]
Rymfire Dr														
W. of Belle Terre Pkwy	2014	FDOT Classification	738014	-	-	-	-	-	9.0%	62.5%	7.0%	-	-	2,700 [4]
Whiteview Parkway														
W. of Belle Terre Pkwy	2014	FDOT Classification	738016	-	-	-	-	-	9.0%	62.5%	7.0%	-	-	5,400 [4]
Pine Lake Parkway														
W. of Belle Terre Pkwy	2014	FDOT Classification	738025	-	-	-	-	-	9.0%	62.5%	7.0%	-	-	3,900 [4]

Notes:

1. Most Recent Seasonal Adjustment factors were obtained from FDOT 2014 Traffic Count Information
2. Most Recent Axle Adjustment factors were obtained from FDOT 2014 Traffic Count Information
3. Adjusted AADT = Measured ADT * Axle Adjustment * Seasonal Adjustment
4. AADT obtained from FDOT Transportation Information DVD 2014

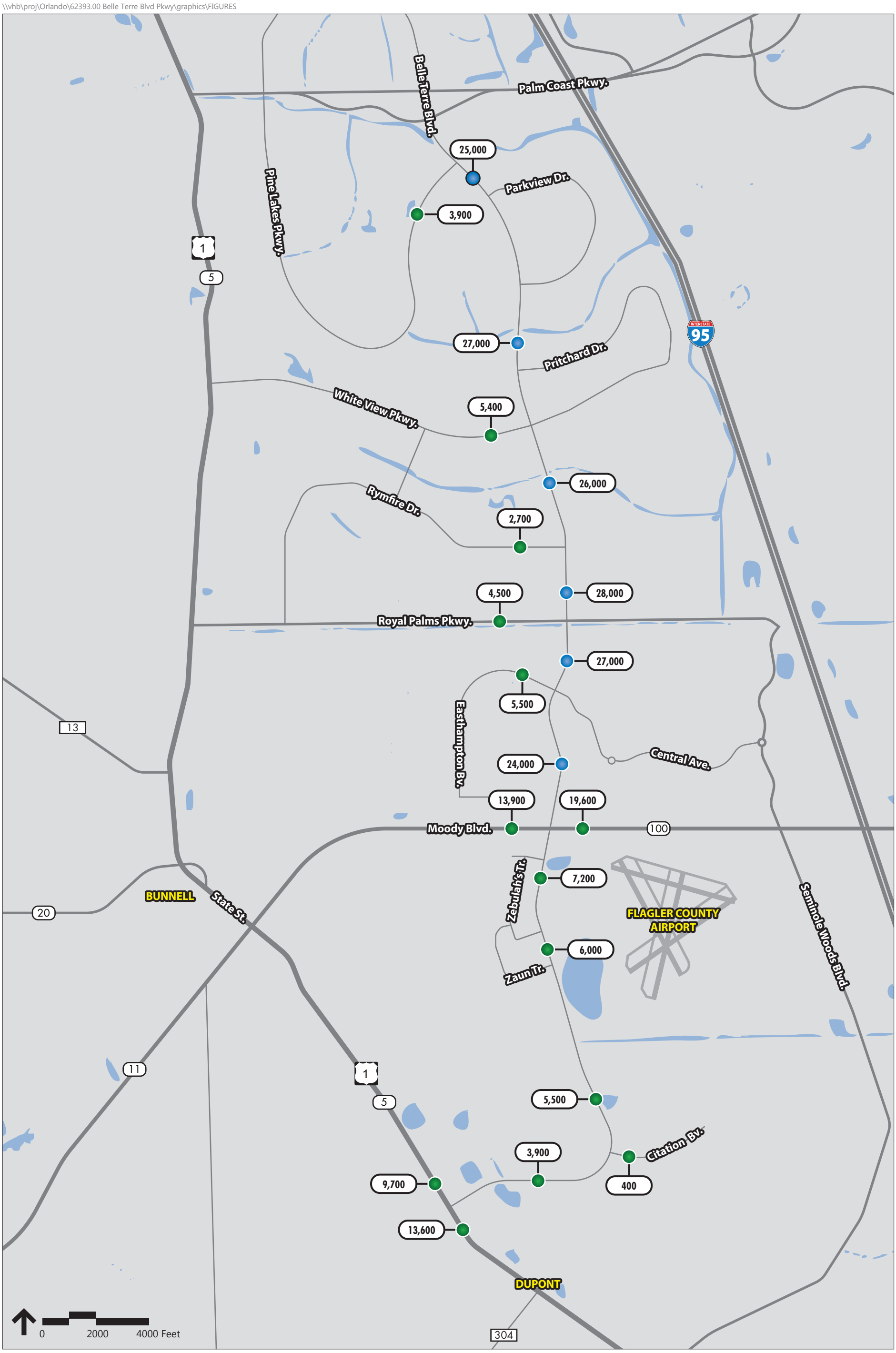

Volume Count Location

Classification Count Location

X,XXX Annual Average Daily Traffic (AADT)

Figure 4

Annual Average Daily Traffic (AADT)

3.4 Year 2015 Turning Movement Counts

Turning movement counts were obtained for the AM and PM peak hour conditions for the 30 intersections along the project corridor. The actual year 2015 AM and PM peak hour turning movement volumes collected at the study intersections are shown in **Appendix E**. It should be noted that the raw turning movement counts were adjusted by the seasonal factor (1.04) to account for seasonal variations. In addition, the turning movement counts were balanced between the intersections where there are no access points in between. The year 2015 AM and PM peak hour turning movement volumes for the study corridor after seasonal adjustment are shown in **Figure 5A through 5C**.

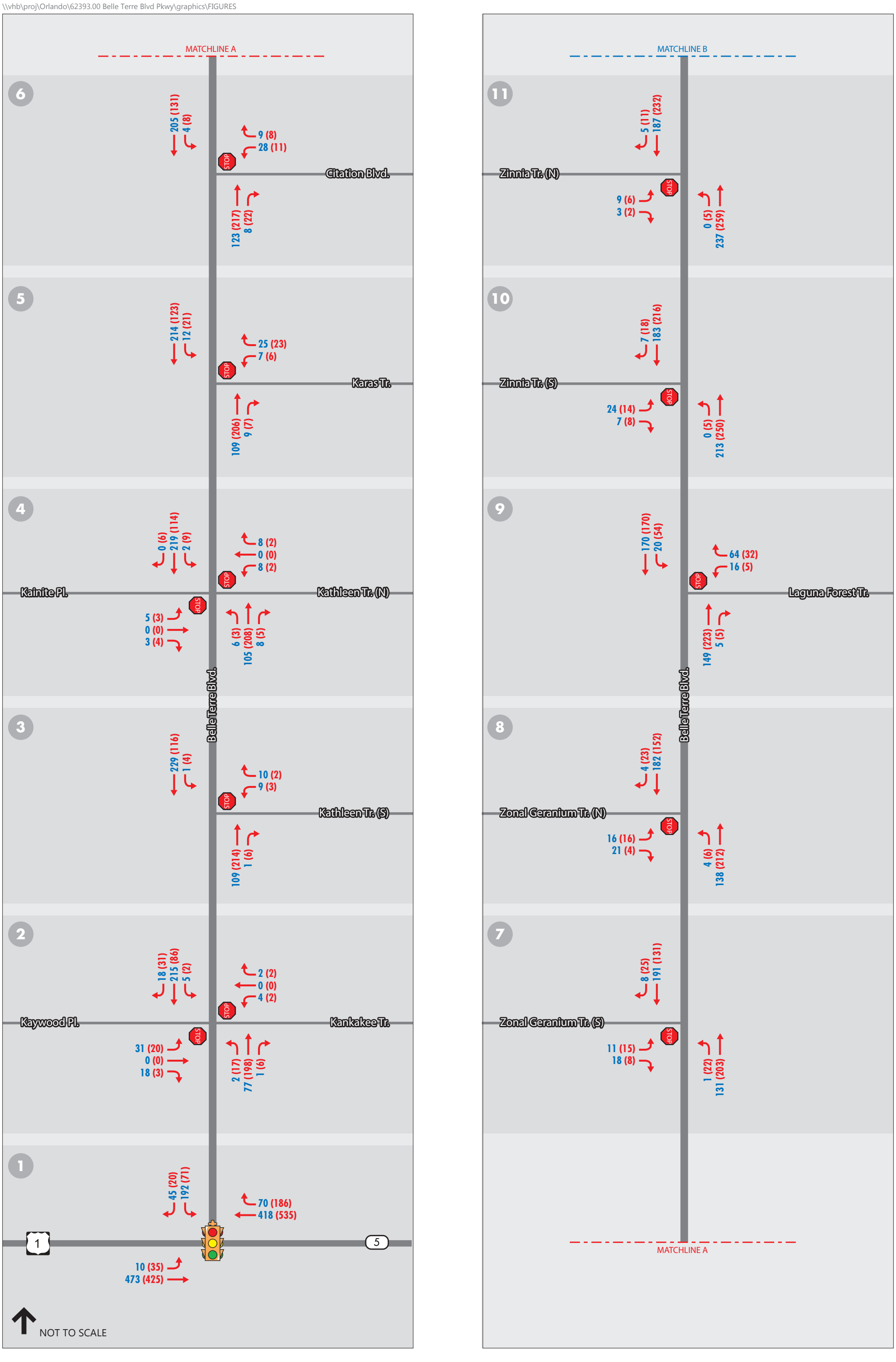

Traffic Movement

AM (PM) Traffic Volumes

Stop-Controlled Intersection

Signalized Intersection

Figure 5A

Existing Year 2015
Turning Movement Volumes

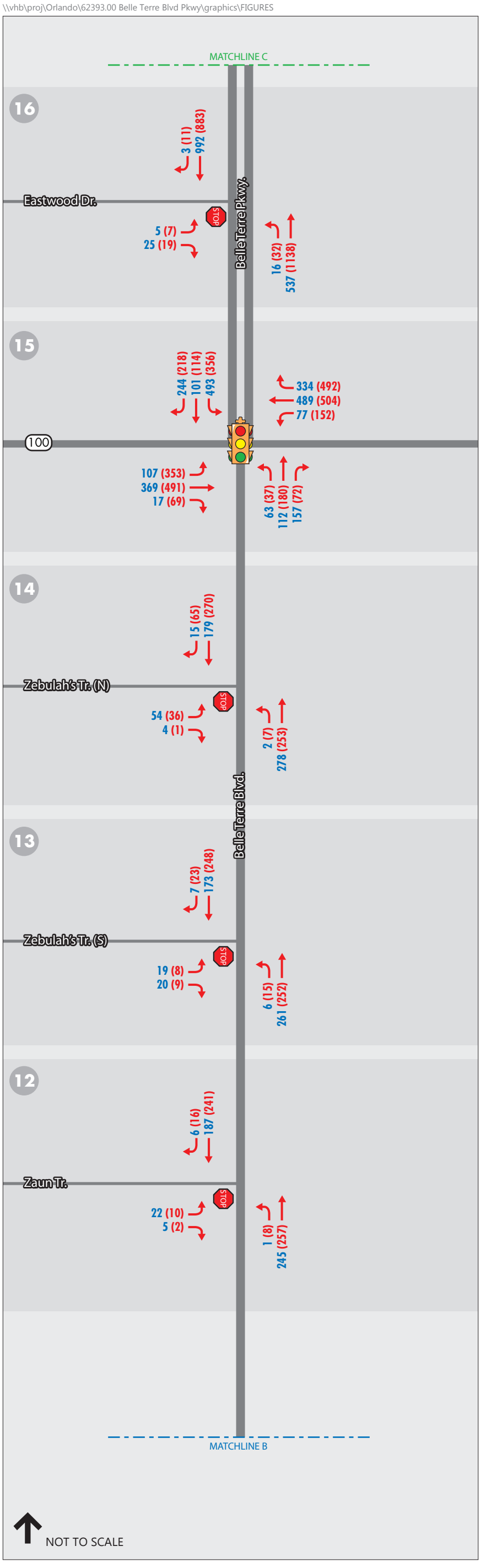

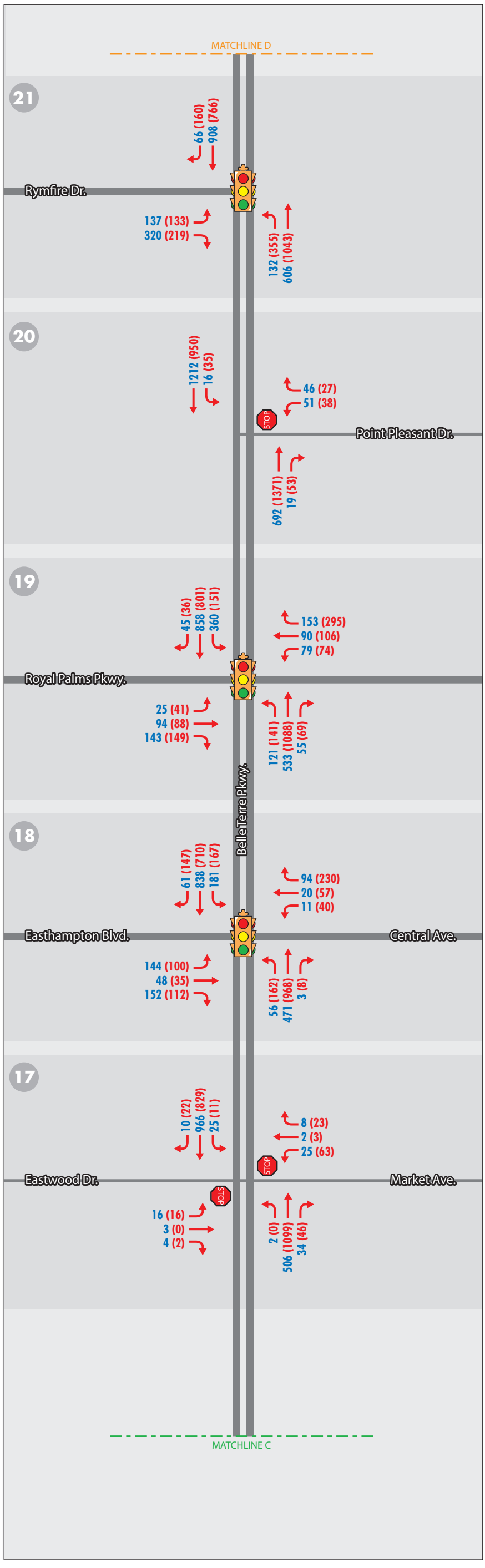

Traffic Movement

AM (PM) Traffic Volumes

Stop-Controlled Intersection

Signalized Intersection

Figure 5B

Existing Year 2015
Turning Movement Volumes

Traffic Movement

AM (PM) Traffic Volumes

Stop-Controlled Intersection

Signalized Intersection

Figure 5C

Existing Year 2015
Turning Movement Volumes

3.5 Year 2015 LOS Analysis

Levels of service for the study corridors were determined using Synchro software version 8.0. Specific analysis techniques utilized in the study include the Synchro signalized and HCM 2010 unsignalized intersections. The outputs from Synchro were presented as results for the intersection LOS analyses. According to Exhibit 18-4 (page 18-6) of Highway Capacity Manual (HCM 2010), an average control delay per vehicle from 55 seconds up to 80 seconds is considered LOS E condition and beyond 80 seconds is considered LOS F condition at a signalized intersection.

The year 2015 AM and PM peak hour turning movement volumes along with the year 2015 intersection geometry were used in the intersection LOS analysis. The signal timing data provided by the City of Palm Coast were used in the intersection LOS analysis for signalized intersections.

A summary of LOS analysis for the study intersections is included in **Table 3**. As shown in **Table 3**, during the year 2015 AM and PM peak hour conditions, all the signalized and unsignalized intersections within the study limits of the Belle Terre Blvd/Pkwy are currently operating above the standard LOS D, with the exception of the minor approaches of the intersection at Belle Terre Pkwy at Eastwood Dr/Market Ave and Belle Terre Pkwy at Pine Grove Dr, which were found to operate below LOS D. The base year 2015 AM and PM peak hour Synchro intersection analysis outputs along with the signal timing data are included in **Appendix G**.

Table 3: Existing Year 2015 Intersection LOS Analysis Summary

#	Study Intersection	Traffic Control	AM Peak Hour		PM Peak Hour	
			Delay (sec)	LOS	Delay (sec)	LOS
1	SR5/ US 1	Signal	13.7	B	11.0	B
2	Kaywood Pl/Kankakee Trail	Stop	7.7/11.1	A/B	7.7/11.1	A/B
3	Kathleen Trail (S)	Stop	7.4/9.9	A/A	7.7/10.3	A/B
4	Kathleen Trail (N)	Stop	7.7/10.9	A/B	7.7/10.3	A/B
5	Karas Trail	Stop	7.5/9.7	A/A	7.8/10.1	A/B
6	Citation Blvd	Stop	8.1/10.8	A/B	7.7/10.5	A/B
7	Zonal Geranium Trail (S)	Stop	7.6/10.1	A/B	7.6/10.6	A/B
8	Zonal Geranium Trail (N)	Stop	7.7/10.4	A/B	7.6/10.9	A/B
9	Laguna Forest Trail	Stop	7.6/10.5	A/B	7.8/10.2	A/B
10	Zinnia Trail (S)	Stop	0.0/11.5	A/B	7.7/11.4	A/B
11	Zinnia Trail (N)	Stop	0.0/11.4	A/B	7.7/11.5	A/B
12	Zaun Trail	Stop	7.7/11.9	A/B	7.8/12.0	A/B
13	Zebulah's Trail (S)	Stop	7.8/11.0	A/B	7.8/11.2	A/B
14	Zebulah's Trail (N)	Stop	7.7/13.0	A/B	8.0/13.5	A/B
15	SR 100	Signal	46.1	D	48.7	D
16	Eastwood Dr	Stop	12.0/15.6	B/C	10.5/14.8	B/B
17	Eastwood Dr/Market Ave	Stop	10.8/28.3	B/D	11.0/41.5	B/E
18	Easthampton Blvd/Central Ave	Signal	25.0	C	28.7	C
19	Royal Palms Pkwy	Signal	32.3	C	36.7	D
20	Point Pleasant Dr	Stop	9.5/19.0	A/C	13.5/33.1	B/D
21	Rymfire Dr	Signal	14.8	B	14.2	B
22	Ponce Deleon Dr	Stop	9.5/16.7	A/C	12.1/24.8	B/C
23	Pine Grove Dr	Stop	9.7/29.8	A/D	12.3/38.3	B/E
24	Whiteview Pkwy	Signal	19.6	B	19.5	B
25	Whippoorwill Dr	Stop	9.8/19.8	A/C	11.3/24.7	B/C
26	Pritchard Dr	Stop	11.0/23.6	B/C	11.3/20.3	B/C
27	School Entrance	Signal	8.1	A	6.2	A
28	Parkview Dr (S)	Signal	15.5	B	8.5	A
29	Parkview Dr (N)	Stop	13.7/29.1	B/D	11.8/20.8	B/C
30	Pine Lakes Pkwy	Signal	15.8	B	15	B

4 Development of Design Characteristics

The design traffic characteristics established in this section will be used in developing design hour volumes (DHV's) for the intersections and directional design hour volumes (DDHV's) for the roadway segments for the future conditions. These characteristics are determined based on the procedures outlined in the FDOT's Project Traffic Forecasting Handbook, 2014.

4.1 Standard K Factor

Based on the recent directions from the FDOT District Office, a Standard K Factor of 9.0% for urban areas was used for the study corridors including Belle Terre Blvd/Pkwy and the intersecting roadways.

4.2 D Factor

The D factor represents the directional factor occurring in the traffic flow during the highest hour. In determining this factor for Belle Terre Blvd/Pkwy and the side streets, statewide and national guidelines were compared to the field collected traffic counts and traffic information contained in the latest available Florida Transportation Information (FTI) DVD.

The measured D for the study area roadways including the peak directions are shown in **Table 2.** The average of the measured D factors for Belle Terre Blvd/Pkwy corridor within the study limits is 56.1%. There were no measured counts along the side streets.

Table 4 illustrates the historical D factors from four FDOT count stations along Belle Terre Blvd/ Pkwy. The factors were obtained for five years from year 2010 to 2014. The average, minimum and maximum D factors over the five years for Belle Terre Blvd/Pkwy corridor are 61.40%, 60.70% and 62.50%, respectively. For the side streets, the average, minimum and maximum D factors over the five years are 60.62%, 57.48% and 62.50% respectively.

Table 5 provides the current recommended range of D values from the FDOT Project Traffic Forecasting Handbook (2014) and the Highway Capacity Manual for an urban arterial.

Table 4: Historical FTI Data - D Values

Year	Station 738004	Station 737002	Station 738024	Station 730101	Station 730054	Station 730002
	Belle Terre Blvd/Pkwy			Side Streets		
2010	-	-	-	57.48%	57.48%	57.48%
2011	61.50%	-	61.50%	61.50%	61.50%	61.50%
2012	60.90%	60.90%	60.90%	60.90%	60.90%	60.90%
2013	60.70%	60.70%	60.70%	60.70%	60.70%	60.70%
2014	62.50%	62.50%	62.50%	62.50%	62.50%	62.50%
Average	**61.40%**	**61.40%**	**61.40%**	**60.62%**	**60.62%**	**60.62%**
Minimum	**60.70%**	**60.70%**	**60.70%**	**57.48%**	**57.48%**	**57.48%**
Maximum	**62.50%**	**62.50%**	**62.50%**	**62.50%**	**62.50%**	**62.50%**

Table 5: Recommended Range of D Values

Area & Highway Type	Values	Source	
		FDOT[1]	HCM[2]
Urban Arterial	Low	50.8%	52.0%
	Average	57.9%	54.5%
	High	67.1%	57.0%

Notes:
1) Source: FDOT Project Traffic Forecasting Handbook, January 2014, Figure 2.9
2) Source: HCM 2010

4.2.1 Belle Terre Blvd/Pkwy Corridor

The average measured D from the 2014 traffic counts and historical D factors is 58.8%. Therefore, being conservative without overestimating future design traffic volumes, **a D factor of 58.8% (average of historical and measured values) is recommended for the Belle Terre Blvd/Pkwy corridor.**

4.2.2 Side Streets

For purposes of this study, the average D value from the FTI traffic counts will be used for the side street as recommended D factors. Therefore, on the side streets, a D-factor of 60.62% is recommended.

4.3 T_{daily} & T_{peak} Factors

The daily truck factor, T_{daily} represents the percentage composition of medium sized and heavy trucks occurring in the traffic stream for a 24-hour period. The peak hour truck factor, T_{peak}, is the percentage of truck traffic during the peak hour and is recommended as one-half of the T_{daily} factor in the Project Traffic Forecasting Handbook.

The year 2015 measured T_{daily} factors for the study corridor are shown in **Table 2.** An average T_{daily} factor of 1.8%was measured for the Belle Terre Blvd/Pkwy corridor.

Table 6 contains the historical T_{daily} factors from the FTI DVD for the five years from 2010 to 2014. The average, minimum and maximum T_{daily} factors over the five years for Belle Terre Blvd/Pkwy corridor are shown in the table.

Table 6: Historical FTI Data - T_{daily} Values

Year	Station 738004	Station 737002	Station 738024
	Belle Terre Blvd/Pkwy		
2010	-	5.40%	-
2011	6.50%	6.50%	6.50%
2012	6.20%	1.30%	6.20%
2013	6.60%	1.30%	6.60%
2014	7.00%	2.20%	7.00%
Average	**6.58%**	**3.34%**	**6.58%**
Minimum	**6.20%**	**1.30%**	**6.20%**
Maximum	**7.00%**	**6.50%**	**7.00%**

4.3.1 Belle Terre Blvd/Pkwy Corridor

The average of measured T_{daily} from the 2015 traffic counts and historical T_{daily} factors is 3.3%**.** A T_{daily} **(T_{peak})** factor of **3.3% (1.65%)** is recommended for the Belle Terre Blvd/Pkwy corridor, based on the existing count information.

4.3.2 Side Streets

For the purposes of this study, the measured truck factor values from the 2015 traffic counts will be used for all the side streets.

4.4 Recommended Design Traffic Characteristics

Based on the afore-mentioned discussions, the following **Table 7** provides a summary of the recommended design traffic characteristics for this study.

Table 7: Recommended Design Traffic Characteristics

Roadway / Segment	Recommended Design Characteristics			
	Standard "K" Factor	"D" Factor	"T_{daily}" Factor	"T_{peak}" Factor
	Mainline Characteristics			
Belle Terre Blvd/Pkwy	9.0%	58.8%	3.3%	1.65%
	Side Street Characteristics			
All side streets	9.0%	60.62%	-	Existing

Note: Truck factors obtained from Year 2015 TMC will be used for future conditions

5 Crash Data Review

The latest three (3) years of crash data (from September 1, 2012 to September 1, 2015) along the Belle Terre Blvd/Pkwy were obtained from the Florida Signal Four Analytics. A total of 265 crashes occurred within the study limits in the last three years. A copy of the raw data is included in **Appendix H**.

5.1 Crash Summary by Year and Conditions

Table 8 show the summary of the crashes by year (September 2012 – September 2015). On average, about 88 crashes occurred per year for the last three years within the study limits. 6 of them were fatal crashes and 146 were crashes resulting in injuries. A total of 60 crashes (about 23% of total) were reported to have occurred during dark conditions (at night, dawn or dusk), averaging about 20 crashes per year. Also, 39 of the total 265 crashes occurred in wet weather conditions.

All nine signalized intersections have lighting present. About 33% of all the total crashes within the segment between US 1 and SR 100 occurred at dark conditions, and about 21% of all the total crashes within the segment between SR 100 and Pine Lakes Pkwy occurred at dark conditions. Belle Terre Blvd/Pkwy have roadway lighting present along the west side of the roadway as well as at all the signalized intersections.

Table 8: Crash Summary by Severity and Conditions (Sept 2012-Sept 2015)

Year	Total Number of Crashes	Injury Crashes	Fatal Crashes	Dark Conditions Crashes	Wet Conditions Crashes
2012	23	15	1	8	4
2013	87	52	1	16	15
2014	91	45	3	21	10
2015	64	34	1	15	10
2012-2015	**265**	**146**	**6**	**60**	**39**
Average	**88.33**	**48.67**	**2**	**20**	**13**
Percent	**-**	**55.09%**	**2.26%**	**22.64%**	**14.72%**

As shown in **Table 9**, the intersection of Belle Terre Blvd/Pkwy and SR 100 had the most number of crashes (50 crashes) among the 30 intersections, accounting for about 19% of the entire study corridor crashes. The other intersections along Belle Terre Blvd/Pkwy with 15 or more crashes for the last 3 years are: Royal Palms Pkwy (signal) - 30 crashes, Easthampton Blvd/Central Ave (signal) - 27 crashes, Pines Groves Dr (stop) – 20 crashes, Pine Lakes Pkwy (signal) and Eastwood Dr/Market Ave (stop) - each 19 crashes, and Whiteview Pkwy (signal) - 18 crashes.

Table 9: Crash Summary by Intersections (Sept 2012-Sept 2015)

#	Intersection	Total	Fatal	Injury	Property Damage Only	Night	Wet
1	US 1 (signal)	**6**	0	2	4	2	1
2	Kaywood Pl/Kankakee Trail (stop)	**1**	0	1	0	0	0
3	Kathleen Trail (S) (stop)	**1**	0	1	0	1	0
4	Kathleen Trail (N) (stop)	**0**	0	0	0	0	0
5	Karas Trail (stop)	**2**	0	1	1	0	1
6	Citation Blvd (stop)	**4**	0	3	1	4	1
7	Zonal Geranium Trail (stop)	**0**	0	0	0	0	0
8	Zonal Geranium Trail (N) (stop)	**1**	0	1	0	0	0
9	Laguna Forest Trail (stop)	**2**	0	2	0	0	0
10	Zinnia Trail (S) (stop)	**0**	0	0	0	0	0
11	Zinnia Trail (N) (stop)	**0**	0	0	0	0	0
12	Zaun Trail (stop)	**3**	0	1	2	1	1
13	Zebulah's Trail (S) (stop)	**6**	0	5	1	1	3
14	Zebulah's Trail (N) (stop)	**1**	0	1	0	0	0
15	SR 100 (signal)	**50**	1	28	22	11	11
16	Eastwood Dr (stop)	**0**	0	0	0	0	0
17	Eastwood Dr/Market Ave (stop)	**19**	0	7	12	8	1
18	Easthampton Blvd/Central Ave (signal)	**27**	0	10	17	2	3
19	Royal Palms Pkwy (signal)	**30**	2	16	12	6	2
20	Point Pleasant Dr (stop)	**8**	0	4	4	2	1
21	Rymfire Dr (signal)	**13**	0	9	4	1	2
22	Ponce Deleon Dr (stop)	**10**	0	9	1	3	4
23	Pine Grove Dr (stop)	**20**	2	12	7	2	1
24	Whiteview Pkwy (signal)	**18**	1	7	11	2	2
25	Whippoorwill Dr (stop)	**7**	0	5	2	3	0
26	Pritchard Dr (stop)	**2**	0	2	0	0	0
27	School Entrance (signal)	**1**	0	1	0	0	0
28	Parkview Dr (S) (signal)	**0**	0	0	0	0	0
29	Parkview Dr (N) (stop)	**14**	0	6	8	3	3
30	Pine Lakes Pkwy (signal)	**19**	0	12	7	8	2
Total		**265**	**6**	**146**	**116**	**60**	**39**

Following is a summary of the types of crashes at these intersections with 15 or more crashes for the last three years.

Belle Terre Blvd/Pkwy and SR 100: This signalized intersection experienced 50 crashes in the last three years, averaging about 17 crashes per year. Majority of these crashes were rear-end crashes (42% of total), followed by "other" (24% of total) and left-turn (10% of total) crashes. 3 bicycle and 1 pedestrian related crashes were reported for this intersection. The pedestrian related crash occurred at the southeast corner of the intersection where no crosswalk is available. All the bicycle related crashes occurred at the north leg with bicyclists crossing the Belle Terre Pkwy along the crosswalk. Crosswalks are available across the west and north legs of the intersection. In addition, 1 fatal crash was reported for this intersection.

Belle Terre Pkwy and Royal Palms Pkwy: This signalized intersection experienced 30 crashes in the last three years, averaging 10 crashes per year. Majority of these crashes were rear-end crashes (70% of total), followed by "other" (10% of total), left-turn (10% of total) crashes. No bicycle or pedestrian related crashes were reported for this intersection. Crosswalks are present at all four legs of this intersection. 2 fatal crashes were reported for this intersection.

Belle Terre Pkwy and Easthampton Blvd/Central Ave: This signalized intersection experienced 27 crashes in the last three years, averaging 9 crashes per year. Majority of these crashes were rear-end crashes (44.4% of total), followed by "other" (37% of total) and sideswipe (11.1% of total) crashes. 1 pedestrian related crash was reported just south of this intersection, in the Publix parking lot. Crosswalks are present at west and north legs of this intersection.

Belle Terre Pkwy and Pine Grove Dr: This stop-controlled intersection experienced 20 crashes in the last three years, averaging about 7 crashes per year. Majority of these crashes were "other" types of crashes (25% of total), followed by left-turn crashes (20% of total), and angle, rear-end and sideswipe (each 15% of total) crashes. 2 bicycle related crashes were reported for this intersection. In both the crashes bicyclists were crossing Pine Grove Dr along the crosswalk and was hit by a westbound to northbound right turning vehicle. Also, 2 fatal crashes were reported at this intersection.

Belle Terre Pkwy and Eastwood Dr/Market Ave: This stop-controlled intersection experienced 19 crashes in the last three years, averaging about 6 crashes per year. Majority of these crashes were

"other" types of crashes (36.8% of total), followed by rear-end crashes (15.8% of total), and angle, left-turn, sideswipe and right-turn (each 10.5% of total) crashes. 1 bicycle related crash was reported for this intersection, occurring while the bicyclist was leaving Publix at Market Ave. The police report, however, was inconclusive to determine whether the bicyclist was crossing Belle Terre Pkwy or Market Ave. Crosswalks are present at east and west legs of the intersection, crossing Eastwood Dr/Market Ave.

Belle Terre Pkwy and Pine Lakes Pkwy: This signalized intersection experienced 19 crashes in the last three years, averaging about 6 crashes per year. Majority of these crashes were "other" types of crashes (36.8% of total), followed by rear-end crashes (31.8% of total), left-turn (15.8% of total) and head-on (10.5% of total) crashes. No pedestrian or bicycle related crashes were reported for this intersection. Crosswalks are present at west and south legs of the intersection.

Belle Terre Pkwy and Whiteview Pkwy: This signalized intersection experienced 18 crashes in the last three years, averaging 6 crashes per year. Majority of these crashes were rear-end crashes (66.7% of total), followed by angle and bicycle related crashes (each 11.1% of total). One bicyclist was crossing the Belle Terre Pkwy, the south leg of the intersection, and was hit by an eastbound to southbound right turning vehicle. Another bicycle crash occurred at the southeast corner with the bicycle crossing the south leg along the crosswalk and was hit by a northbound to eastbound right turning vehicle. No pedestrian related crashes were reported for this intersection. 1 fatal crash was reported for this intersection. There are crosswalks along all three legs of this intersection except the north leg.

Appendix I summarizes the intersections crashes by year and types for all the study intersections.

5.2 Crash Summary by Crash Types

Table 10 shows the summary of the crashes by crash types. According to the summary, rear-end crashes account for the majority of crashes (about 42% of total) within the study corridor, followed by other types (other is defined as types of crashes not present in the table or categorized as "other" in the crash report). Left-turn, angle and sideswipe crashes each account for less than 10% of total crashes within the study corridor for the last three years. 14 bicycle related crashes and 5 pedestrian related crashes were reported in the last three years. None of the bicycle or pedestrian related crashes resulted in any fatalities.

Table 10: Crash Summary by Crash Types (Sept 2012-Sept 2015)

Crash Type	2012	2013	2014	2015	2012-2015	Per year	Percent
Angle	1	3	5	4	13	3.25	4.91%
Rear End	9	40	36	25	110	27.5	41.51%
Head On	0	2	2	0	4	1.00	1.51%
Left Turn	2	8	13	3	26	6.5	9.81%
Sideswipe	0	2	9	5	16	4	6.04%
Pedestrian	1	2	1	1	5	1.25	1.89%
Right Turn	0	1	0	1	2	0.5	0.75%
Bicycle	3	2	5	4	14	3.5	5.28%
Other	7	27	20	21	75	18.75	28.30%
Total	**23**	**87**	**91**	**64**	**265**	**-**	**100.00%**

Of the 6 fatal crashes, 1 occurred at the intersection of Belle Terre Blvd/Pkwy and SR 100, 2 at Belle Terre Pkwy and Royal Palms Pkwy, 2 at Belle Terre Pkwy and Pine Grove Dr, and 1 at the Belle Terre Pkwy and Whiteview Pkwy. A closer look at the crash report for all 6 of the fatal crashes revealed that these crashes were related to careless driving, aggressive driving, or driving under influence.

Appendix I summarizes the types of crashes by year and crash types for each study intersection.

6 Future Traffic Forecast

The development of traffic forecasts for study corridors is not complete without a review of the historical traffic growth, population estimates along the corridor, planned developments in the study area and a review of the future year model forecasts. Due to the specific conditions associated with any roadway, it is necessary to utilize the various methods to compare and in projecting future traffic forecasts (such as trends analysis, population estimates, travel demand models and previous studies) for comparison purposes. The travel demand model applied for this study was based on the latest Central Florida Regional Planning Model, Version 5.01 (CFRPM V5.01). The model based growth rate was used in conjunction with the population growth rate projections published by Bureau of Economic and Business Research (BEBR) to forecast the future traffic volumes. The following sections discuss the various methodologies used in developing future travel demand in the study area.

6.1 Design Period

Based on the latest information provided by City of Palm Coast for this study, a design year of 2030 was used to provide the future traffic forecasts for the study corridor.

6.2 Developments of Regional Impact (DRI)

The growth and development trends within the city was outlined in the published 2014 Annual Report for Growth and Development Trends in the City of Palm Coast. According to the report, six (6) major developments, or Developments of Regional Impact (DRI), are approved within the City and will contribute to the overall growth of the City over the long term (up to 25 years). The following are the four major DRIs that are within the vicinity of the project corridor and can contribute to the traffic growth along the corridor:

1) Palm Coast Park DRI
2) Town Center DRI
3) Neoga Lakes DRI, and
4) Old Brick Township DRI

Appendix J shows the details of the DRIs.

6.3 Historical Traffic Growth

Based on the historic count information obtained from the FDOT, trends analyses were performed for the following FDOT count stations.

- Belle Terre Blvd, north of US-1 (Site 738004)
- Belle Terre Blvd, US-1 to SR 100 (Site 737002)
- Belle Terre Pkwy, north of SR 100 (Site 738024)
- SR 100, east of Belle Terre Blvd/Pkwy (Site 730002)
- SR 100, northeast of US-1 (Site 730054)
- US-1, south of SR 11 (Site 730101)
- US-1, north of Old Dixie Highway (Site 730235)

Based on this historical data, future growth trends were established by a least square linear regression of the historic counts as shown in **Table 11**. However, due to lack of enough historical years of AADT, Belle Terre Blvd/Pkwy does not show reasonable growth rates, as shown in the table. The same is true for the major side streets. Therefore, the projected growths produced by trends analyses (2014 to design year) were not used in this study. The trend analysis outputs are provided in **Appendix K**.

Table 11: Trends Analysis

Roadway Segment/Station	R^2	Projected Growth
Belle Terre Blvd, north of US-1 (Site 738004)	80.00%	5.08%
Belle Terre Blvd, US-1 to SR 100 (Site 737002)	73.25%	11.81%
Belle Terre Pkwy, north of SR 100 (Site 738024)	80.00%	0.85%
SR 100, east of Belle Terre Blvd/Pkwy (Site 730002)	43.24%	-2.83%
SR 100, northeast of US-1 (Site 730054)	41.00%	0.94%
US-1, south of SR 11 (Site 730101)	0.03%	0.13%
US-1, north of Old Dixie Highway (Site 730235)	17.53%	1.51%

6.4 Flagler County Population Projections

In addition to the Trends Analyses, population projection obtained from the BEBR (Bulletin 168) published by the University of Florida were used for comparison purposes. **Table 12** shows the year 2013 population data and the high and medium population estimates for the Year 2030 along with the corresponding growth rates. Based on **Table 12**, the high and medium population estimates obtained from the BEBR reported an annual growth rate of 6.10% and 3.78% per year, respectively. The BEBR population projection data are provided in **Appendix L**.

Table 12: Population Analysis – BEBR Estimates

Projection Type	2013	2030	Annual Growth Rate
Flagler - Medium Projection	97,843	160,700	3.78%
Flagler - High Projection	97,843	199,300	6.10%

6.5 Travel Demand Model

The CFRPM model based traffic projections for the 2030 were assessed for their reasonableness. The socioeconomic data were updated in the 2030 model for the Traffic Analysis Zones (TAZ) encompassing the DRIs mentioned in **Section 6.2**. The changes were made based on the DRI entitlements listed in the 2014 Annual DRI Report (see **Appendix J**) and inputs from the City. In addition, the 2030 model network was checked and updated based on the programmed improvements listed within the project vicinity in the R2CTPO Transportation Improvement Program (TIP) FY 2019/20. The following programmed improvement was added to the 2030 network:

- Old Kings Road Extension- Phase II (extend Old Kings Road northward from Matanzas Woods Parkway to Old Kings Road) – construction phase funded for 2015/16.

The model AADTs shown in the **Table 13** for the year 2030 were obtained by multiplying the model PSWADT with a Model Output Conversion Factor (MOCF) of 0.94. **Appendix M** provides the model plot and MOCF.

Table 13: Growth Rate between Existing (2015) AADT and 2030 Model AADT

Roadway / Segment	Existing Year (2015) AADT	CFRPM Year (2030) PSWADT	CFRPM Year (2030) AADT	Growth Rate (Linear)
Mainline Characteristics				
Belle Terre Blvd				
SR 5/US 1 to Citation Blvd	3,900	11,163	10,493	11.27%
Citation Blvd to Zaun Tr	5,500	11,237	10,563	6.14%
Zaun Tr. To Zebulah Tr	6,000	11,887	11,174	5.75%
Zebulah's Tr to SR 100	7,200	14,889	13,996	6.29%
			Average	**7.36%**
Belle Terre Pkwy				
SR 100 to Royal Palms Pkwy	24,000	37,925	35,650	3.24%
Royal Palms Pkwy to Rymfire Dr	28,000	38,569	36,255	1.97%
Rymfire Dr to Whiteview Pkwy	26,000	31,762	29,856	0.99%
Whiteview Pkwy to Pine Lakes Pkwy	25,000	31,694	29,792	1.28%
			Average	**1.87%**
Cross Street Characteristics				
SR 5/US 1 North of Belle Terre Blvd	9,700	55,883	52,530	29.44%
SR 5/US 1 South of Belle Terre Blvd	13,600	61,255	57,580	21.56%
SR 100 West of Belle Terre Blvd	13,900	16,262	15,286	0.66%
SR 100 East of Belle Terre Blvd	19,600	25,853	24,302	1.60%
Royal Palms Pkwy West of Belle Terre Pkwy	4,500	9,288	8,731	6.27%
Rymfire Dr West of Belle Terre Pkwy	2,700	10,488	9,859	17.68%
Whiteview Pkwy West of Belle Terre Pkwy	5,400	9,137	8,589	3.94%
Pine Lakes Pkwy West of Belle Terre Pkwy	3,900	7,818	7,349	5.90%

Note: PSWADTs were converted to AADTs by MOCF of 0.94

Based on **Table 13**, annual average growth rate of 7.36% per year between the existing year 2015 and the model year 2030 was exhibited along Belle Terre Blvd, and annual average growth rate of 1.87% per year was exhibited along Belle Terre Pkwy. The major cross streets US 1, SR 100, Royal Palms Pkwy, Rymfire Dr, Whiteview Pkwy and Pine Lakes Pkwy showed annual average growth rates of 25.50%, 1.13%, 6.27%, 17.68%, 3.94% and 5.90%, respectively.

6.6 Recommended Growth Rates

The growth rates obtained from CFRPM model and population estimates were compared to calculate the recommended growth rates. Based on these analysis and input from the City and R2CTPO, a growth rate of 5.5% for Belle Terre Blvd is recommended between year 2015 and 2030, which is an average of the model growth rate of 7.36% and BEBR medium projection of 3.78%. Annual growth rate of 1.9% (based on CFRPM model) per year is recommended for Belle Terre Pkwy.

For US 1, the model shows an unusually high growth rate. Therefore, Flagler county population growth rate (high projection) of 6.1% is recommended for US 1. Simple annual growth rates of 1.60%, 6.27%, 17.68%, 3.94% and 5.90% (based on CFRPM model) are recommended for developing future traffic projections on SR 100, Royal Palms Pkwy, Rymfire Dr, Whiteview Pkwy and Pine Lakes Pkwy, respectively between existing year 2015 and future year 2030. The growth rate recommendations are provided in **Table 14.**

A select link analysis for a segment along Belle Terre Blvd between Citation Blvd and SR 100. The results of the analysis (PSWADTs and percentages) are provided in **Appendix M**. According to this analysis, majority of the traffic along the Belle Terre Blvd is shown to originate from US-1 (about 61%) and neighborhood adjacent to Belle Terre Blvd (about 33%). The rest of the traffic is originating from the other roadways within the study area.

Table 14: Recommended Growth Rates

Roadway / Segment	(2015-2030)
Mainline	
Bell Terre Blvd	5.50%
Bell Terre Pkwy	1.90%
Side Streets	
US 1	6.10%
SR 100	1.60%
Royal Palms Pkwy	6.27%
Rymfire Dr	17.68%
Whiteview Pkwy	3.94%
Pine Lakes Pkwy	5.90%

The projected AADTs for the design year are shown in **Figure 6**. For the side streets where no existing AADTs are available, the existing turning movement approach volumes were converted to AADTs by a standard K of 9%, before applying the recommended growth rates to forecast the 2030 volume.

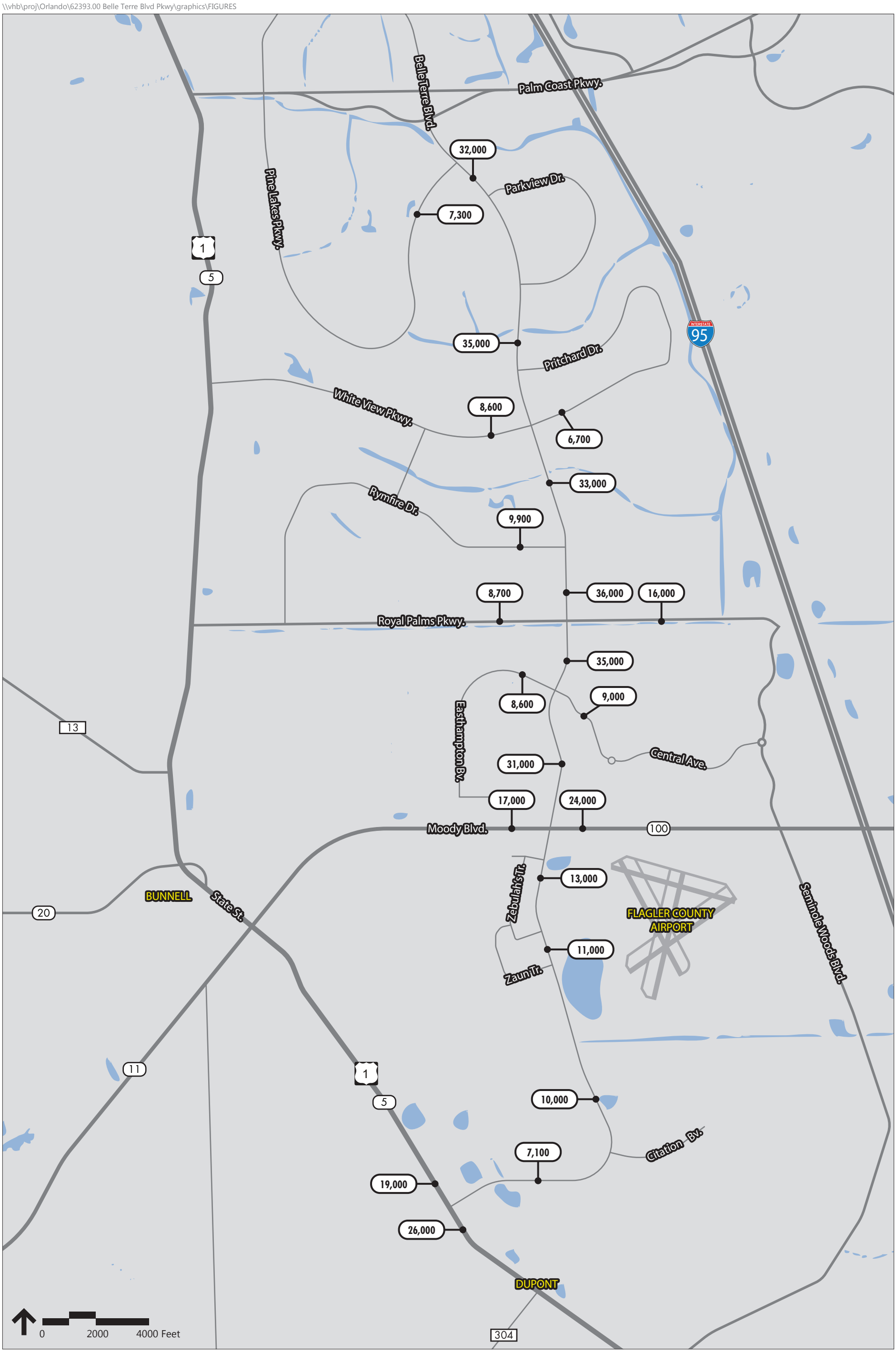

X,XXX Annual Average Daily Traffic (AADT)

Figure 6

Future Year 2030
Annual Average Daily Traffic (AADT)

6.7 Intersection Design Hour Volumes

The existing and future year AADT's for the along with the recommended traffic characteristics were used to develop the design hour volumes (DHVs) for both the AM and PM design hours at the intersections for the opening, mid-design and design years.

The DHV's for the intersections were developed using the TURNS5 spreadsheet, which balances AADT's and calculates DHV's based on Standard K and D factors used as input into the program. The estimated design hour volumes for the AM and PM design hours from TURNS5 spreadsheet were assessed for reasonableness. Adjustments were made and are reported in the TURNS5 output sheets included in **Appendix N**. In general, it was made sure that the design year volumes were higher than the existing peak hour volumes. In addition, to maintain balanced volumes between intersections without any accesses in between, the turning movement forecasts were further adjusted. These adjustments are necessary because accepting an estimated volume that is unrealistically large may lead to over design and accepting an estimated volume that is too small may result in an inadequate design.

The future year AM and PM design hour volumes are shown in **Figures 7A through 7C**.

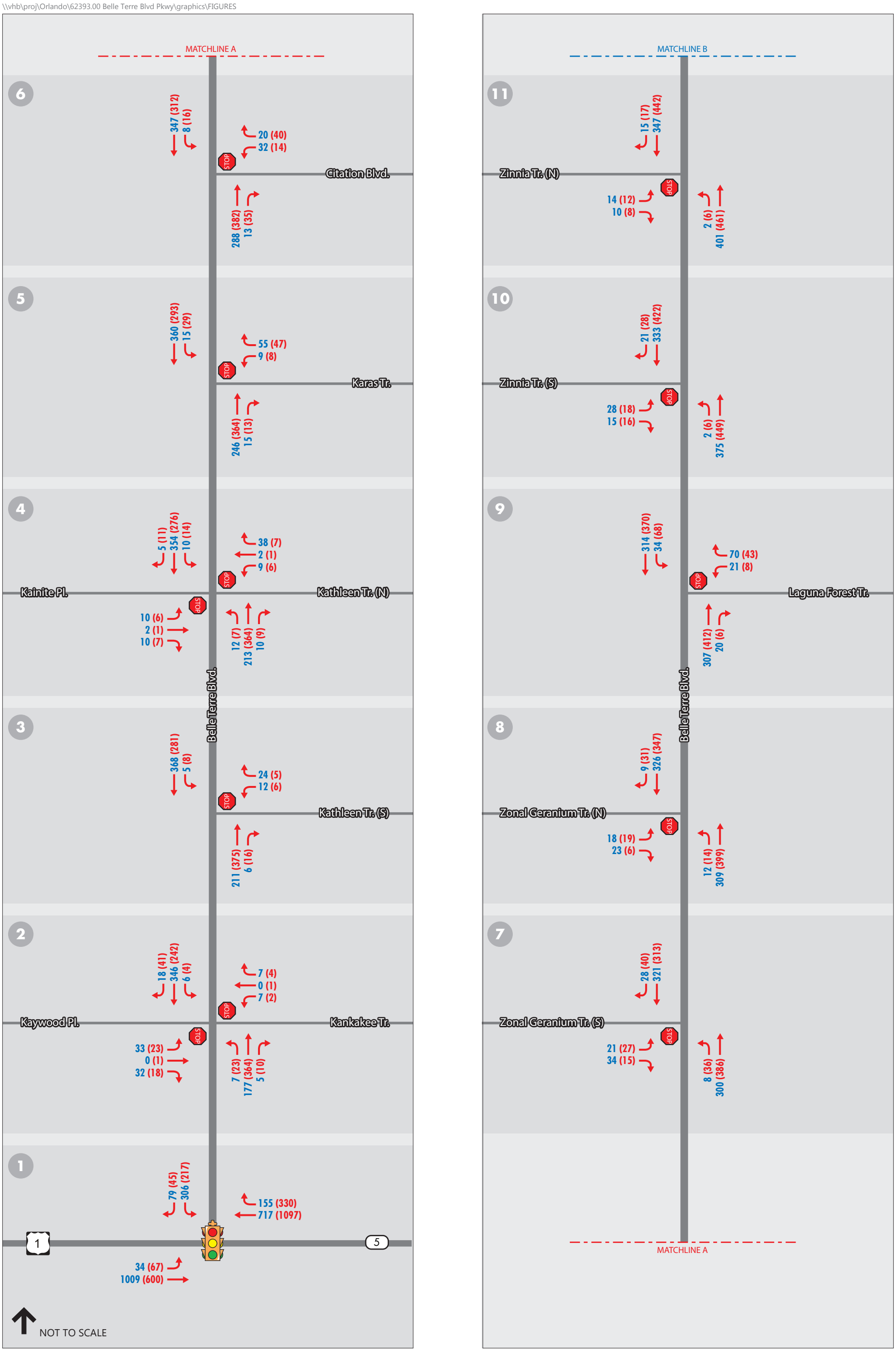

Traffic Movement

AM (PM) Traffic Volumes

Stop-Controlled Intersection

Signalized Intersection

Figure 7A

Future Year 2030
Turning Movement Volumes

Traffic Movement

AM (PM) Traffic Volumes

Stop-Controlled Intersection

Signalized Intersection

Figure 7B

Future Year 2030
Turning Movement Volumes

Traffic Movement

AM (PM) Traffic Volumes

Stop-Controlled Intersection

Signalized Intersection

Figure 7C

Future Year 2030
Turning Movement Volumes

7 Future Operational Analysis

This section presents the results of the traffic operational analysis for the No Build and Build Alternatives. The intersections level of service for the study corridor were determined using Synchro software version 8.0. Specific analysis techniques utilized in the study include the Synchro signalized and HCM 2010 unsignalized intersections analyses. The outputs from Synchro 8 were presented as results for the intersection LOS analysis. In addition, 95th percentile queue lengths for the signalized intersections are reported based on the Synchro queue results.

7.1 No Build Alternative Operational Analysis

7.1.1 No Build Geometry

The No Build intersection geometry is same as the existing geometry through design year 2030, as shown in **Figures 3A through 3C**.

7.1.2 Intersection Operational Analysis

An intersection operational analysis was performed for the design year for the No Build Alternative for the AM and PM design hours. The results of the intersection analysis, summarized in **Table 15** and the Synchro outputs, is provided in **Appendix O**. The No Build analysis shows that without any operational or geometric improvements made, the following intersections along Belle Terre Blvd/Pkwy are expected to operate at LOS E or worse for year 2030:

- Belle Terre Blvd/Pkwy at SR 100 (AM and PM)
- Belle Terre Pkwy at Eastwood Dr/Market Ave - minor approach (AM and PM)
- Belle Terre Pkwy at Easthampton Blvd/Central Ave (PM)
- Belle Terre Pkwy at Royal Palms Pkwy (AM and PM)
- Belle Terre Pkwy at Point Pleasant Dr - minor approach (PM)
- Belle Terre Pkwy at Ponce de leon Dr - minor approach (PM)
- Belle Terre Pkwy at Pine Grove Dr - minor approach (AM and PM)
- Belle Terre Pkwy at Whippoorwill Dr - minor approach (AM and PM)
- Belle Terre Pkwy at Pritchard Dr - minor approach (AM and PM), and
- Belle Terre Pkwy at Parkview Dr (N) - minor approach (AM and PM)

Table 15: Future Year 2030 Intersection LOS Analysis Summary

#	Study Intersection	Traffic Control	AM Design Hour				PM Design Hour			
			No-Build		Build		No-Build		Build	
			Delay (s)	LOS	Delay (s)	LOS	Delay (s)	LOS	Delay (s)	LOS
1	SR5/ US 1	Signal	19.6	B	18.2	B	21.4	C	20.2	C
2	Kaywood Pl/Kankakee Trail	Stop	8.1/13.4	A/B	8.1/13.4	A/B	8.1/14.1	A/B	8.1/14.1	A/B
3	Kathleen Trail (S)	Stop	7.7/10.9	A/B	7.7/10.9	A/B	8.2/12.6	A/B	8.2/12.6	A/B
4	Kathleen Trail (N)	Stop	8.1/13.5	A/B	8.1/13.5	A/B	8.1/13.4	A/B	8.1/13.4	A/B
5	Karas Trail	Stop	7.8/10.8	A/B	7.8/10.8	A/B	8.2/11.7	A/B	8.2/11.7	A/B
6	Citation Blvd	Stop	7.9/13.2	A/B	7.9/13.2	A/B	8.3/12.6	A/B	8.3/12.6	A/B
7	Zonal Geranium Trail (S)	Stop	8.0/12.4	A/B	8.0/12.4	A/B	8.1/15.0	A/C	8.1/15.0	A/C
8	Zonal Geranium Trail (N)	Stop	8.0/12.4	A/B	8.0/12.4	A/B	8.1/15.1	A/C	8.1/15.1	A/C
9	Laguna Forest Trail	Stop	8.1/12.5	A/B	8.1/12.5	A/B	8.4/12.9	A/B	8.4/12.9	A/B
10	Zinnia Trail (S)	Stop	8.0/14.0	A/B	8.0/14.0	A/B	8.3/15.3	A/C	8.3/15.3	A/C
11	Zinnia Trail (N)	Stop	8.1/13.6	A/B	8.1/13.6	A/B	8.4/15.8	A/C	8.4/15.8	A/C
12	Zaun Trail	Stop	8.1/15.2	A/C	8.1/15.2	A/C	8.4/18.1	A/C	8.4/18.1	A/C
13	Zebulah's Trail (S)	Stop	8.1/13.9	A/B	8.1/13.9	A/B	8.5/15.8	A/C	8.5/15.8	A/C
14	Zebulah's Trail (N)	Stop	8.1/19.2	A/C	8.1/19.2	A/C	8.7/23.6	A/C	8.7/23.6	A/C
15	SR 100	Signal	67.6	E	44.9	D	89.8	F	54.8	D
16	Eastwood Dr	Stop	12.8/19.6	B/C	12.8/19.6	B/C	12.0/19.4	B/C	12.0/19.4	B/C
17	Eastwood Dr/Market Ave	Stop	12.2/43.3	B/E	12.2/43.3	B/E	13.3/132.9	B/F	13.3/132.9	B/F
18	Easthampton Blvd/ Central Ave	Signal	34.1	C	29.9	C	69.9	E	34.2	C
19	Royal Palms Pkwy	Signal	57.2	E	26.4	C	107.9	F	28.5	C
20	Point Pleasant Dr	Stop	10.8/32.8	B/D	10.6/31.5	B/D	17.8/75.0	C/F	16.8/68.6	C/F
21	Rymfire Dr	Signal	20.3	C	20.2	C	18.9	B	20.2	C
22	Ponce Deleon Dr	Stop	11.0/28.7	B/D	10.8/27.7	B/D	16.2/55.5	C/F	15.4/51.4	C/F
23	Pine Grove Dr	Stop	11.6/175.2	B/F	10.9/23.0	B/C	19.4/301.5	C/F	15.5/22.9	C/C
24	Whiteview Pkwy	Signal	29.0	C	38.2	D	29.4	C	38.5	D
25	Whippoorwill Dr	Stop	11.6/41.6	B/E	11.3/39.0	B/E	15.1/50.9	C/F	14.4/47.9	B/E
26	Pritchard Dr	Stop	12.8/59.0	B/F	12.4/54.0	B/F	14.7/53.3	B/F	13.6/46.5	B/E
27	School Entrance	Signal	9.9	A	10.8	B	8.3	A	8.2	A
28	Parkview Dr (S)	Signal	17.9	B	18.8	B	13.4	B	14.2	B
29	Parkview Dr (N)	Stop	17.1/63.1	C/F	17.1/63.1	C/F	14.3/42.6	B/E	14.3/42.6	B/E
30	Pine Lakes Pkwy	Signal	19.7	B	18.8	B	29.8	C	22.8	C

1. Synchro based outputs are presented in this table for both the signalized and unsignalized intersections
2. Overall intersection delay and LOS results are reported for signalized intersections
3. In case of unsignalized intersections, major street/minor street worst case results (delay and LOS) are reported.
4. Result shown in color exceeds the adopted LOS D standard

7.2 Build Alternative Operational Analysis

7.2.1 Field Review

Based on the results of the No Build alternative and the crash analysis (refer to Chapter 5), a field review was performed on November 9, 2015 to identify specific issues that can be associated with the operational and/or safety deficiencies. In general, the following observations were made:

- There is a shortage of guide signs along the corridor. This might have contributed to the significant percentage of rear-end and sideswipe crashes.
- The drivers were generally observed to travel at 5 to 10 mph over the speed limit for both Belle Terre Blvd and Belle Terre Pkwy. This might have contributed to substandard operating conditions and left-turn and rear-end crashes at some unsignalized intersections;
- The minor street approaches of the following unsignalized intersections were found to have insufficient gaps for left turning vehicles, resulting in long queues and aggressive driving behavior:
    - Belle Terre Pkwy at Pine Grove Dr
    - Belle Terre Pkwy at Eastwood Dr/ Market Ave
- The shared use path along the project corridor was adequately signed for the pedestrian/bicycle traffic. However, there were no advanced signs at the minor street approach to warn the motorists ahead of the shared use path.

7.2.2 Build Alternative Geometry

Based on the results of the No Build alternative, crash review and field observations, the following improvements were considered for the design year 2030 as part of the Build alternative (**Figures 8A through 8C**).

- Optimize signal timings for all the signalized intersections.
- Belle Terre Blvd/Pkwy and SR 100 - Provide additional exclusive eastbound left turn and exclusive northbound right turn lanes.
- Belle Terre Pkwy and Easthampton Blvd/Central Ave – Provide exclusive eastbound right turn lane.

- Belle Terre Pkwy and Royal Palms Pkwy – Provide exclusive right turn lanes at all four approaches.
- Belle Terre Pkwy and Point Pleasant Dr - Provide exclusive northbound right turn lane.
- Belle Terre Pkwy and Ponce Deleon Dr - Provide exclusive northbound right turn lane.
- Belle Terre Pkwy and Pine Grove Dr - Provide exclusive northbound right turn lane. Provide a directional median to eliminate westbound left-turn movement. The diverted traffic will have to make a U-turn at the signalized intersection of Whiteview Parkway.
- Belle Terre Pkwy and Whippoorwill Dr - Provide exclusive southbound right turn lane.
- Belle Terre Pkwy and Pritchard Dr - Provide exclusive northbound right turn lane.

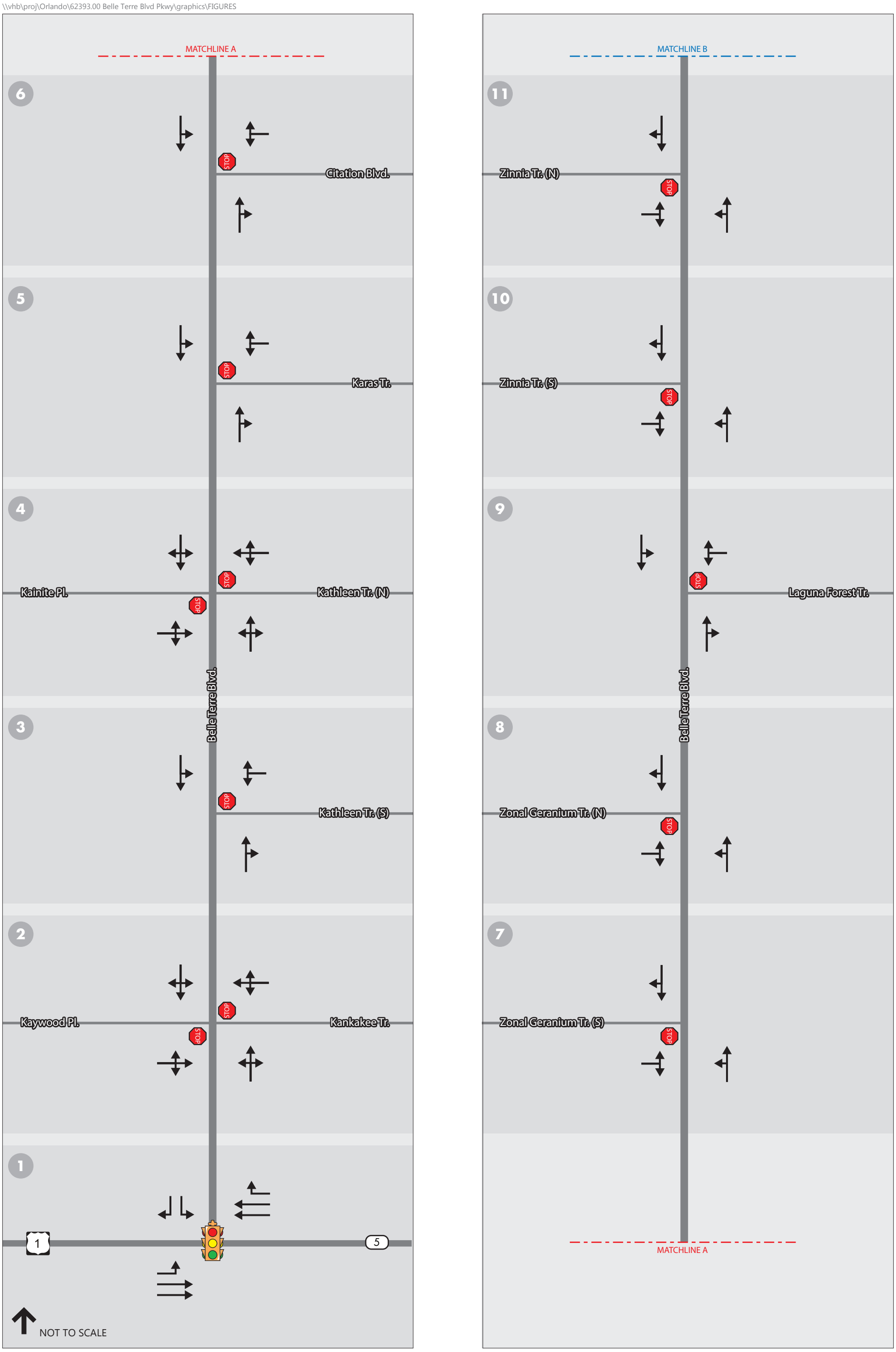

Lane Geometry

Stop-Controlled Intersection

Signalized Intersection

Figure 8A

Future Year 2030 Build Geometry

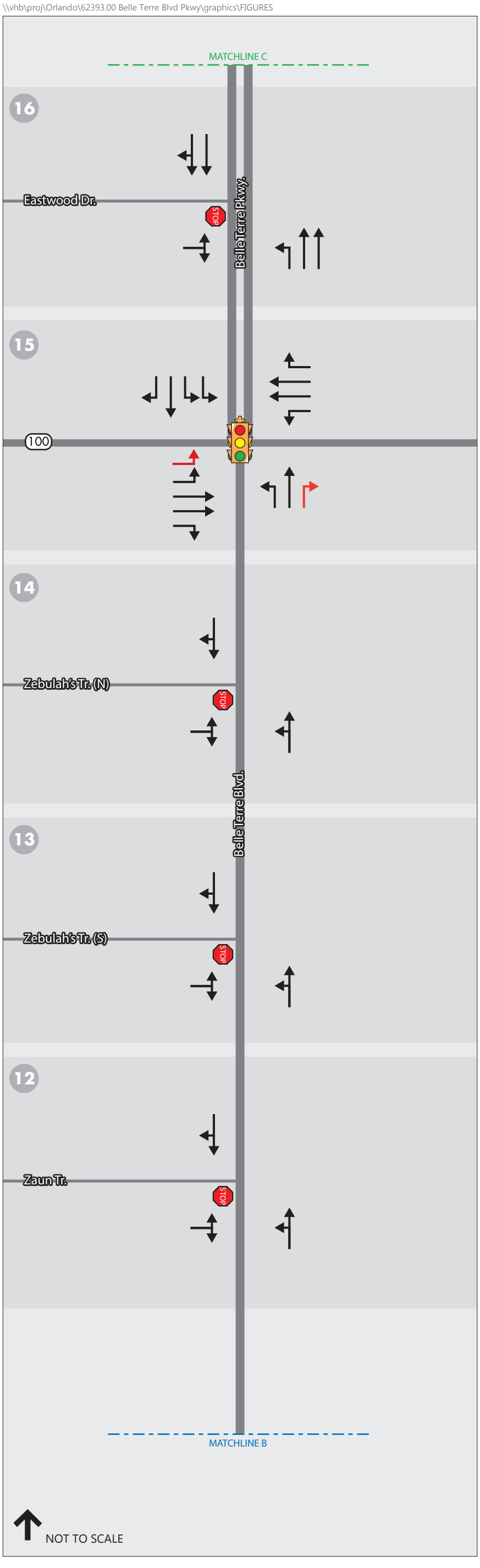

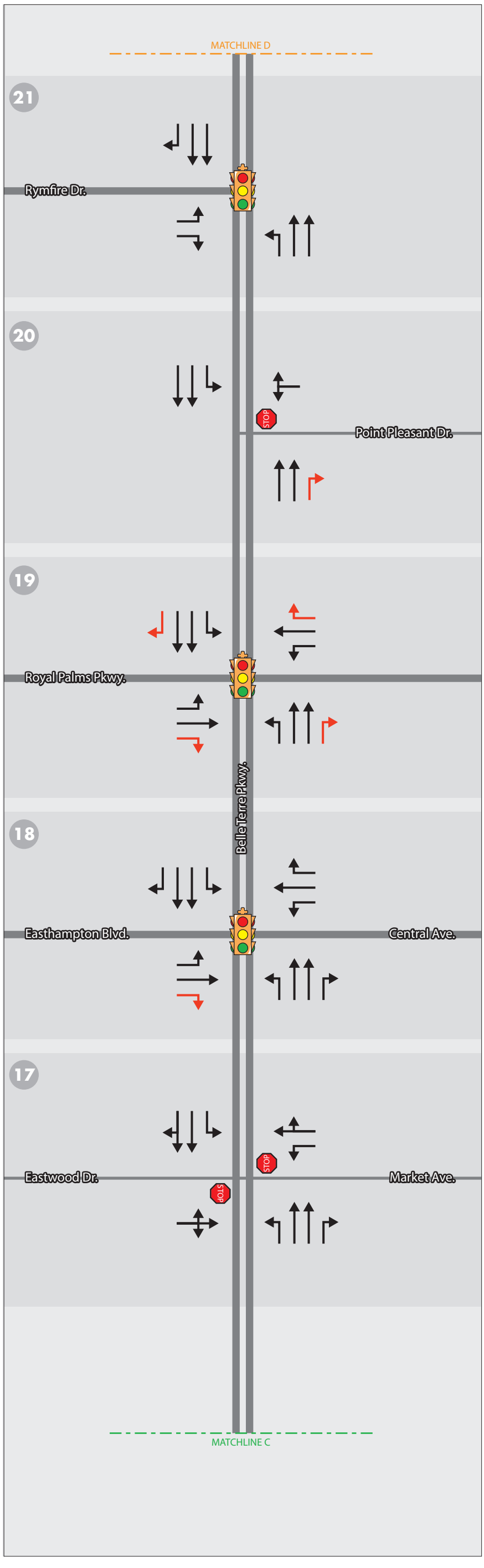

Lane Geometry

Proposed Turn Lane

Stop-Controlled Intersection

Signalized Intersection

Figure 8B

Future Year 2030 Build Geometry

Lane Geometry

Proposed Turn Lane

Stop-Controlled Intersection

Signalized Intersection

Figure 8C

Future Year 2030 Build Geometry

7.2.3 Intersection Operational Analysis

Intersection operational analyses were performed for the design year for the Build Alternative for the AM and PM design hours. The results of the intersection analysis are summarized in **Table 15** and the Synchro outputs are provided in **Appendix P**. Based on the results of the intersection analysis, the signalized intersections at Belle Terre Blvd/Pkwy and SR 100, Easthampton Blvd/Central Ave and Royal Palms Pkwy are expected to operate at better level of service compared to the No-build conditions. The unsignalized intersection at Belle Terre Pkwy and Pine Grove drive is expected to operate better with the proposed access modification (conversion from a full median opening to a directional median opening to restrict the westbound left turn from Pine Grove Dr onto Belle Terre Pkwy). This modification is anticipated to help reduce crash frequency and severity at this intersection.

The unsignalized intersection at Eastwood Dr/Market Ave shows significant delay in the future and may warrant a signal. Field observations revealed that vehicles making left turns from side streets (Point Pleasant Dr, Ponce Deleon Dr, Whippoorwill Dr, Pritchard Dr and Parkview Dr (N)) onto Belle Terre Blvd/Pkwy were able to find sufficient gaps. Future analyses for these intersections showed an average minor approach delay of 54 seconds per vehicle and does not consider actual field conditions (critical gap, driver behavior etc.). Moreover, according to Florida Administrative Rule Chapter 14-97, the project corridor falls under access class 5 (restrictive) or 6 (non-restrictive) depending on the posted speeds. Minimum signal spacing requirement for these access classes are between ¼ mile to ½ mile. The above unsignalized intersections are too close to the existing signals and therefore do not meet the access management criteria. As such, no signalizations are proposed for these intersections. Exclusive northbound right turn lanes are recommended for the intersections at Belle Terre Pkwy and Point Pleasant Dr, Ponce Deleon Dr, and Pritchard Dr. Exclusive southbound right turn lane is recommended for the intersection at Belle Terre Pkwy and Whippoorwill Dr. These intersections can be reevaluated in the future for potential operational and safety issues based on new traffic and safety data at the time of the reevaluation.

8 Recommendations

Based on the evaluation of operating conditions for the design year 2030 build traffic conditions, this study recommends the intersection capacity improvements as shown in **Table 16** to handle the projected traffic volumes within the study corridor. The improvements are ranked according to the anticipated safety and operational benefits.

Table 16: Recommended Build Scenario Improvements

Rank	Intersection	Recommended Improvements
1	Belle Terre Pkwy and Pine Grove Dr	Provide exclusive right turn at northbound approach. Restrict westbound left-turn movement. The diverted traffic will take U-turn at the signalized intersection of Whiteview Parkway.
2	Belle Terre Blvd/Pkwy and SR 100	Optimize signal timing. Provide additional exclusive left turn at eastbound approach and exclusive right turn at northbound approach.
3	Belle Terre Pkwy and Eastwood Dr/Market Ave	Consider installing a signal
4	Entire corridor	Provide adequate guide signs
5	Belle Terre Pkwy and Royal Palms Pkwy	Optimize signal timing. Provide additional exclusive right turns at all approaches
	Belle Terre Blvd/Pkwy and Easthampton Blvd/Central Ave	Optimize signal timing. Provide exclusive right turn at eastbound approach
6	Belle Terre Pkwy and Point Pleasant Dr	Provide exclusive right turn at northbound approach.
	Belle Terre Pkwy and Ponce Deleon Dr	
	Belle Terre Pkwy and Pritchard Dr	
6	Belle Terre Pkwy and Whippoorwill Dr	Provide exclusive right turn at southbound approach.
7	Belle Terre Pkwy and Whiteview Pkwy	Provide high emphasis crosswalk and pedestrian push-button signals at the north leg of the intersection

Based on the field observations, safety conditions and proposed improvements, a conceptual signing plan was developed for the corridor. The signing plan was developed in accordance with the Manual of Uniform Traffic Control Devices (MUTCD) 2009 (revised 2012) standards. Special considerations were given to the signage for the minor street crossings with the sidewalk/shared use path. The proposed conceptual signing plan is provided in **Appendix Q**.

In addition to the above improvements, this study used the Synchro reported 95th percentile queues to check the queue length requirements at the signalized intersections along the study corridor. **Table 17** illustrates the recommended queue lengths based on a comparison between existing (2015) and calculated storage lengths (2030) for the Build alternative (highest of the AM and PM design hours). It should be noted that the specific lengths do not include the taper or deceleration distance (refer to FDOT index 301 to determine the appropriate specific taper and deceleration length). The queue length results from Synchro ae shown in **Appendix R**.

Table 17: Future Year 2030 Signalized Intersections Queue Length Requirements

No.	Study Intersection	Eastbound						Westbound						Northbound						Southbound					
		Left			Right			Left			Right			Left			Right			Left			Right		
		Available Storage (ft)	Required Storage (ft)	Proposed Storage (ft)	Available Storage (ft)	Required Storage (ft)	Proposed Storage (ft)	Available Storage (ft)	Required Storage (ft)	Proposed Storage (ft)	Available Storage (ft)	Required Storage (ft)	Proposed Storage (ft)	Available Storage (ft)	Required Storage (ft)	Proposed Storage (ft)	Available Storage (ft)	Required Storage (ft)	Proposed Storage (ft)	Available Storage (ft)	Required Storage (ft)	Proposed Storage (ft)	Available Storage (ft)	Required Storage (ft)	Proposed Storage (ft)
1	SR5/ US 1	-	-	-	-	-	-	-	-	-	400	34	Existing	-	-	-	200	48	Existing	450	67	Existing	-	-	-
15	SR 100 [3]	450	325	Existing [3]	475	0	Existing	485	313	Existing	485	575	600	350	153	Existing	0	23	New RT Lane [3]	525	479	Existing	-	-	-
18	Easthampton Blvd/Central Ave	-	-	-	0	71	New RT Lane [4]	285	66	Existing	-	-	-	325	281	Existing	450	0	Existing	450	347	Existing	275	57	Existing
19	Royal Palms Pkwy	300	69	Existing	0	53	New RT Lane [5]	250	200	Existing	0	176	New RT Lane [5]	350	155	Existing	0	49	New RT Lane [5]	350	379	450	0	3	New RT Lane [5]
21	Rymfire Dr	250	136	Existing	-	-	-	-	-	-	-	-	-	350	321	Existing	-	-	-	-	-	-	200	48	Existing
24	Whiteview Pkwy	325	145	Existing	-	-	-	225	148	Existing	-	-	-	350	403	425	325	37	Existing	250	163	Existing	325	34	Existing
27	School Entrance	-	-	-	-	-	-	-	-	-	-	-	-	-	-	-	390	14	Existing	500	99	Existing	-	-	-
28	Parkview Dr (S)	-	-	-	-	-	-	275	353	375	-	-	-	-	-	-	-	-	-	175	80	Existing	-	-	-
30	Pine Lakes Pkwy	225	193	Existing	225	45	Existing	-	-	-	-	-	-	175	204	225	-	-	-	-	-	-	325	56	Existing

Note: 1. Highest queue length of the AM and PM is reported

2. The colored numbers represent the 95th percentile queues exceeding the available storage lengths

3. An exclusive northbound right turn lane and additional eastbound left-turn lane is proposed as part of the Build Alternative

4. An exclusive eastbound right turn lane is provided as part of the Build Alternative

5. Exclusive right turn lanes are provided at all approaches as part of the Build Alternative

6. The required queue lengths are converted to nearest 25th feet

9 Preliminary Cost Estimates

A planning level cost estimate was performed for the recommended improvements for the intersections as well as the conceptual signing plan for the project corridor. FDOT basis of estimates and master pay items designations were followed to obtain the itemized costs for the corridor. **Table 18** shows the approximate cost estimates based on the planning level cost calculations. **Appendix S** provides the breakdown of the cost estimates.

Table 18: Preliminary Cost Estimates

Intersection	Cost
Belle Terre Pkwy and Pine Grove Dr	$193,900
Belle Terre Blvd/Pkwy and SR 100	$205,800
Belle Terre Pkwy and Royal Palms Pkwy	$416,800
Belle Terre Blvd/Pkwy and Easthampton Blvd/Central Ave	$105,900
Belle Terre Pkwy and Point Pleasant Dr	$163,200
Belle Terre Pkwy and Ponce Deleon Dr	$163,200
Belle Terre Pkwy and Pritchard Dr	$163,200
Belle Terre Pkwy and Whippoorwill Dr	$131,800
Belle Terre Pkwy and Whiteview Pkwy	$11,000
Signing for the entire corridor	$240,000
Total	**$1,794,800**

Note: Right of way costs are not included in this preliminary cost estimate

10 Appendices

Appendix A - Responses to comments

Appendix B – City of Palm Coast Year 2035 Comprehensive Plan

Appendix C – RCI Data for Belle Terre Blvd/Pkwy Corridor

Appendix D –Flagler County Transit User Guide

Appendix E –Traffic Counts

Appendix F – FDOT Seasonal & Axle Adjustment Factors

Appendix G – Signal Timings & SYNCHRO Intersection Analysis Outputs for Year 2015

Appendix H – Crash Data

Appendix I – Crash Review Summary by Intersections

Appendix J – DRI Information

Appendix K – Trends Analysis Sheets

Appendix L – BEBR Population Projections for Flagler County

Appendix M – Year 2030 Model Plots, MOCF and Selected Link Analysis

Appendix N – TURNS5 Sheets

Appendix O – No-Build SYNCHRO Intersection Analysis Outputs for Year 2030

Appendix P – Build SYNCHRO Intersection Analysis Outputs for Year 2030

Appendix Q - Conceptual Signing Plan

Appendix R – SYNCHRO 95th Percentile Queues Lengths for Year 2030

Appendix S - Preliminary Cost Estimates Details

Appendix A

Responses to comments

Memorandum

To: R2CTPO
and City of Palm Coast

Date: February 8, 2016

Project : Belle Terre Blvd/Pkwy
Intersections Analysis Study

Re: Responses to comments on Final Report

Responses to Additional Comments from Sean Castello and Jose Papa

1. Appendix Q (Conceptual Signing Plan): please change the color of the lines that show the existing and proposed signage to make it easier to differentiate. The solid and dashed lines do not stick out enough.

   Response: The signage colors are important to be consistent with the signage standards according to the MUTCD. We changed the dashed lines and leader line colors to a more distinguishable style.

2. Page 51, Section 7.2.3, second paragraph: The consultant cannot recommend signalizing certain intersections because they will not meet the access criteria for Belle Terre Pkwy. What does that mean? Is it the spacing, geometry, etc? Explain to the layperson why you cannot signal the intersection.

   Response: The unsignalized intersections with Belle Terre Pkwy at Point Pleasant Dr, Ponce Deleon Dr, Whippoorwill Dr, Pritchard Dr and Parkview Dr (N) did not show any significant delays and queues in the field observation. Moreover, according to Florida Administrative Rule Chapter 14-97, the project corridor falls under access class 5 (restrictive) or 6 (non-restrictive) depending on the posted speeds. Minimum signal spacing requirement for these access classes are between ¼ mile to ½ mile. The above unsignalized intersections are too close to the existing signals and therefore do not meet the access management criteria. As such, no signalizations are proposed for these intersections. We expanded the text to describe these access management criteria.

3. Page 51, Section 7.2.3, second paragraph: Aren't we recommending the addition of right turn lanes at some of these intersections?

   Response: Yes, additional right-turn lanes were recommended for some of these unsignalized intersections. The future reevaluation was referring to the possible access management options (e.g., restricting left-turn movements from the minor street) for these intersections in the future, based on new traffic and/or safety data at the time of the reevaluation. In the current study, no access restrictions were proposed for these intersections.

4. Page 52, Table 16, intersection Belle Terre Pkwy and Eastwood Dr/Market Ave: Need to reword to be more consistent with other text. Does not warrant a signal at this time. Future traffic projections indicate need for signal?

   Response: We do not have the required four to eight hour counts for the side streets that will be necessary to determine the possible outcome of the signal warrant analysis.

5. Page 52, Table 16, intersection Belle Terre Pkwy and Whippoorwill Dr: Is there another recommendation? restricted left?

   Response: Field observations for this intersection showed that drivers from the minor streets were able to find gaps to take turns onto Belle Terre Pkwy. Therefore, this intersection will not need any additional improvements, other than the proposed southbound right-turn lane. Text were added in the report Section 7.2.3 to illustrate this further.

6. Page 55, Table 18: Is there a phasing plan that we can recommend?

   Response: A priority ranking was recommended as part of the listed proposed improvements in Chapter 8, Table 16.

7. Page 55, Table 18, intersection Belle Terre Blvd/Pkwy and SR 100: Eastbound left-turn lane is included in FDOT Work Program. Provide recommendation for this intersection to FDOT.

   Response: Noted.

Memorandum

To: R2CTPO
and City of Palm Coast

Date: January 22, 2016

Project : Belle Terre Blvd/Pkwy
Intersections Analysis Study
Re: Responses to comments

Responses to Comments from Sean Castello

1. Section 7.1.2: Please include the intersection of Belle Terre Pkwy and Easthampton Blvd/Central Ave. This intersection showed failure in the No Build PM Peak Hour.

   Response: *This intersection was included in the list of deficient intersections in the revised report.*

2. Section 7.2.1, Bullet point 3: All of the signalized intersections, except for the intersections of Belle Terre Pkwy at Parkview Dr. (S) and at the School Entrance, are not closely spaced intersections and would not necessarily be improved with coordination. Please remove the reference to closely spaced intersections.

   Response: *The reference to closely spaced intersection was removed from the revised report.*

3. Section 7.2.3: The second paragraph states the intersections of Belle Terre Pkwy at SR 100, Easthampton Blvd/Central Ave, and Royal Palms Pkwy would operate better but the only intersection with recommended improvements is Belle Terre Pkwy at SR 100. Other than improved signal timings, how would those intersections improve?

   Response: *Geometric improvements were not recommended for the intersections along Belle Terre Pkwy at Easthampton Blvd and at Royal Palms Pkwy because signal optimization was enough to maintain the level of service "D" in the 2030 conditions. However, since the intersection at Belle Terre Pkwy/Royal Palms Pkwy is projected to have intersection delay very close to LOS "E" in 2030, exclusive turn lanes were included in the revised analysis and report.*

4. Section 7.2.3: The report states at the intersection of Belle Terre Pkwy at Eastwood Dr/Market Ave a signal warrant analysis is recommended. Are the existing or build volumes any indication that an eight or four hour warrant could be meet sooner rather than later.

   Response: *We do not have the required four to eight hour counts for the side streets that will be necessary to determine the possible outcome of the signal warrant analysis.*

5. Section 7.2.3: Belle Terre Pkwy generally falls under access class 5 and 6 for access management criteria with signal spacing criteria of either ¼ to ½ mile. The intersections of Belle Terre Pkwy at Point Pleasant Dr., at Ponce DeLeon Dr., at Pritchard Dr. and at Whippoorwill Dr. are too close to existing signals. Other options would need to be examined at these intersections to improve safety and operations.

   Response: *Field observations at these intersections showed that drivers from the minor streets were able to find gaps to take turns onto Belle Terre Pkwy. The future (2030) Synchro analysis shows only an average of 54*

seconds delay for the minor approaches for these intersections and does not take into account the driver aggression factors and time gaps. Therefore, these intersections will not need any additional improvements. Text were added in the report to illustrate this further.

6. Table 17: Would a westbound right turn lane be useful at the intersection of Belle Terre Pkwy and Royal Palms Pkwy? This is a heavy movement throughout the day.

   Response: We have included exclusive right turn lanes on all approaches at the intersection of Belle Terre Blvd and Royal Palms Pkwy.

7. Table 17: Would an eastbound right turn lane be useful at the intersection of Belle Terre Pkwy and Easthampton Blvd? That movement is very heavy in the AM and PM Peak Hours.

   Response: We included eastbound right turn lane in the revised analysis and report.

8. Page 30: At intersections where pedestrian related crashes have occurred, please list what street pedestrians was trying to cross and if a crosswalk exists for that crossing.

   Response: The report Section 5.1 was updated to include the details of pedestrian crossings and availability of the crosswalks at the intersections where such crashes have occurred.

9. General: Please provide guidance for the recommended guide signs along the corridor. The City would like details as to where signs should be placed and the types as well.

   Response: The draft signing plan is attached as an Appendix in the report.

10. Please include right turn lanes for all approaches at the intersection of Belle Terre Pkwy @ Royal Palms Pkwy

    Response: Please see the response to Comment #6.

Responses to Comments from Jose Papa

1. Page 25: Typo: "on" instead of "or"

   Response: The typo was corrected in the revised report.

2. Page 29: Table 9: What is PDO?

   Response: Property Damage Only crashes. This abbreviation was expanded in the revised report.

3. Pages 30-31: Belle Terre Pkwy at Eastwood Dr/Market Avenue: Interested if this was crossing Eastwood or Belle Terre Pkwy.? (There is no crosswalk at Belle Terre Pkwy.)

   Response: According to the police report, the bicyclist was crossing the Market Avenue and was hit by a vehicle exiting the Publix store.

4. Page 32, below Table 10: Typo: "Terre" instead of "Terkre"

   Response: This typo was corrected in the revised report.

5. Page 46, first bullet: What are guide signs? Recommendations on type of guide signs?

   Response: Guide signs are used to direct road users to inform them of intersecting routes, and to direct them to important destinations. The draft signing plan recommends the proposed conceptual signage for the project corridor which includes guide signs.

6. Page 46, second bullet: What is recommendation? Will guide signs mitigate some of the left-turn and rear-end crashes?

   Response: Certain types of crashes (especially Rear-end) most likely occur when drivers suddenly slow down to turn left at intersections without guide signs ("xxxx Signal Ahead" sign). These types of crashes can be mitigated with the addition of guide signs at appropriate locations.

7. Page 46, third bullet: Coordinate signals;

   Response: Except for the signals along Belle Terre Pkwy at School Entrance and at Parkview Dr (S), the other signalized intersections are not closely spaced within the project corridor. Therefore, this bullet was removed from the revised report.

8. Page 46, fourth bullet: What is recommendation for these intersections? Are problems on the main street or minor street?

Response: For the unsignalized intersections, the delay and the corresponding failing level-of-service are always associated with the minor street. For the recommended improvements for these intersections, please refer to Chapter 8 of the revised report.

9. Page 46, fifth bullet: Is there a recommendation for advanced signage on minor street approaching shared use path?

   Response: Please see the draft conceptual signing plan attached in an Appendix.

10. Page 46, section 7.2.2: Are proposed build alternatives warranted with current traffic volumes or 2030 volumes?

    Response: Majority of the proposed improvements are warranted for the 2030 traffic conditions. However, in the existing conditions, some of the intersections operate below the standard level of service "D", which are: the minor approaches of the intersections at Belle Terre Pkwy/ Eastwood Dr and Belle Terre Pkwy/Pine Grove Dr.

11. Page 46, 47, section 7.2.2: Why is recommendation to restrict westbound left-turn movement at Pine Grove Dr.? Why is this recommendation not for other intersections along the corridor (Is it volume? Geometry? Proximity to signalized intersection?)

    Response: The 2030 estimated volumes (westbound left, northbound & southbound through volumes) at Belle Terre Pkwy/Pine Grove Dr are heavy and resulted in high delay for the westbound approach. In addition, based on the historical crash data, fatal crashes have happened because of the heavy volumes and lack of gaps for the westbound left turn movement. However, this was not the case with other intersections and as such access modification was not considered for those unsignalized intersections.

12. Page 46, 47, section 7.2.2: No exclusive southbound right turn at Eastwood Dr., Royal Palms Pkwy.? Why Whippoorwill?

    Response: Based on the discussion with the City staff, exclusive turn lanes were provided at Royal Palms Pkwy.

13. Page 46, 47, section 7.2.2: Exclusive northbound right turn - Royal Palms Pkwy.?

    Response: Please see the response to comment #12.

Appendix B

City of Palm Coast Year 2035 Comprehensive Plan

The City has developed Short-Range (5 years) and Long-Range (25 years) Transportation Plans that identify current and future transportation deficiencies and identifies improvements in the roadway network based on the adopted FLUM. Develop strategies, including corridor studies, to address and identify deficiencies..

Policy 2.1.4.1 – The Transportation Plan shall address the short- and long-range needs of City residents for streets, public transit, pedestrian and bicycle facilities, including potential funding sources and assigns responsibility for future construction.

Policy 2.1.4.2 – The City shall solicit funding from FDOT and other appropriate sources to help develop the Transportation Plan.

Policy 2.1.4.3 – The Transportation Plan includes a verification of the following 2015 and 2035 deficiencies in Tables 2.4 and 2.5, respectively in *Chapter 2* of the *Data and Analysis and the recommended strategies to maintain the adopted LOS.*

2015 Roadway Improvements

The following improvements are recommended to maintain the adopted LOS standard on the City's roadway network in 2015:

- Belle Terre Parkway from Pine Lakes Parkway (S) to Cypress Point Parkway – Six-Lane
- Old Kings Road from the Palm Coast City limits (S) to Oak Trails Boulevard – Four-lane
- Palm Coast Parkway from US 1 to Pine lakes Parkway – Intersection Improvements

2035 Roadway Improvements

The following roadways are anticipated to be deficient in 2035 and improvements may be required to maintain the adopted LOS standard on the City's roadway network:

- Belle Terre Parkway from US 1 to SR 100
- Belle Terre Parkway from SR 100 to Royal Palms Parkway
- Belle Terre Parkway from White View Parkway to Pine Lakes Parkway (S)
- Matanzas Woods Parkway Westerly Extension from US 1
- Old King's Road from Palm Coast City Limit (S) to Palm Coast Parkway
- Old King's Road from Farragut Drive to Farmsworth Drive
- Palm Coast Parkway from US 1 to Pine Lakes Parkway
- Palm Coast Parkway (EB) from Pine Lakes Parkway to Belle Terre Parkway
- Palm Coast Parkway (WB) from Pine lakes Parkway to Belle Terre Parkway
- Palm Coast Parkway from Cypress Point Parkway to I-95 East Ramps
- Seminole Woods Parkway from US 1 to Sesame Boulevard
- SR 100 from Seminole Woods Parkway to John Anderson
- Town Center Boulevard from Central Avenue to Old Kings Road

- US 1 from Matanzas Woods Parkway to White View Parkway

A range of mitigation measures will be applied to address these projected deficiencies including but not limited to intersection improvements, multi-modal transportation alternatives or roadway widening, as appropriate. The City shall monitor the LOS on the City's road network to ensure improvements are scheduled in advance of their need.

Policy 2.1.4.4 – The Transportation Plan shall recommend roadway improvements throughout the City, estimate the cost of the improvements, identify potential funding for the project, and develop time frames for construction as candidate projects for the CIP.

Policy 2.1.4.5 – Based on the Transportation Plan, the City has identified the arterial and collector roadways within its jurisdiction that have of the potential to fail in 2015 and 2035. Using this information, corridor studies on roadways determined to fail within the next 25 years shall be scheduled, as needed. These corridor studies shall focus on methods to improve projected LOS on the roadways through the use of Intelligent Transportation Systems (ITS), transit, intersection improvements, travel incentives/disincentives, construction options, or mitigation methods considered appropriate to reduce travel demand.

Policy 2.1.4.6 – The City shall conduct corridor studies, as needed, and adopt the studies' findings for each of the following roadways:

A. Florida Park Drive
B. Old Kings Road
C. Belle Terre Parkway
D. White View Parkway
E. Pine Lakes Parkway
F. Rymfire Drive

Policy 2.1.4.7 – As part of all corridor studies, the City shall assess the need for turn lanes at local and collector/arterial intersections. Where the need for turn lanes is identified, the City shall include the improvements in the City's CIP.

Policy 2.1.4.8 – The City shall identify transit alternatives and parking strategies for the City that will reduce the rate of growth in traffic congestion by 5% and assist in meeting the City's future transportation needs.

Policy 2.1.4.9 - Continue to enforce highway and roadway access management standards in the LDC for all arterials and major collectors in the City.

Appendix C

RCI Data for Belle Terre Blvd/Pkwy Corridor

FLORIDA DEPARTMENT OF TRANSPORTATION ROADWAY CHARACTERISTIC INVENTORY

Belle Terre Blvd/Pkwy - From SR5/US 1 to Pine Lakes Pkwy (Flagler County, Florida)

Roadway ID:	Man-Dist:	Geo-Dist:	County:	Beg. MP:	End. MP:	Net Length:	Overall Status:
73517000	5		5 FLAGLER	0	9.564	9.085	ACTIVE WITH COMBINATION

Description: BELLE TERRE PKWY VideoLog Enterprise GIS

Feature 121 - FUNCTIONAL CLASSIFICATION — LENGTH/NON-INTERLOCKING

Beg. MP	End. MP	Characteristic	Value	Unit	Side	Offset	Char. Updated
0	8.797	FUNCTIONAL CLASSIFICATION	16 - URBAN MINOR ART	CD	C		PL934TH 09/10/2014

Feature 146 - ACCESS MANAGEMENT — LENGTH/INTERLOCKING

Beg. MP	End. MP	Characteristic	Value	Unit	Side	Offset	Char. Updated
There is no Characteristic Data to view for the Information Selected.							

Feature 212 - THROUGH LANES — LENGTH/INTERLOCKING

Beg. MP	End. MP	Characteristic	Value	Unit	Side	Offset	Char. Updated
0	8.797	NUMBER OF ROADWAY LANES	2	EA	L		MT591PD 05/08/2012
		PAVEMENT SURFACE WIDTH	24	FT	L		MT591PD 05/08/2012
0	8.797	NUMBER OF ROADWAY LANES	2	EA	R		MT591PD 05/08/2012
		PAVEMENT SURFACE WIDTH	24	FT	R		MT591PD 05/08/2012

Feature 214 - OUTSIDE SHOULDERS — LENGTH/NON-INTERLOCKING

Beg. MP	End. MP	Characteristic	Value	Unit	Side	Offset	Char. Updated
There is no Characteristic Data to view for the Information Selected.							

Feature 216 - BIKE LANES/PED SIDEWALK — LENGTH/INTERLOCKING

Beg. MP	End. MP	Characteristic	Value	Unit	Side	Offset	Char. Updated
There is no Characteristic Data to view for the Information Selected.							

Feature 217 - SIDEWALKS — LENGTH/NON-INTERLOCKING

Beg. MP	End. MP	Characteristic	Value	Unit	Side	Offset	Char. Updated
There is no Characteristic Data to view for the Information Selected.							

Feature 251 - INTERSECTION — POINT/INTERLOCKING

Beg. MP	End. MP	Characteristic	Value	Unit	Side	Offset	Char. Updated
0		BEG.RDWY.SECTION POINT DESC.	SR 100 / MOODY BLVD	ID	C		MT510MD 01/29/2010
		90 DEGREES L. & 90 DEGREES R.	SR 100 / MOODY BLVD	ID	C		MT510MD 01/29/2010
0.281		90 DEGREES LEFT	EASTWOOD DR	ID	C		RCICNVRT 08/01/1995
0.744		90 DEGREES LEFT	EASTWOOD DR	ID	C		RCICNVRT 08/01/1995
		90 DEGREES RIGHT	MARKET AVE	ID	C		MT510MD 01/29/2010
1.039		90 DEGREES LEFT	EAST HAMPTON BLVD	ID	C		RCICNVRT 08/01/1995
		90 DEGREES RIGHT	CENTRAL AVE	ID	C		MT591PD 05/08/2012
1.553		90 DEGREES L. & 90 DEGREES R.	ROYAL PALMS PKWY	ID	C		RCICNVRT 08/01/1995
1.817		90 DEGREES RIGHT	POINT PLEASANT DR	ID	C		RCICNVRT 02/06/2002
2.09		90 DEGREES LEFT	RYMFIRE DR	ID	C		RCICNVRT 02/06/2002
2.387		90 DEGREES RIGHT	PONCE DELEON DR	ID	C		RCICNVRT 03/26/2002
2.795		90 DEGREES RIGHT	PINE GROVE DR	ID	C		RCICNVRT 02/06/2002
3.009		90 DEGREES L. & 90 DEGREES R.	WHITEVIEW PKWY	ID	C		RCICNVRT 05/09/2002
3.248		90 DEGREES LEFT	WHIPPOORWILL DR	ID	C		RCICNVRT 05/09/2002
3.414		90 DEGREES RIGHT	PRITCHARD DR	ID	C		RCICNVRT 05/09/2002
3.857		90 DEGREES RIGHT	SCHOOL ENTRANCE	ID	C		RCICNVRT 05/09/2002
4.029		90 DEGREES RIGHT	PARKVIEW DR	ID	C		RCICNVRT 05/09/2002
4.729		90 DEGREES RIGHT	PARKVIEW DR	ID	C		RCICNVRT 05/09/2002
5.058		90 DEGREES LEFT	PINE LAKES PKWY	ID	C		RCICNVRT 05/09/2002

Feature 311 - SPEED ZONE — LENGTH/INTERLOCKING

Beg. MP	End. MP	Characteristic	Value	Unit	Side	Offset	Char. Updated
There is no Characteristic Data to view for the Information Selected.							

Feature 322 - SIGNALS — POINT/INTERLOCKING

Beg. MP	End. MP	Characteristic	Value	Unit	Side	Offset	Char. Updated
There is no Characteristic Data to view for the Information Selected.							

Feature 331 - TRAFFIC FLOW BREAKS							LENGTH/INTERLOCKING
Beg. MP	End. MP	Characteristic	Value	Unit	Side	Offset	Char. Updated
0	8.797	AADT DATE	12/31/2014	DA	C		PL934TH 03/17/2015
		AADT TYPE	2 - FIN. EST. FROM GROWTH FACTOR	CD	C		PL934TH 03/17/2015
		RDWY SECTION AVG "D" FACTOR	62.5	EA	C		PL934TH 03/17/2015
		K FACTOR	9	EA	C		PL934TH 03/17/2015
		SECTION AVERAGE T FACTOR	7	EA	C		PL934TH 03/17/2015
		SECTION AVERAGE ADT	23500	EA	C		PL934TH 03/17/2015

Feature 341 - LIGHTING SYSTEM							TOTAL/NON-INTERLOCKING
Beg. MP	End. MP	Characteristic	Value	Unit	Side	Offset	Char. Updated
There is no Characteristic Data to view for the Information Selected.							

Feature 453 - CROSS WALKS							TOTAL/NON-INTERLOCKING
Beg. MP	End. MP	Characteristic	Value	Unit	Side	Offset	Char. Updated
There is no Characteristic Data to view for the Information Selected.							

Roadway ID:	Man-Dist:	Geo-Dist:	County:	Beg. MP:	End. MP:	Net Length:	Overall Status:
73000011	5	5	FLAGLER	0	3.751	3.751	ACTIVE OFF THE SHS
Description: BELLE TERRE BLVD						VideoLog	Enterprise GIS

Feature 121 - FUNCTIONAL CLASSIFICATION							LENGTH/NON-INTERLOCKING
Beg. MP	End. MP	Characteristic	Value	Unit	Side	Offset	Char. Updated
0	3.751	FUNCTIONAL CLASSIFICATION	16 - URBAN MINOR ART	CD	C		PL934TH 09/10/2014

Feature 146 - ACCESS MANAGEMENT							LENGTH/INTERLOCKING
Beg. MP	End. MP	Characteristic	Value	Unit	Side	Offset	Char. Updated
There is no Characteristic Data to view for the Information Selected.							

Feature 212 - THROUGH LANES							LENGTH/INTERLOCKING
Beg. MP	End. MP	Characteristic	Value	Unit	Side	Offset	Char. Updated
0	0.909	NUMBER OF ROADWAY LANES	2	EA	C		RCICNVRT 03/06/2003
		PAVEMENT SURFACE WIDTH	22	FT	C		MT591PD 11/17/2014
0.909	1.143	NUMBER OF ROADWAY LANES	1	EA	L		MT591PD 12/04/2009
		PAVEMENT SURFACE WIDTH	11	FT	L		MT591PD 11/17/2014
0.909	1.143	NUMBER OF ROADWAY LANES	1	EA	R		MT591PD 12/04/2009
		PAVEMENT SURFACE WIDTH	11	FT	R		MT591PD 11/17/2014
1.143	3.751	NUMBER OF ROADWAY LANES	2	EA	C		MT591PD 12/04/2009
		PAVEMENT SURFACE WIDTH	22	FT	C		MT591PD 11/17/2014

Feature 214 - OUTSIDE SHOULDERS							LENGTH/NON-INTERLOCKING
Beg. MP	End. MP	Characteristic	Value	Unit	Side	Offset	Char. Updated
0	0.909	HIGHWAY SHOULDER TYPE	3 - LAWN	CD	C	R & L	MT591PD 11/17/2014
0	0.909	HIGHWAY SHOULDER WIDTH	12	FT	C	R & L	MT591PD 11/17/2014
0.909	1.143	HIGHWAY SHOULDER TYPE	1 - PAVED	CD	L	L	MT591PD 11/17/2014
0.909	1.143	HIGHWAY SHOULDER WIDTH	4	FT	L	L	MT591PD 11/17/2014
0.909	1.143	HIGHWAY SHOULDER TYPE 2	3 - LAWN	CD	L	L	MT591PD 11/17/2014
0.909	1.143	HIGHWAY SHOULDER WIDTH 2	12	FT	L	L	MT591PD 11/17/2014
0.909	1.143	HIGHWAY SHOULDER TYPE	1 - PAVED	CD	R	R	MT591PD 11/17/2014
0.909	1.143	HIGHWAY SHOULDER WIDTH	4	FT	R	R	MT591PD 11/17/2014
0.909	1.143	HIGHWAY SHOULDER TYPE 2	3 - LAWN	CD	R	R	MT591PD 11/17/2014
0.909	1.143	HIGHWAY SHOULDER WIDTH 2	12	FT	R	R	MT591PD 11/17/2014
1.143	3.751	HIGHWAY SHOULDER TYPE	3 - LAWN	CD	C	R & L	MT591PD 12/04/2009
1.143	3.751	HIGHWAY SHOULDER WIDTH	12	FT	C	R & L	MT591PD 11/17/2014

Feature 216 - BIKE LANES/PED SIDEWALK							LENGTH/INTERLOCKING
Beg. MP	End. MP	Characteristic	Value	Unit	Side	Offset	Char. Updated
0.007	0.404	SIDEWALK BARRIER CODE	0 - NO BARRIER	CD	C		MT591PD 11/17/2014
		SIDEWALK WIDTH AND SEP.	10	FT	C	L	MT591PD 11/17/2014
0.404	0.621	SIDEWALK BARRIER CODE	0 - NO BARRIER	CD	C		MT591PD 11/17/2014
		SIDEWALK WIDTH AND SEP.	10	FT	C	L	MT591PD 11/17/2014
0.621	0.909	SIDEWALK BARRIER CODE	0 - NO BARRIER	CD	C		MT591PD 11/17/2014
		SIDEWALK WIDTH AND SEP.	10	FT	C	L	MT591PD 11/17/2014
0.909	1.071	SIDEWALK BARRIER CODE	0 - NO BARRIER	CD	L		MT591PD 11/17/2014
		SIDEWALK WIDTH AND SEP.	10	FT	L	L	MT591PD 11/17/2014
1.071	1.143	SIDEWALK BARRIER CODE	4 - GRDRAIL/TRAF RAIL BARR/SWALE	CD	L		MT591PD 11/17/2014
		SIDEWALK WIDTH AND SEP.	10	FT	L	L	MT591PD 11/17/2014
1.143	1.211	SIDEWALK BARRIER CODE	4 - GRDRAIL/TRAF RAIL BARR/SWALE	CD	C		MT591PD 11/17/2014
		SIDEWALK WIDTH AND SEP.	10	FT	C	L	MT591PD 11/17/2014
1.211	3.744	SIDEWALK BARRIER CODE	0 - NO BARRIER	CD	C		MT591PD 11/17/2014
		SIDEWALK WIDTH AND SEP.	10	FT	C	L	MT591PD 11/17/2014

Feature 217 - SIDEWALKS — **LENGTH/NON-INTERLOCKING**

Beg. MP	End. MP	Characteristic	Value	Unit	Side	Offset	Char. Updated
There is no Characteristic Data to view for the Information Selected.							

Feature 251 - INTERSECTION — **POINT/INTERLOCKING**

Beg. MP	End. MP	Characteristic	Value	Unit	Side	Offset	Char. Updated
0		BEG.RDWY.SECTION POINT DESC.	US 1/ SR 5	ID	C		RCICNVRT 03/04/2003
		90 DEGREES L. & 90 DEGREES R.	US 1/ SR 5	ID	C		RCICNVRT 03/04/2003
0.201		90 DEGREES LEFT	KANKAKEE TRL	ID	C		MT510MD 01/29/2010
		90 DEGREES RIGHT	KAYWOOD PL	ID	C		MT591DD 12/10/2004
0.277		90 DEGREES RIGHT	KATHLEEN TRL	ID	C		MT591PD 11/17/2014
0.605		90 DEGREES LEFT	KAINITE PL	ID	C		MT591DD 12/10/2004
		90 DEGREES RIGHT	KATHLEEN TRL	ID	C		MT591PD 11/17/2014
0.788		90 DEGREES RIGHT	KARAS TRL	ID	C		MT591PD 11/17/2014
1.071		90 DEGREES LEFT	MAGNOLIA TRACE BLVD	ID	C		MT591PD 12/04/2009
1.314		90 DEGREES RIGHT	CITATION BLVD	ID	C		MT591DD 12/10/2004
1.623		90 DEGREES LEFT	ZONAL GERANIUM TRL	ID	C		MT591PD 11/17/2014
1.958		90 DEGREES LEFT	ZONAL GERANIUM TRL	ID	C		MT591PD 11/17/2014
1.97		90 DEGREES RIGHT	LAGUNA FOREST TRL	ID	C		MT591PD 11/17/2014
2.345		90 DEGREES LEFT	ZINNIA TRL	ID	C		MT591PD 11/17/2014
2.688		90 DEGREES LEFT	ZINNIA TRL	ID	C		MT591PD 11/17/2014
2.745		90 DEGREES LEFT	ZAUN TRL	ID	C		MT591PD 11/17/2014
3.001		90 DEGREES LEFT	ZEBULAHS TRL	ID	C		MT510MD 01/29/2010
3.539		90 DEGREES LEFT	ZEBULAHS TRL	ID	C		MT510MD 01/29/2010
3.751		END OF SECT. DESC.	SR-100/MOODY BLVD	ID	C		MT591PD 05/05/2015
		90 DEGREES L. & 90 DEGREES R.	SR-100/MOODY BLVD	ID	C		MT591PD 05/05/2015

Feature 311 - SPEED ZONE — **LENGTH/INTERLOCKING**

Beg. MP	End. MP	Characteristic	Value	Unit	Side	Offset	Char. Updated
0	3.751	DATE SPEED ZONE APPROVED	12/17/2004	DA	C		TO562JG 12/17/2004
		MAXIMUM SPEED LIMIT	50	MH	C		TO562JG 12/17/2004

Feature 322 - SIGNALS — **POINT/INTERLOCKING**

Beg. MP	End. MP	Characteristic	Value	Unit	Side	Offset	Char. Updated
There is no Characteristic Data to view for the Information Selected.							

Feature 331 - TRAFFIC FLOW BREAKS — **LENGTH/INTERLOCKING**

Beg. MP	End. MP	Characteristic	Value	Unit	Side	Offset	Char. Updated
0	2.345	AADT DATE	12/31/2014	DA	C		PL934TH 03/17/2015
		AADT TYPE	2 - FIN. EST. FROM GROWTH FACTOR	CD	C		PL934TH 03/17/2015
		RDWY SECTION AVG "D" FACTOR	62.5	EA	C		PL934TH 03/17/2015
		K FACTOR	9	EA	C		PL934TH 03/17/2015
		SECTION AVERAGE T FACTOR	7	EA	C		PL934TH 03/17/2015
		SECTION AVERAGE ADT	3200	EA	C		PL934TH 03/17/2015
2.345	3.751	AADT DATE	12/31/2014	DA	C		PL934TH 03/17/2015
		AADT TYPE	1 - FINAL ESTIMATE FROM SURVEY	CD	C		PL934TH 03/17/2015
		RDWY SECTION AVG "D" FACTOR	62.5	EA	C		PL934TH 03/17/2015
		K FACTOR	9	EA	C		PL934TH 03/17/2015
		SECTION AVERAGE T FACTOR	2.2	EA	C		PL934TH 03/17/2015
		SECTION AVERAGE ADT	5200	EA	C		PL934TH 03/17/2015

Feature 341 - LIGHTING SYSTEM — **TOTAL/NON-INTERLOCKING**

Beg. MP	End. MP	Characteristic	Value	Unit	Side	Offset	Char. Updated
There is no Characteristic Data to view for the Information Selected.							

Feature 453 - CROSS WALKS — **TOTAL/NON-INTERLOCKING**

Beg. MP	End. MP	Characteristic	Value	Unit	Side	Offset	Char. Updated
There is no Characteristic Data to view for the Information Selected.							

Appendix D

Flagler County Transit User Guide

2014

Flagler County Public Transportation

User Guide

FLAGLER COUNTY
FLORIDA

Flagler County Public Transportation (FCPT) is a door-to-door shared ride Para-transit Service. Shared ride means your trip may involve stopping to pick up or drop off other passengers along the way. FCPT provides specialized transportation throughout Flagler County. FCPT does not have fixed routes and so passengers need to reserve rides on FCPT.

Here are some general rules to keep in mind when traveling with us:

1. Passengers must be seated and be **secured by a seat belt** (including wheelchair passengers) when the vehicle is in motion. Anyone who refuses to wear seatbelts will not be transported.

2. Passengers may not eat, drink, or smoke on the vehicle.

3. Passengers are responsible for being considerate for other passengers sharing rides, by practicing good personal hygiene and refrain from**:** excessive noise, throwing objects, fighting, sticking arms and/or head out the window, lewd behavior, etc.

1. **DETERMINING ELIGIBILITY TO USE FCPT**

To become qualified for FCPT service a completed application must be submitted to the FCPT office for processing and determination of eligibility. Passengers normally must be residents of Flagler County. Application and approval for services can take up to Fourteen (14) days to complete. Once you complete initial qualification, the scheduling of future trips is a quick and easy process.

Here are categories of eligible FCPT passengers:

A. Public transportation passenger, meeting local, state, or federal guidelines.

B. Transportation disadvantaged passengers.

C. Medicaid passengers who must fill out the Medicaid transportation application have a Medicaid number.

2. REQUESTING FCPT SERVICES

Passengers are required to request service from Flagler County Public Transportation two weeks in advance to reserve a ride. Same day service is not available. Calling for a reservation is the only way to ensure being scheduled for a ride. Rides may be reserved by calling (386)313-4100 or by fax (386)313.4143.

Appendix E

Traffic Counts

TRAFFIC COUNT DATA

DISTRICTWIDE PD&E

LINK: 1270

COUNT LOCATION: Belle Terre Blvd from Citation Blvd to Zaun Trail

TYPE OF COUNT:

24 HOUR Classification Count

TIME OF COUNT:

Start Date:	Feb 3, 2015	Start Time:	00:00
End Date:	Feb 3, 2015	End Time:	24:00

VOLUMES:

Average Daily:	5,205	Average Peak Hour:	510
Daily Truck Avg:	94	Peak Hour Truck Avg:	1

TRAVEL CHARACTERISTICS:

Peak Hour:	16:45	to	17:45
Peak Direction:	Southbound		
Peak to Daily Volume Ratio:	K = 0.098		
Peak Direction Distribution Ratio:	D = 53.7%		

T peak:	0.20%	T daily:	1.81%
T med:	0.00%	T med:	1.19%
T heavy:	0.20%	T heavy:	0.61%
T (Northbound):	0.00%	T (Northbound):	1.06%
T (Southbound):	0.20%	T (Southbound):	0.75%
T (Northbound)med:	0.00%	T (Northbound)med:	0.77%
T (Southbound)med:	0.00%	T (Southbound)med:	0.42%
T (Northbound)heavy:	0.00%	T (Northbound)heavy:	0.29%
T (Southbound)heavy:	0.20%	T (Southbound)heavy:	0.33%

HOURLY DISTRIBUTION OF TRAFFIC VOLUMES

DISTRICTWIDE PD&E

STATE PROJECT NO.: 1270
LOCATION CODE: 0
COUNT LOCATION: Belle Terre Blvd from Citation Blvd to Zaun Trail

HOUR STARTS AT	HOURLY VOLUME Northbound	HOURLY VOLUME Southbound	TOTAL VOLUME BOTH DIRECTIONS	HOURLY DISTRIBUTION Northbound	HOURLY DISTRIBUTION Southbound	HOURLY DISTRIBUTION BOTH DIRECTIONS	DIRECTIONAL DISTRIBUTION Northbound	DIRECTIONAL DISTRIBUTION Southbound
0:00	13	6	19	0.50%	0.23%	0.37%	68.42%	31.58%
1:00	2	5	7	0.08%	0.19%	0.13%	28.57%	71.43%
2:00	4	7	11	0.15%	0.27%	0.21%	36.36%	63.64%
3:00	5	6	11	0.19%	0.23%	0.21%	45.45%	54.55%
4:00	9	18	27	0.34%	0.69%	0.52%	33.33%	66.67%
5:00	35	32	67	1.34%	1.23%	1.29%	52.24%	47.76%
6:00	83	74	157	3.18%	2.85%	3.02%	52.87%	47.13%
7:00	212	157	369	8.12%	6.05%	7.09%	57.45%	42.55%
8:00	189	141	330	7.24%	5.43%	6.34%	57.27%	42.73%
9:00	141	135	276	5.40%	5.20%	5.30%	51.09%	48.91%
10:00	143	127	270	5.48%	4.89%	5.19%	52.96%	47.04%
11:00	130	127	257	4.98%	4.89%	4.94%	50.58%	49.42%
12:00	163	163	326	6.25%	6.28%	6.26%	50.00%	50.00%
13:00	168	160	328	6.44%	6.17%	6.30%	51.22%	48.78%
14:00	178	193	371	6.82%	7.44%	7.13%	47.98%	52.02%
15:00	205	217	422	7.85%	8.36%	8.11%	48.58%	51.42%
16:00	218	221	439	8.35%	8.52%	8.43%	49.66%	50.34%
17:00	234	267	501	8.97%	10.29%	9.63%	46.71%	53.29%
18:00	189	176	365	7.24%	6.78%	7.01%	51.78%	48.22%
19:00	86	124	210	3.30%	4.78%	4.03%	40.95%	59.05%
20:00	81	95	176	3.10%	3.66%	3.38%	46.02%	53.98%
21:00	60	80	140	2.30%	3.08%	2.69%	42.86%	57.14%
22:00	35	42	77	1.34%	1.62%	1.48%	45.45%	54.55%
23:00	27	22	49	1.03%	0.85%	0.94%	55.10%	44.90%
TOTALS	2,610	2,595	5,205	100.00%	100.00%	100.00%		

TRAFFIC COUNT DATA

DISTRICTWIDE PD&E

LINK: 1275

COUNT LOCATION: Belle Terre Blvd from Citation Pkwy to US 1

TYPE OF COUNT:

24 HOUR Classification Count

TIME OF COUNT:

Start Date:	Feb 3, 2015	Start Time:	00:00
End Date:	Feb 3, 2015	End Time:	24:00

VOLUMES:

Average Daily:	3,644	Average Peak Hour:	359
Daily Truck Avg:	73	Peak Hour Truck Avg:	1

TRAVEL CHARACTERISTICS:

Peak Hour:	17:00 to 18:00
Peak Direction:	Northbound
Peak to Daily Volume Ratio:	K = 0.099
Peak Direction Distribution Ratio:	D = 61.0%

T peak:	0.28%	T daily:	2.00%
T med:	0.28%	T med:	1.02%
T heavy:	0.00%	T heavy:	0.99%
T (Northbound):	0.00%	T (Northbound):	0.77%
T (Southbound):	0.28%	T (Southbound):	1.23%
T (Northbound)med:	0.00%	T (Northbound)med:	0.33%
T (Southbound)med:	0.28%	T (Southbound)med:	0.69%
T (Northbound)heavy:	0.00%	T (Northbound)heavy:	0.44%
T (Southbound)heavy:	0.00%	T (Southbound)heavy:	0.55%

HOURLY DISTRIBUTION OF TRAFFIC VOLUMES

DISTRICTWIDE PD&E

STATE PROJECT NO.: 1275
LOCATION CODE: 0
COUNT LOCATION: Belle Terre Blvd from Citation Pkwy to US 1

HOUR STARTS AT	HOURLY VOLUME Northbound	HOURLY VOLUME Southbound	TOTAL VOLUME BOTH DIRECTIONS	HOURLY DISTRIBUTION Northbound	HOURLY DISTRIBUTION Southbound	HOURLY DISTRIBUTION BOTH DIRECTIONS	DIRECTIONAL DISTRIBUTION Northbound	DIRECTIONAL DISTRIBUTION Southbound
0:00	9	4	13	0.50%	0.22%	0.36%	69.23%	30.77%
1:00	2	4	6	0.11%	0.22%	0.16%	33.33%	66.67%
2:00	6	5	11	0.33%	0.27%	0.30%	54.55%	45.45%
3:00	5	8	13	0.28%	0.44%	0.36%	38.46%	61.54%
4:00	5	18	23	0.28%	0.98%	0.63%	21.74%	78.26%
5:00	9	34	43	0.50%	1.85%	1.18%	20.93%	79.07%
6:00	36	100	136	1.99%	5.45%	3.73%	26.47%	73.53%
7:00	83	198	281	4.59%	10.80%	7.71%	29.54%	70.46%
8:00	91	157	248	5.03%	8.56%	6.81%	36.69%	63.31%
9:00	77	107	184	4.25%	5.83%	5.05%	41.85%	58.15%
10:00	76	100	176	4.20%	5.45%	4.83%	43.18%	56.82%
11:00	91	93	184	5.03%	5.07%	5.05%	49.46%	50.54%
12:00	95	98	193	5.25%	5.34%	5.30%	49.22%	50.78%
13:00	113	103	216	6.24%	5.62%	5.93%	52.31%	47.69%
14:00	119	130	249	6.57%	7.09%	6.83%	47.79%	52.21%
15:00	152	128	280	8.40%	6.98%	7.68%	54.29%	45.71%
16:00	175	133	308	9.67%	7.25%	8.45%	56.82%	43.18%
17:00	219	140	359	12.10%	7.63%	9.85%	61.00%	39.00%
18:00	165	96	261	9.12%	5.23%	7.16%	63.22%	36.78%
19:00	83	57	140	4.59%	3.11%	3.84%	59.29%	40.71%
20:00	74	48	122	4.09%	2.62%	3.35%	60.66%	39.34%
21:00	63	42	105	3.48%	2.29%	2.88%	60.00%	40.00%
22:00	38	20	58	2.10%	1.09%	1.59%	65.52%	34.48%
23:00	24	11	35	1.33%	0.60%	0.96%	68.57%	31.43%
TOTALS	1,810	1,834	3,644	100.00%	100.00%	100.00%		

TRAFFIC COUNT DATA

DISTRICTWIDE PD&E

LINK: 1265

COUNT LOCATION: Belle Terre Blvd from Zaun Trail to Zebulah's Trail

TYPE OF COUNT:

24 HOUR Classification Count

TIME OF COUNT:

Start Date:	Feb 3, 2015	Start Time:	00:00
End Date:	Feb 3, 2015	End Time:	24:00

VOLUMES:

Average Daily:	5,628	Average Peak Hour:	555
Daily Truck Avg:	97	Peak Hour Truck Avg:	1

TRAVEL CHARACTERISTICS:

Peak Hour:	16:45 to 17:45
Peak Direction:	Southbound
Peak to Daily Volume Ratio:	K = 0.099
Peak Direction Distribution Ratio:	D = 54.8%

T peak:	0.18%	T daily:	1.72%
T med:	0.18%	T med:	1.28%
T heavy:	0.00%	T heavy:	0.44%
T (Northbound):	0.18%	T (Northbound):	0.73%
T (Southbound):	0.00%	T (Southbound):	1.00%
T (Northbound)med:	0.18%	T (Northbound)med:	0.52%
T (Southbound)med:	0.00%	T (Southbound)med:	0.76%
T (Northbound)heavy:	0.00%	T (Northbound)heavy:	0.21%
T (Southbound)heavy:	0.00%	T (Southbound)heavy:	0.23%

HOURLY DISTRIBUTION OF TRAFFIC VOLUMES

DISTRICTWIDE PD&E

LINK: 1265

COUNT LOCATION: Belle Terre Blvd from Zaun Trail to Zebulah's Trail

HOUR STARTS AT	HOURLY VOLUME Northbound	HOURLY VOLUME Southbound	TOTAL VOLUME BOTH DIRECTIONS	HOURLY DISTRIBUTION Northbound	HOURLY DISTRIBUTION Southbound	HOURLY DISTRIBUTION BOTH DIRECTIONS	DIRECTIONAL DISTRIBUTION Northbound	DIRECTIONAL DISTRIBUTION Southbound
0:00	12	7	19	0.43%	0.25%	0.34%	63.16%	36.84%
1:00	3	6	9	0.11%	0.21%	0.16%	33.33%	66.67%
2:00	4	7	11	0.14%	0.25%	0.20%	36.36%	63.64%
3:00	5	6	11	0.18%	0.21%	0.20%	45.45%	54.55%
4:00	11	16	27	0.39%	0.57%	0.48%	40.74%	59.26%
5:00	39	32	71	1.38%	1.14%	1.26%	54.93%	45.07%
6:00	96	73	169	3.41%	2.60%	3.00%	56.80%	43.20%
7:00	237	162	399	8.41%	5.76%	7.09%	59.40%	40.60%
8:00	214	152	366	7.60%	5.41%	6.50%	58.47%	41.53%
9:00	157	136	293	5.57%	4.84%	5.21%	53.58%	46.42%
10:00	153	124	277	5.43%	4.41%	4.92%	55.23%	44.77%
11:00	143	133	276	5.08%	4.73%	4.90%	51.81%	48.19%
12:00	171	179	350	6.07%	6.37%	6.22%	48.86%	51.14%
13:00	182	182	364	6.46%	6.47%	6.47%	50.00%	50.00%
14:00	196	202	398	6.96%	7.19%	7.07%	49.25%	50.75%
15:00	215	256	471	7.63%	9.11%	8.37%	45.65%	54.35%
16:00	238	239	477	8.45%	8.50%	8.48%	49.90%	50.10%
17:00	247	308	555	8.77%	10.96%	9.86%	44.50%	55.50%
18:00	195	187	382	6.92%	6.65%	6.79%	51.05%	48.95%
19:00	86	137	223	3.05%	4.87%	3.96%	38.57%	61.43%
20:00	85	105	190	3.02%	3.74%	3.38%	44.74%	55.26%
21:00	64	91	155	2.27%	3.24%	2.75%	41.29%	58.71%
22:00	37	49	86	1.31%	1.74%	1.53%	43.02%	56.98%
23:00	27	22	49	0.96%	0.78%	0.87%	55.10%	44.90%
TOTALS	2,817	2,811	5,628	100.00%	100.00%	100.00%		

TRAFFIC COUNT DATA

DISTRICTWIDE PD&E

LINK: 1263

COUNT LOCATION: Belle Terre Blvd from Zebulas Trail to SR 100

TYPE OF COUNT:

24 HOUR Classification Count

TIME OF COUNT:

Start Date:	Feb 3, 2015	Start Time:	00:00
End Date:	Feb 3, 2015	End Time:	24:00

VOLUMES:

Average Daily:	6,784	Average Peak Hour:	651
Daily Truck Avg:	107	Peak Hour Truck Avg:	0

TRAVEL CHARACTERISTICS:

Peak Hour:	16:45 to 17:45
Peak Direction:	Southbound
Peak to Daily Volume Ratio:	K = 0.096
Peak Direction Distribution Ratio:	D = 57.0%

T peak:	0.00%	T daily:	1.58%
T med:	0.00%	T med:	0.96%
T heavy:	0.00%	T heavy:	0.62%
T (Northbound):	0.00%	T (Northbound):	0.84%
T (Southbound):	0.00%	T (Southbound):	0.74%
T (Northbound)med:	0.00%	T (Northbound)med:	0.49%
T (Southbound)med:	0.00%	T (Southbound)med:	0.47%
T (Northbound)heavy:	0.00%	T (Northbound)heavy:	0.35%
T (Southbound)heavy:	0.00%	T (Southbound)heavy:	0.27%

HOURLY DISTRIBUTION OF TRAFFIC VOLUMES

DISTRICTWIDE PD&E

STATE PROJECT NO.: 1263
LOCATION CODE: 0
COUNT LOCATION: Belle Terre Blvd from Zebulas Trail to SR 100

HOUR STARTS AT	HOURLY VOLUME Northbound	HOURLY VOLUME Southbound	TOTAL VOLUME BOTH DIRECTIONS	HOURLY DISTRIBUTION Northbound	HOURLY DISTRIBUTION Southbound	HOURLY DISTRIBUTION BOTH DIRECTIONS	DIRECTIONAL DISTRIBUTION Northbound	DIRECTIONAL DISTRIBUTION Southbound
0:00	11	7	18	0.32%	0.21%	0.27%	61.11%	38.89%
1:00	6	8	14	0.18%	0.24%	0.21%	42.86%	57.14%
2:00	5	9	14	0.15%	0.27%	0.21%	35.71%	64.29%
3:00	5	7	12	0.15%	0.21%	0.18%	41.67%	58.33%
4:00	19	15	34	0.56%	0.44%	0.50%	55.88%	44.12%
5:00	48	31	79	1.42%	0.91%	1.16%	60.76%	39.24%
6:00	128	67	195	3.77%	1.97%	2.87%	65.64%	34.36%
7:00	297	166	463	8.76%	4.89%	6.82%	64.15%	35.85%
8:00	277	190	467	8.17%	5.60%	6.88%	59.31%	40.69%
9:00	207	160	367	6.10%	4.72%	5.41%	56.40%	43.60%
10:00	207	158	365	6.10%	4.66%	5.38%	56.71%	43.29%
11:00	177	180	357	5.22%	5.31%	5.26%	49.58%	50.42%
12:00	214	211	425	6.31%	6.22%	6.26%	50.35%	49.65%
13:00	219	221	440	6.46%	6.51%	6.49%	49.77%	50.23%
14:00	245	251	496	7.23%	7.40%	7.31%	49.40%	50.60%
15:00	248	314	562	7.31%	9.25%	8.28%	44.13%	55.87%
16:00	264	291	555	7.79%	8.58%	8.18%	47.57%	52.43%
17:00	278	372	650	8.20%	10.96%	9.58%	42.77%	57.23%
18:00	214	235	449	6.31%	6.93%	6.62%	47.66%	52.34%
19:00	107	183	290	3.16%	5.39%	4.27%	36.90%	63.10%
20:00	92	128	220	2.71%	3.77%	3.24%	41.82%	58.18%
21:00	61	100	161	1.80%	2.95%	2.37%	37.89%	62.11%
22:00	37	57	94	1.09%	1.68%	1.39%	39.36%	60.64%
23:00	25	32	57	0.74%	0.94%	0.84%	43.86%	56.14%
TOTALS	3,391	3,393	6,784	100.00%	100.00%	100.00%		

TRAFFIC COUNT DATA

DISTRICTWIDE PD&E

STATE PROJECT NO.: 0
LOCATION CODE: 1254
COUNT LOCATION: Belle Terre Pkwy from Easthampton Blvd to Royal Palms Pkwy

TYPE OF COUNT:

24 Hour Volume Count

TIME OF COUNT:

Start Date: Jan 13, 2015 Start Time: 00:00
End Date: Jan 13, 2015 End Time: 24:00

VOLUMES:

Average Daily: 26,097 Average Peak Hour: 2,234

TRAVEL CHARACTERISTICS:

Peak Hour: 15:30 to 16:30
Peak Direction: Northbound
Peak to Daily Volume Ratio: K = 0.086
Peak Direction Distribution Ratio: D = 52.7%

HOURLY DISTRIBUTION OF TRAFFIC VOLUMES

DISTRICTWIDE PD&E

STATE PROJECT NO.: 0
LOCATION CODE: 1254
COUNT LOCATION: Belle Terre Pkwy from Easthampton Blvd to Royal Palms Pkwy

HOUR STARTS AT	HOURLY VOLUME Northbound	HOURLY VOLUME Southbound	TOTAL VOLUME BOTH DIRECTIONS	HOURLY DISTRIBUTION Northbound	HOURLY DISTRIBUTION Southbound	HOURLY DISTRIBUTION BOTH DIRECTIONS	DIRECTIONAL DISTRIBUTION Northbound	DIRECTIONAL DISTRIBUTION Southbound
0:00	65	46	111	0.51%	0.34%	0.43%	58.56%	41.44%
1:00	37	33	70	0.29%	0.25%	0.27%	52.86%	47.14%
2:00	31	19	50	0.24%	0.14%	0.19%	62.00%	38.00%
3:00	18	24	42	0.14%	0.18%	0.16%	42.86%	57.14%
4:00	29	88	117	0.23%	0.66%	0.45%	24.79%	75.21%
5:00	70	200	270	0.55%	1.50%	1.03%	25.93%	74.07%
6:00	218	490	708	1.71%	3.66%	2.71%	30.79%	69.21%
7:00	487	1103	1590	3.83%	8.25%	6.09%	30.63%	69.37%
8:00	578	903	1481	4.54%	6.75%	5.67%	39.03%	60.97%
9:00	583	833	1416	4.58%	6.23%	5.43%	41.17%	58.83%
10:00	701	739	1440	5.51%	5.53%	5.52%	48.68%	51.32%
11:00	737	865	1602	5.79%	6.47%	6.14%	46.00%	54.00%
12:00	852	868	1720	6.70%	6.49%	6.59%	49.53%	50.47%
13:00	923	1035	1958	7.25%	7.74%	7.50%	47.14%	52.86%
14:00	1103	1042	2145	8.67%	7.79%	8.22%	51.42%	48.58%
15:00	1049	1095	2144	8.24%	8.19%	8.22%	48.93%	51.07%
16:00	1223	981	2204	9.61%	7.34%	8.45%	55.49%	44.51%
17:00	1162	986	2148	9.13%	7.37%	8.23%	54.10%	45.90%
18:00	930	787	1717	7.31%	5.89%	6.58%	54.16%	45.84%
19:00	653	445	1098	5.13%	3.33%	4.21%	59.47%	40.53%
20:00	545	344	889	4.28%	2.57%	3.41%	61.30%	38.70%
21:00	391	216	607	3.07%	1.62%	2.33%	64.42%	35.58%
22:00	205	143	348	1.61%	1.07%	1.33%	58.91%	41.09%
23:00	135	87	222	1.06%	0.65%	0.85%	60.81%	39.19%
TOTALS	12,725	13,372	26,097	100.00%	100.00%	100.00%		

TRAFFIC COUNT DATA

DISTRICTWIDE PD&E

LINK: 1240

COUNT LOCATION: Belle Terre Pkwy from Parkview Dr to Pine Lakes Pkwy

TYPE OF COUNT:

24 Hour Volume Count

TIME OF COUNT:

Start Date: Jan 8, 2015 Start Time: 00:00

End Date: Jan 8, 2015 End Time: 24:00

VOLUMES:

Average Daily: 25,550 Average Peak Hour: 2,179

TRAVEL CHARACTERISTICS:

Peak Hour: 15:00 to 16:00

Peak Direction: Northbound

Peak to Daily Volume Ratio: K = 0.085

Peak Direction Distribution Ratio: D = 53.3%

HOURLY DISTRIBUTION OF TRAFFIC VOLUMES

DISTRICTWIDE PD&E

STATE PROJECT NO.: 1240
LOCATION CODE: 0
COUNT LOCATION: Belle Terre Pkwy from Parkview Dr to Pine Lakes Pkwy

HOUR STARTS AT	HOURLY VOLUME Northbound	HOURLY VOLUME Southbound	TOTAL VOLUME BOTH DIRECTIONS	HOURLY DISTRIBUTION Northbound	HOURLY DISTRIBUTION Southbound	HOURLY DISTRIBUTION BOTH DIRECTIONS	DIRECTIONAL DISTRIBUTION Northbound	DIRECTIONAL DISTRIBUTION Southbound
0:00	49	80	129	0.36%	0.68%	0.50%	37.98%	62.02%
1:00	37	41	78	0.27%	0.35%	0.31%	47.44%	52.56%
2:00	49	39	88	0.36%	0.33%	0.34%	55.68%	44.32%
3:00	33	23	56	0.24%	0.20%	0.22%	58.93%	41.07%
4:00	62	31	93	0.45%	0.26%	0.36%	66.67%	33.33%
5:00	154	71	225	1.12%	0.60%	0.88%	68.44%	31.56%
6:00	380	229	609	2.76%	1.95%	2.38%	62.40%	37.60%
7:00	855	465	1320	6.20%	3.95%	5.17%	64.77%	35.23%
8:00	1002	542	1544	7.27%	4.61%	6.04%	64.90%	35.10%
9:00	848	579	1427	6.15%	4.92%	5.59%	59.43%	40.57%
10:00	875	643	1518	6.35%	5.47%	5.94%	57.64%	42.36%
11:00	869	710	1579	6.30%	6.03%	6.18%	55.03%	44.97%
12:00	930	818	1748	6.75%	6.95%	6.84%	53.20%	46.80%
13:00	914	855	1769	6.63%	7.27%	6.92%	51.67%	48.33%
14:00	1038	916	1954	7.53%	7.79%	7.65%	53.12%	46.88%
15:00	1161	1018	2179	8.42%	8.65%	8.53%	53.28%	46.72%
16:00	1040	987	2027	7.54%	8.39%	7.93%	51.31%	48.69%
17:00	977	1051	2028	7.09%	8.93%	7.94%	48.18%	51.82%
18:00	765	893	1658	5.55%	7.59%	6.49%	46.14%	53.86%
19:00	596	637	1233	4.32%	5.41%	4.83%	48.34%	51.66%
20:00	429	425	854	3.11%	3.61%	3.34%	50.23%	49.77%
21:00	316	327	643	2.29%	2.78%	2.52%	49.14%	50.86%
22:00	251	222	473	1.82%	1.89%	1.85%	53.07%	46.93%
23:00	155	163	318	1.12%	1.39%	1.24%	48.74%	51.26%
TOTALS	13,785	11,765	25,550	100.00%	100.00%	100.00%		

TRAFFIC COUNT DATA

DISTRICTWIDE PD&E

STATE PROJECT NO.: 0
LOCATION CODE: 1252
COUNT LOCATION: Belle Terre Pkwy from Royal Palms Pkwy to Rymfire Drive

TYPE OF COUNT:

24 Hour Volume Count

TIME OF COUNT:

Start Date: Jan 13, 2015 Start Time: 00:00
End Date: Jan 13, 2015 End Time: 24:00

VOLUMES:

Average Daily: 26,612 Average Peak Hour: 2,254

TRAVEL CHARACTERISTICS:

Peak Hour: 16:00 to 17:00
Peak Direction: Northbound
Peak to Daily Volume Ratio: K = 0.085
Peak Direction Distribution Ratio: D = 60.6%

HOURLY DISTRIBUTION OF TRAFFIC VOLUMES

DISTRICTWIDE PD&E

STATE PROJECT NO.: 0
LOCATION CODE: 1252
COUNT LOCATION: Belle Terre Pkwy from Royal Palms Pkwy to Rymfire Drive

HOUR STARTS AT	HOURLY VOLUME Northbound	HOURLY VOLUME Southbound	TOTAL VOLUME BOTH DIRECTIONS	HOURLY DISTRIBUTION Northbound	HOURLY DISTRIBUTION Southbound	HOURLY DISTRIBUTION BOTH DIRECTIONS	DIRECTIONAL DISTRIBUTION Northbound	DIRECTIONAL DISTRIBUTION Southbound
0:00	87	47	134	0.64%	0.36%	0.50%	64.93%	35.07%
1:00	52	25	77	0.38%	0.19%	0.29%	67.53%	32.47%
2:00	38	23	61	0.28%	0.18%	0.23%	62.30%	37.70%
3:00	26	27	53	0.19%	0.21%	0.20%	49.06%	50.94%
4:00	27	94	121	0.20%	0.72%	0.45%	22.31%	77.69%
5:00	61	236	297	0.45%	1.80%	1.12%	20.54%	79.46%
6:00	191	525	716	1.41%	4.01%	2.69%	26.68%	73.32%
7:00	448	1235	1683	3.31%	9.43%	6.32%	26.62%	73.38%
8:00	650	1022	1672	4.81%	7.81%	6.28%	38.88%	61.12%
9:00	562	824	1386	4.16%	6.29%	5.21%	40.55%	59.45%
10:00	692	762	1454	5.12%	5.82%	5.46%	47.59%	52.41%
11:00	776	803	1579	5.74%	6.13%	5.93%	49.15%	50.85%
12:00	848	816	1664	6.27%	6.23%	6.25%	50.96%	49.04%
13:00	973	969	1942	7.20%	7.40%	7.30%	50.10%	49.90%
14:00	1115	1033	2148	8.25%	7.89%	8.07%	51.91%	48.09%
15:00	1190	1021	2211	8.80%	7.80%	8.31%	53.82%	46.18%
16:00	1367	887	2254	10.11%	6.77%	8.47%	60.65%	39.35%
17:00	1285	855	2140	9.51%	6.53%	8.04%	60.05%	39.95%
18:00	1000	719	1719	7.40%	5.49%	6.46%	58.17%	41.83%
19:00	715	405	1120	5.29%	3.09%	4.21%	63.84%	36.16%
20:00	578	317	895	4.28%	2.42%	3.36%	64.58%	35.42%
21:00	433	209	642	3.20%	1.60%	2.41%	67.45%	32.55%
22:00	230	156	386	1.70%	1.19%	1.45%	59.59%	40.41%
23:00	174	84	258	1.29%	0.64%	0.97%	67.44%	32.56%
TOTALS	13,518	13,094	26,612	100.00%	100.00%	100.00%		

TRAFFIC COUNT DATA

DISTRICTWIDE PD&E

STATE PROJECT NO.: 0
LOCATION CODE: 1250
COUNT LOCATION: Belle Terre Pkwy from Whiteview Pkwy to Rymfire Drive

TYPE OF COUNT:

24 Hour Volume Count

TIME OF COUNT:

Start Date: Jan 13, 2015 Start Time: 00:00
End Date: Jan 13, 2015 End Time: 24:00

VOLUMES:

Average Daily: 24,417 Average Peak Hour: 2,089

TRAVEL CHARACTERISTICS:

Peak Hour: 16:30 to 17:30
Peak Direction: Northbound
Peak to Daily Volume Ratio: K = 0.086
Peak Direction Distribution Ratio: D = 56.7%

HOURLY DISTRIBUTION OF TRAFFIC VOLUMES

DISTRICTWIDE PD&E

STATE PROJECT NO.: 0
LOCATION CODE: 1250
COUNT LOCATION: Belle Terre Pkwy from Whiteview Pkwy to Rymfire Drive

HOUR STARTS AT	HOURLY VOLUME Northbound	HOURLY VOLUME Southbound	TOTAL VOLUME BOTH DIRECTIONS	HOURLY DISTRIBUTION Northbound	HOURLY DISTRIBUTION Southbound	HOURLY DISTRIBUTION BOTH DIRECTIONS	DIRECTIONAL DISTRIBUTION Northbound	DIRECTIONAL DISTRIBUTION Southbound
0:00	73	66	139	0.59%	0.55%	0.57%	52.52%	47.48%
1:00	42	36	78	0.34%	0.30%	0.32%	53.85%	46.15%
2:00	36	22	58	0.29%	0.18%	0.24%	62.07%	37.93%
3:00	27	20	47	0.22%	0.17%	0.19%	57.45%	42.55%
4:00	36	62	98	0.29%	0.52%	0.40%	36.73%	63.27%
5:00	96	157	253	0.77%	1.31%	1.04%	37.94%	62.06%
6:00	234	376	610	1.88%	3.14%	2.50%	38.36%	61.64%
7:00	556	898	1454	4.47%	7.50%	5.95%	38.24%	61.76%
8:00	715	807	1522	5.75%	6.74%	6.23%	46.98%	53.02%
9:00	605	684	1289	4.86%	5.71%	5.28%	46.94%	53.06%
10:00	667	649	1316	5.36%	5.42%	5.39%	50.68%	49.32%
11:00	737	777	1514	5.93%	6.49%	6.20%	48.68%	51.32%
12:00	839	775	1614	6.75%	6.47%	6.61%	51.98%	48.02%
13:00	889	914	1803	7.15%	7.63%	7.38%	49.31%	50.69%
14:00	1022	973	1995	8.22%	8.12%	8.17%	51.23%	48.77%
15:00	1026	1026	2052	8.25%	8.56%	8.40%	50.00%	50.00%
16:00	1204	856	2060	9.68%	7.15%	8.44%	58.45%	41.55%
17:00	1072	890	1962	8.62%	7.43%	8.04%	54.64%	45.36%
18:00	853	679	1532	6.86%	5.67%	6.27%	55.68%	44.32%
19:00	576	437	1013	4.63%	3.65%	4.15%	56.86%	43.14%
20:00	440	360	800	3.54%	3.01%	3.28%	55.00%	45.00%
21:00	357	243	600	2.87%	2.03%	2.46%	59.50%	40.50%
22:00	198	172	370	1.59%	1.44%	1.52%	53.51%	46.49%
23:00	137	101	238	1.10%	0.84%	0.97%	57.56%	42.44%
TOTALS	12,437	11,980	24,417	100.00%	100.00%	100.00%		

TRAFFIC COUNT DATA

DISTRICTWIDE PD&E

LINK: 1260

COUNT LOCATION: Belle Terre Pkwy from SR 100 to East Hampton Blvd

TYPE OF COUNT:

24 Hour Volume Count

TIME OF COUNT:

Start Date: Jan 13, 2015 Start Time: 00:00

End Date: Jan 13, 2015 End Time: 24:00

VOLUMES:

Average Daily: 23,264 Average Peak Hour: 1,994

TRAVEL CHARACTERISTICS:

Peak Hour: 16:45 to 17:45

Peak Direction: Northbound

Peak to Daily Volume Ratio: K = 0.086

Peak Direction Distribution Ratio: D = 60.2%

HOURLY DISTRIBUTION OF TRAFFIC VOLUMES

DISTRICTWIDE PD&E

LINK: 1260

COUNT LOCATION: Belle Terre Pkwy from SR 100 to East Hampton Blvd

HOUR STARTS AT	HOURLY VOLUME Northbound	HOURLY VOLUME Southbound	TOTAL VOLUME BOTH DIRECTIONS	HOURLY DISTRIBUTION Northbound	HOURLY DISTRIBUTION Southbound	HOURLY DISTRIBUTION BOTH DIRECTIONS	DIRECTIONAL DISTRIBUTION Northbound	DIRECTIONAL DISTRIBUTION Southbound
0:00	64	38	102	0.54%	0.33%	0.44%	62.75%	37.25%
1:00	38	20	58	0.32%	0.18%	0.25%	65.52%	34.48%
2:00	29	20	49	0.24%	0.18%	0.21%	59.18%	40.82%
3:00	17	21	38	0.14%	0.18%	0.16%	44.74%	55.26%
4:00	21	86	107	0.18%	0.75%	0.46%	19.63%	80.37%
5:00	47	208	255	0.40%	1.82%	1.10%	18.43%	81.57%
6:00	167	487	654	1.41%	4.27%	2.81%	25.54%	74.46%
7:00	378	957	1335	3.19%	8.40%	5.74%	28.31%	71.69%
8:00	475	811	1286	4.00%	7.12%	5.53%	36.94%	63.06%
9:00	518	759	1277	4.37%	6.66%	5.49%	40.56%	59.44%
10:00	651	710	1361	5.49%	6.23%	5.85%	47.83%	52.17%
11:00	705	768	1473	5.94%	6.74%	6.33%	47.86%	52.14%
12:00	877	784	1661	7.39%	6.88%	7.14%	52.80%	47.20%
13:00	864	886	1750	7.28%	7.77%	7.52%	49.37%	50.63%
14:00	985	864	1849	8.30%	7.58%	7.95%	53.27%	46.73%
15:00	1082	861	1943	9.12%	7.55%	8.35%	55.69%	44.31%
16:00	1188	778	1966	10.01%	6.83%	8.45%	60.43%	39.57%
17:00	1160	780	1940	9.78%	6.84%	8.34%	59.79%	40.21%
18:00	822	583	1405	6.93%	5.11%	6.04%	58.51%	41.49%
19:00	590	372	962	4.97%	3.26%	4.14%	61.33%	38.67%
20:00	518	244	762	4.37%	2.14%	3.28%	67.98%	32.02%
21:00	345	183	528	2.91%	1.61%	2.27%	65.34%	34.66%
22:00	192	113	305	1.62%	0.99%	1.31%	62.95%	37.05%
23:00	133	65	198	1.12%	0.57%	0.85%	67.17%	32.83%
TOTALS	11,866	11,398	23,264	100.00%	100.00%	100.00%		

TRAFFIC COUNT DATA

DISTRICTWIDE PD&E

LINK: 1245

COUNT LOCATION: Belle Terre Pkwy from Whiteview Pkwy to Parkview Dr (S)

TYPE OF COUNT:

24 Hour Volume Count

TIME OF COUNT:

Start Date: Jan 13, 2015 Start Time: 00:00

End Date: Jan 13, 2015 End Time: 24:00

VOLUMES:

Average Daily: 25,411 Average Peak Hour: 2,246

TRAVEL CHARACTERISTICS:

Peak Hour: 16:15 to 17:15

Peak Direction: Southbound

Peak to Daily Volume Ratio: K = 0.088

Peak Direction Distribution Ratio: D = 50.8%

HOURLY DISTRIBUTION OF TRAFFIC VOLUMES

DISTRICTWIDE PD&E

STATE PROJECT NO.: 1245
LOCATION CODE: 0
COUNT LOCATION: Belle Terre Pkwy from Whiteview Pkwy to Parkview Dr (S)

HOUR STARTS AT	HOURLY VOLUME Northbound	HOURLY VOLUME Southbound	TOTAL VOLUME BOTH DIRECTIONS	HOURLY DISTRIBUTION Northbound	HOURLY DISTRIBUTION Southbound	HOURLY DISTRIBUTION BOTH DIRECTIONS	DIRECTIONAL DISTRIBUTION Northbound	DIRECTIONAL DISTRIBUTION Southbound
0:00	70	97	167	0.55%	0.77%	0.66%	41.92%	58.08%
1:00	34	55	89	0.27%	0.44%	0.35%	38.20%	61.80%
2:00	37	19	56	0.29%	0.15%	0.22%	66.07%	33.93%
3:00	23	13	36	0.18%	0.10%	0.14%	63.89%	36.11%
4:00	59	33	92	0.46%	0.26%	0.36%	64.13%	35.87%
5:00	143	70	213	1.12%	0.55%	0.84%	67.14%	32.86%
6:00	352	220	572	2.75%	1.74%	2.25%	61.54%	38.46%
7:00	797	660	1457	6.23%	5.23%	5.73%	54.70%	45.30%
8:00	921	646	1567	7.20%	5.12%	6.17%	58.77%	41.23%
9:00	730	641	1371	5.71%	5.08%	5.40%	53.25%	46.75%
10:00	765	642	1407	5.98%	5.09%	5.54%	54.37%	45.63%
11:00	796	812	1608	6.22%	6.43%	6.33%	49.50%	50.50%
12:00	869	810	1679	6.80%	6.42%	6.61%	51.76%	48.24%
13:00	934	990	1924	7.30%	7.84%	7.57%	48.54%	51.46%
14:00	1005	1008	2013	7.86%	7.99%	7.92%	49.93%	50.07%
15:00	981	1165	2146	7.67%	9.23%	8.45%	45.71%	54.29%
16:00	1103	1074	2177	8.63%	8.51%	8.57%	50.67%	49.33%
17:00	972	1079	2051	7.60%	8.55%	8.07%	47.39%	52.61%
18:00	746	842	1588	5.83%	6.67%	6.25%	46.98%	53.02%
19:00	488	568	1056	3.82%	4.50%	4.16%	46.21%	53.79%
20:00	384	478	862	3.00%	3.79%	3.39%	44.55%	55.45%
21:00	280	325	605	2.19%	2.57%	2.38%	46.28%	53.72%
22:00	182	236	418	1.42%	1.87%	1.64%	43.54%	56.46%
23:00	117	140	257	0.91%	1.11%	1.01%	45.53%	54.47%
TOTALS	12,788	12,623	25,411	100.00%	100.00%	100.00%		

Site Information	
Feature	**1**
Site	738004
Description	BELLE TERRE BLVD., N OF US-1/SR-5 - OFF SYSTEM
Section	73000011
Milepoint	0.5
AADT	**3200**
Site Type	Portable
Class Data	No
K Factor	9
D Factor	62.5
T Factor	7
TRAFFIC REPORTS (provided in format)	
Flagler County	**Annual Average Daily Traffic**
	Historical AADT Data
	No Synopsis Report Available

Print this window. Close this window.

Site Information	
Feature	**1**
Site	737002
Description	BELLE TERR PARKWAY, US-1 TO MOODY BLVD. (HPMS)
Section	73000011
Milepoint	2.55
AADT	**5200**
Site Type	Portable
Class Data	Yes
K Factor	9
D Factor	62.5
T Factor	2.2
TRAFFIC REPORTS (provided in format)	
Flagler County	**Annual Average Daily Traffic**
	Annual Vehicle Classification
	Historical AADT Data
	Synopsis 737002CL-20140709
	Vehicle Class History

Print this window. Close this window.

Site Information	
Feature	**1**
Site	738024
Description	BELLE TERRE PARKWAY, N OF SR-100/MOODY BLVD. - OFF SYSTEM
Section	73517000
Milepoint	0.5
AADT	**23500**
Site Type	Portable
Class Data	No
K Factor	9
D Factor	62.5
T Factor	7
TRAFFIC REPORTS (provided in format)	
Flagler County	**Annual Average Daily Traffic**
	Historical AADT Data
	No Synopsis Report Available

Print this window. Close this window.

FLORIDA DEPARTMENT OF TRANSPORTATION
TRANSPORTATION STATISTICS OFFICE
2014 VEHICLE CLASS HISTORY DATA

COUNTY: 73 -- FLAGLER
SITE: 0101 DESCRIPTION: ON SR-5 (US-1), 1.05 MI. S OF SR-11 (RCLP)

		PASSENGER VEHICLES		TOTAL TRUCKS		SINGLE UNIT TRUCKS		COMBINATION TRAILER TRUCKS		MULTI TRAILER TRUCKS	
YEAR	AADT	%	VOLUME	%	VOLUME	%	VOLUME	%	VOLUME	%	VOLUME
2014	9700	90.45	8,774	9.55	926	4.69	455	4.79	465	0.07	7
2013	9700	92.32	8,955	7.68	745	4.20	407	3.43	333	0.05	5
2012	9600	90.86	8,723	9.14	877	4.92	472	4.17	400	0.05	5
2011	10200	90.69	9,250	9.31	950	4.55	464	4.65	474	0.11	11
2009	10400	89.97	9,357	10.03	1,043	5.31	552	4.56	474	0.16	17
2008	11900	89.15	10,609	10.85	1,291	6.21	739	4.49	534	0.15	18
2007	13100	88.21	11,556	11.79	1,544	6.26	820	5.32	697	0.21	28
2006	13800	89.33	12,328	10.67	1,472	6.06	836	4.50	621	0.11	15
2005	12700	88.90	11,290	11.10	1,410	6.09	774	4.68	594	0.33	42
2004	11300	88.22	9,969	11.78	1,331	6.20	701	5.33	602	0.25	28
2003	9400	87.50	8,225	12.50	1,175	6.20	583	6.00	564	0.30	28
2002	8500	88.09	7,487	11.91	1,013	5.81	493	5.91	502	0.20	17
2001	8500	0.00	0	0.00	0	0.00	0	0.00	0	0.00	0
2000	8600	0.00	0	0.00	0	0.00	0	0.00	0	0.00	0
1999	8000	0.00	0	0.00	0	0.00	0	0.00	0	0.00	0

NOTE: 1 - PASSENGER VEHICLES = VEHICLE CLASS 1-3, 14, 15
2 - TOTAL TRUCKS = VEHICLE CLASS 4-13
3 - SINGLE UNIT TRUCKS = VEHICLE CLASS 4-7
4 - COMBINATION TRAILER TRUCKS = VEHICLE CLASS 8-10
5 - MULTI TRAILER TRUCKS = VEHICLE CLASS 11-13

FLORIDA DEPARTMENT OF TRANSPORTATION
TRANSPORTATION STATISTICS OFFICE
2014 HISTORICAL AADT REPORT

COUNTY: 73 - FLAGLER

SITE: 0235 - ON SR-5 (US-1), 0.149 MI. N OF OLD DIXIE HWY. (RVL)

YEAR	AADT	DIRECTION 1	DIRECTION 2	*K FACTOR	D FACTOR	T FACTOR
2014	13600 C	N 6800	S 6800	9.00	62.50	10.60
2013	12800 C	N 6400	S 6400	9.00	60.70	11.10
2012	12700 C	N 6400	S 6300	9.00	60.90	7.90
2011	13300 C	N 6700	S 6600	9.00	61.50	7.40
2010	14100 C	N 7100	S 7000	9.79	57.48	7.30
2009	14300 C	N 7100	S 7200	10.15	58.20	7.20
2008	16700 C	N 8500	S 8200	10.39	60.51	8.50
2007	18200 C	N 9300	S 8900	9.41	60.67	8.70
2006	17100 C	N 8500	S 8600	9.99	57.72	10.20
2005	16300 C	N 8000	S 8300	10.50	56.60	10.10
2004	15100 C	N 7400	S 7700	10.20	60.00	10.40
2003	12000 C	N 6000	S 6000	10.20	57.20	8.80
2002	10800 C	N 5400	S 5400	9.60	55.60	7.80
2001	9900 C	N 5000	S 4900	10.60	54.60	6.20
2000	10300 C	N 5100	S 5200	9.80	58.50	7.00
1999	9600 C	N 4800	S 4800	9.40	56.30	7.50

AADT FLAGS: C = COMPUTED; E = MANUAL ESTIMATE; F = FIRST YEAR ESTIMATE
S = SECOND YEAR ESTIMATE; T = THIRD YEAR ESTIMATE; F = FOURTH YEAR ESTIMATE
V = FIFTH YEAR ESTIMATE; 6 = SIXTH YEAR ESTIMATE; X = UNKNOWN
*K FACTOR: STARTING WITH YEAR 2011 IS STANDARDK, PRIOR YEARS ARE K30 VALUES

Site Information	
Feature	**1**
Site	738008
Description	CITATION BLVD., E OF BELLE TERRE PARKWAY - OFF SYSTEM
Section	73000025
Milepoint	0.5
AADT	**400**
Site Type	Portable
Class Data	No
K Factor	9
D Factor	62.5
T Factor	7
TRAFFIC REPORTS (provided in format)	
Flagler County	**Annual Average Daily Traffic**
	Historical AADT Data
	No Synopsis Report Available

Print this window. Close this window.

Site Information	
Feature	**1**
Site	730054
Description	ON SR-100, 1.94 MI. NE OF SR-5 (RV)
Section	73020000
Milepoint	1.94
AADT	**13900**
Site Type	Portable
Class Data	No
K Factor	9
D Factor	62.5
T Factor	9.5
TRAFFIC REPORTS (provided in format)	
Flagler County	**Annual Average Daily Traffic**
	Historical AADT Data
	Synopsis 730054-20140422 **Synopsis 730054-20140423**

Print this window. Close this window.

Site Information	
Feature	**1**
Site	730002
Description	ON SR-100, 0.3 MI. E OF BELLE TERRE PKWY (UCLP)
Section	73020000
Milepoint	2.747
AADT	**19600**
Site Type	Portable
Class Data	Yes
K Factor	9
D Factor	62.5
T Factor	7.8
TRAFFIC REPORTS (provided in format)	
Flagler County	**Annual Average Daily Traffic**
	Annual Vehicle Classification
	Historical AADT Data
	Synopsis 730002CL-20140422 **Synopsis 730002CL-20140423**
	Vehicle Class History

Print this window. Close this window.

Site Information	
Feature	**1**
Site	738011
Description	EASTHAMPTON BLVD., W OF BELLE TERRE PARKWAY - OFF SYSTEM
Section	73000028
Milepoint	0.5
AADT	**5500**
Site Type	Portable
Class Data	No
K Factor	9
D Factor	62.5
T Factor	7
TRAFFIC REPORTS (provided in format)	
Flagler County	**Annual Average Daily Traffic**
	Historical AADT Data
	No Synopsis Report Available

Print this window. Close this window.

Site Information	
Feature	**1**
Site	738013
Description	ROYAL PALMS PARKWAY, E OF BELLE TERR E PARKWAY - OFF SYSTEM
Section	73000031
Milepoint	0.5
AADT	**5400**
Site Type	Portable
Class Data	No
K Factor	9
D Factor	62.5
T Factor	7
TRAFFIC REPORTS (provided in format)	
Flagler County	**Annual Average Daily Traffic**
	Historical AADT Data
	No Synopsis Report Available

Print this window. Close this window.

Site Information	
Feature	**1**
Site	738014
Description	RYMFIRE DRIVE, N OF ROYAL PALMS PARKWAY - OFF SYSTEM
Section	73000032
Milepoint	0.5
AADT	**2700**
Site Type	Portable
Class Data	No
K Factor	9
D Factor	62.5
T Factor	7
TRAFFIC REPORTS (provided in format)	
Flagler County	**Annual Average Daily Traffic**
	Historical AADT Data
	No Synopsis Report Available

Print this window. Close this window.

Site Information	
Feature	**1**
Site	738016
Description	WHITEVIEW PARKWAY, E OF US-1/SR-5 - OFF SYSTEM
Section	73000034
Milepoint	0.5
AADT	**5400**
Site Type	Portable
Class Data	No
K Factor	9
D Factor	62.5
T Factor	7
TRAFFIC REPORTS (provided in format)	
Flagler County	**Annual Average Daily Traffic**
	Historical AADT Data
	No Synopsis Report Available

Print this window. Close this window.

Site Information	
Feature	**1**
Site	738025
Description	PINE LAKE PARKWAY, N OF BELLE TERRE PA RKWAY SOUTH - OFF SYSTEM
Section	73519000
Milepoint	0.5
AADT	**3900**
Site Type	Portable
Class Data	No
K Factor	9
D Factor	62.5
T Factor	7
TRAFFIC REPORTS (provided in format)	
Flagler County	**Annual Average Daily Traffic**
	Historical AADT Data
	No Synopsis Report Available

Print this window. Close this window.

Roadway Count Summary

Vanasse Hangen Brustlin, Inc.

County	Flagler	**City**	Palm Coast
Intersection	Belle Terre Blvd	&	US1
Date	September 1, 2015		**All Vehicles**
Time Period	7:00 to 9:00		

VHB Project #: 62393

Time Period	Northbound Left	Northbound Through	Northbound Right	Southbound Left	Southbound Through	Southbound Right
7:00 - 7:15	0	0	0	48	0	8
7:15 - 7:30	0	0	0	49	0	10
7:30 - 7:45	0	0	0	60	0	9
7:45 - 8:00	0	0	0	51	0	10
8:00 - 8:15	0	0	0	31	0	10
8:15 - 8:30	0	0	0	43	0	14
8:30 - 8:45	0	0	0	31	0	7
8:45 - 9:00	0	0	0	35	0	6
	0	0	0	348	0	74

Time Period	Eastbound Left	Eastbound Through	Eastbound Right	Westbound Left	Westbound Through	Westbound Right
7:00 - 7:15	0	98	0	0	60	5
7:15 - 7:30	4	121	0	0	71	13
7:30 - 7:45	1	153	0	0	84	14
7:45 - 8:00	1	113	0	0	123	15
8:00 - 8:15	4	81	0	0	108	20
8:15 - 8:30	4	108	0	0	87	15
8:30 - 8:45	7	104	0	0	87	14
8:45 - 9:00	4	95	0	0	74	18
	25	873	0	0	694	114

North / South
Belle Terre Blvd

East / West
US1

Peak Hour
7:30 - 8:30

Peak Hour Factor
0.90

Total Pk Hr Voume
1,159

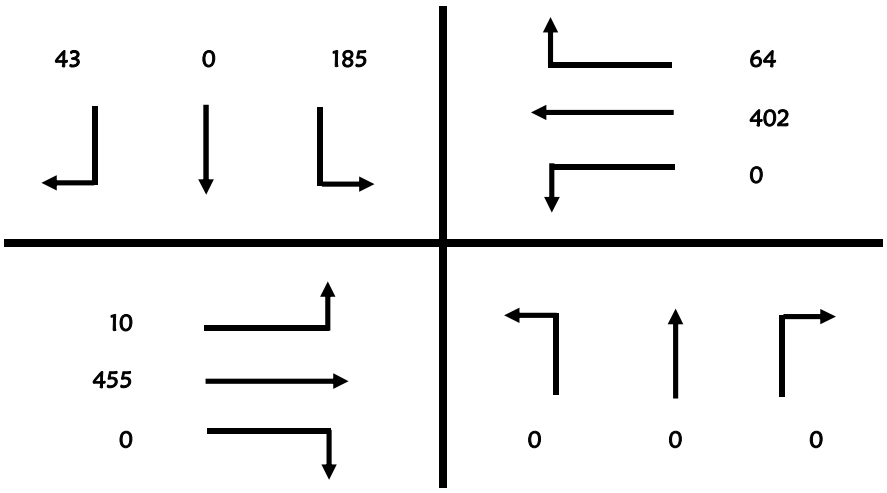

Roadway Count Summary

Vanasse Hangen Brustlin, Inc.

County	Flagler	**City**	Palm Coast
Intersection	Belle Terre Blvd	&	US1
Date	September 1, 2015		
Time Period	7:00 to 9:00		**Trucks**

VHB Project #: 62393

Time Period	Northbound			Southbound		
	Left	Through	Right	Left	Through	Right
7:00 - 7:15	0	0	0	1	0	0
7:15 - 7:30	0	0	0	1	0	0
7:30 - 7:45	0	0	0	0	0	0
7:45 - 8:00	0	0	0	1	0	0
8:00 - 8:15	0	0	0	1	0	0
8:15 - 8:30	0	0	0	0	0	1
8:30 - 8:45	0	0	0	0	0	0
8:45 - 9:00	0	0	0	1	0	2

Time Period	Eastbound			Westbound		
	Left	Through	Right	Left	Through	Right
7:00 - 7:15	0	10	0	0	5	1
7:15 - 7:30	1	4	0	0	4	3
7:30 - 7:45	0	12	0	0	6	2
7:45 - 8:00	0	2	0	0	4	0
8:00 - 8:15	0	4	0	0	4	1
8:15 - 8:30	1	7	0	0	3	0
8:30 - 8:45	1	1	0	0	10	4
8:45 - 9:00	0	3	0	0	7	1

North / South
Belle Terre Blvd

East / West
US1

Peak Hour
7:30 - 8:30

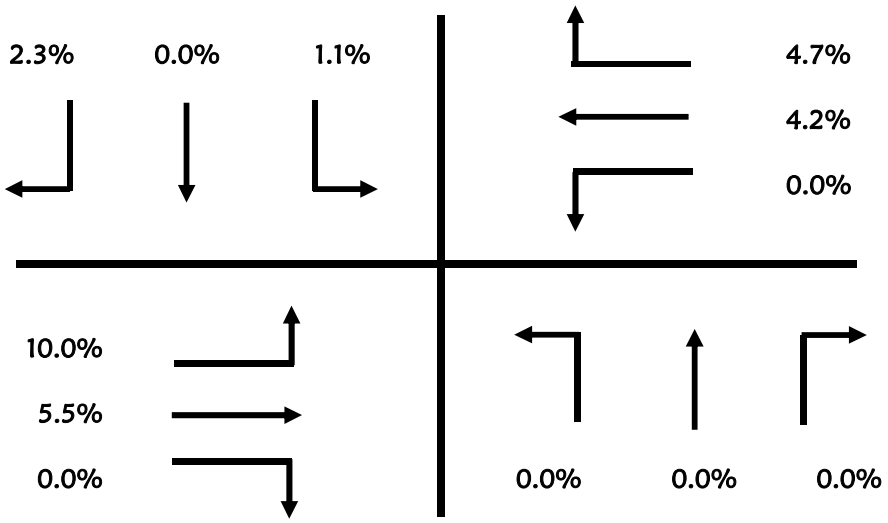

Roadway Count Summary

Vanasse Hangen Brustlin, Inc.

County	Flagler	**City**	Palm Coast
Intersection	Belle Terre Blvd	&	US1
Date	September 1, 2015		
Time Period	7:00 to 9:00		**U-Turn & RTOR**

VHB Project #: 62393

Time Period	Northbound Left	Northbound Through	Northbound Right	Southbound Left	Southbound Through	Southbound Right
7:00 - 7:15	0	0	0	0	0	3
7:15 - 7:30	0	0	0	0	0	9
7:30 - 7:45	0	0	0	0	0	4
7:45 - 8:00	0	0	0	0	0	7
8:00 - 8:15	0	0	0	0	0	6
8:15 - 8:30	0	0	0	0	0	5
8:30 - 8:45	0	0	0	0	0	4
8:45 - 9:00	0	0	0	0	0	0

Time Period	Eastbound Left	Eastbound Through	Eastbound Right	Westbound Left	Westbound Through	Westbound Right
7:00 - 7:15	0	0	0	0	0	2
7:15 - 7:30	0	0	0	0	0	4
7:30 - 7:45	0	0	0	0	0	2
7:45 - 8:00	0	0	0	0	0	2
8:00 - 8:15	0	0	0	0	0	7
8:15 - 8:30	0	0	0	0	0	1
8:30 - 8:45	0	0	0	0	0	0
8:45 - 9:00	0	0	0	0	0	6

North / South
Belle Terre Blvd

East / West
US1

Peak Hour
7:30 - 8:30

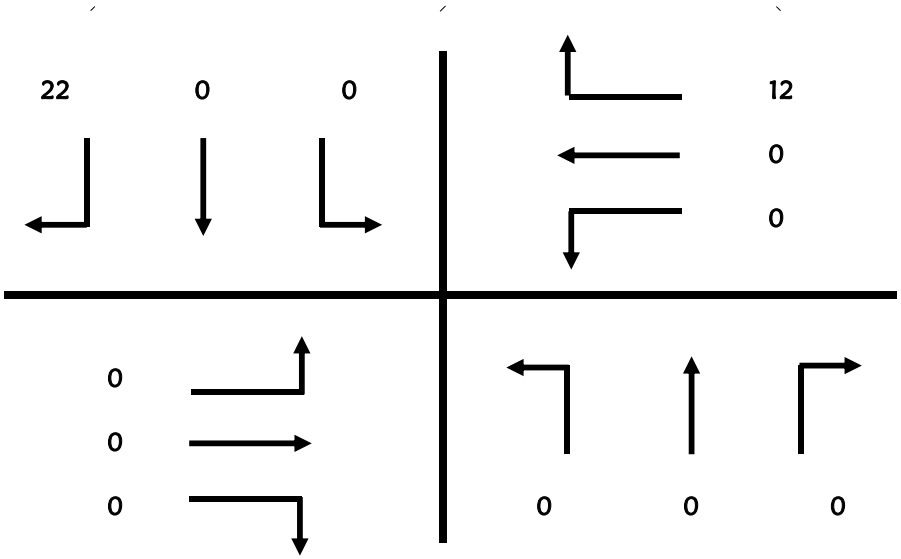

Roadway Count Summary

Vanasse Hangen Brustlin, Inc.

County	Flagler	**City**	Palm Coast
Intersection	Belle Terre Blvd	&	US 1
Date	September 1, 2015		**All Vehicles**
Time Period	16:00 to 18:00		

VHB Project #: 62393

Time Period	Northbound Left	Northbound Through	Northbound Right	Southbound Left	Southbound Through	Southbound Right
16:00 - 16:15	0	0	0	18	0	4
16:15 - 16:30	0	0	0	20	0	4
16:30 - 16:45	0	0	0	19	0	4
16:45 - 17:00	0	0	0	17	0	5
17:00 - 17:15	0	0	0	15	0	4
17:15 - 17:30	0	0	0	17	0	7
17:30 - 17:45	0	0	0	19	0	3
17:45 - 18:00	0	0	0	18	0	4
	0	0	0	143	0	35

Time Period	Eastbound Left	Eastbound Through	Eastbound Right	Westbound Left	Westbound Through	Westbound Right
16:00 - 16:15	7	85	0	0	116	33
16:15 - 16:30	8	96	0	0	115	36
16:30 - 16:45	4	98	0	0	125	37
16:45 - 17:00	9	102	0	0	124	47
17:00 - 17:15	7	92	0	0	95	34
17:15 - 17:30	9	120	0	0	159	49
17:30 - 17:45	9	95	0	0	136	49
17:45 - 18:00	8	80	0	0	108	44
	61	768	0	0	978	329

North / South
Belle Terre Blvd

East / West
US 1

Peak Hour
16:45 - 17:45

Peak Hour Factor
0.85

Total Pk Hr Voume
1,223

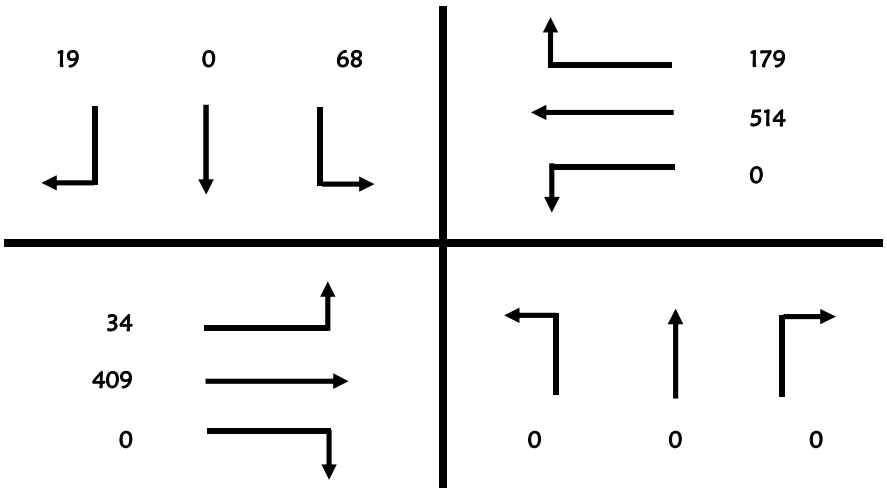

Roadway Count Summary

Vanasse Hangen Brustlin, Inc.

County	Flagler	**City**	Palm Coast
Intersection	Belle Terre Blvd	&	US 1
Date	September 1, 2015		
Time Period	16:00 to 18:00		**Trucks**

VHB Project #: 62393

Time Period	Northbound			Southbound		
	Left	Through	Right	Left	Through	Right
16:00 - 16:15	0	0	0	1	0	0
16:15 - 16:30	0	0	0	1	0	0
16:30 - 16:45	0	0	0	0	0	0
16:45 - 17:00	0	0	0	2	0	0
17:00 - 17:15	0	0	0	0	0	0
17:15 - 17:30	0	0	0	0	0	1
17:30 - 17:45	0	0	0	0	0	0
17:45 - 18:00	0	0	0	0	0	1

Time Period	Eastbound			Westbound		
	Left	Through	Right	Left	Through	Right
16:00 - 16:15	0	6	0	0	9	0
16:15 - 16:30	0	0	0	0	5	0
16:30 - 16:45	0	4	0	0	13	0
16:45 - 17:00	0	3	0	0	4	0
17:00 - 17:15	0	1	0	0	3	0
17:15 - 17:30	0	2	0	0	2	0
17:30 - 17:45	0	1	0	0	1	0
17:45 - 18:00	0	0	0	0	2	0

North / South
Belle Terre Blvd

East / West
US 1

Peak Hour
16:45 - 17:45

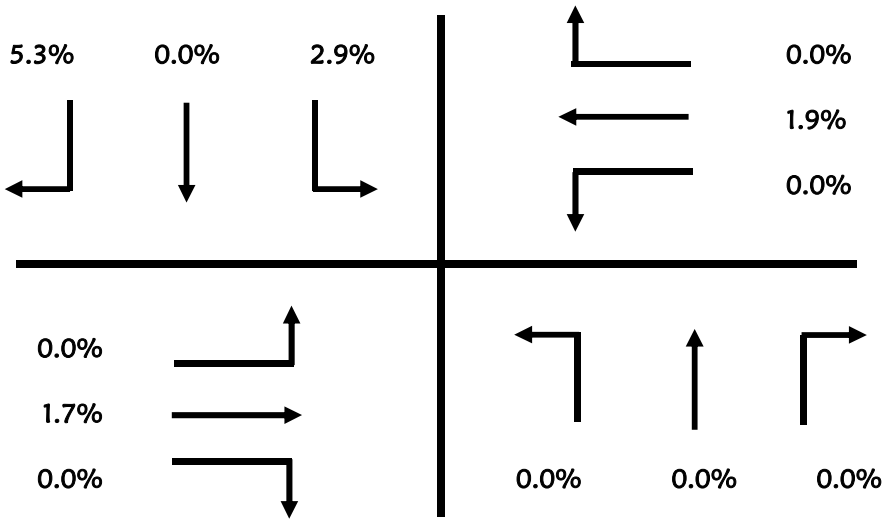

Roadway Count Summary

Vanasse Hangen Brustlin, Inc.

County	Flagler	**City**	Palm Coast
Intersection	Belle Terre Blvd	&	US 1
Date	September 1, 2015		
Time Period	16:00 to 18:00		**U-Turn & RTOR**

VHB Project #: 62393

Time Period	Northbound Left	Northbound Through	Northbound Right	Southbound Left	Southbound Through	Southbound Right
16:00 - 16:15	0	0	0	0	0	4
16:15 - 16:30	0	0	0	0	0	3
16:30 - 16:45	0	0	0	0	0	3
16:45 - 17:00	0	0	0	0	0	5
17:00 - 17:15	0	0	0	0	0	3
17:15 - 17:30	0	0	0	0	0	3
17:30 - 17:45	0	0	0	0	0	2
17:45 - 18:00	0	0	0	0	0	1

Time Period	Eastbound Left	Eastbound Through	Eastbound Right	Westbound Left	Westbound Through	Westbound Right
16:00 - 16:15	0	0	0	0	0	5
16:15 - 16:30	0	0	0	0	0	4
16:30 - 16:45	0	0	0	0	0	9
16:45 - 17:00	0	0	0	0	0	6
17:00 - 17:15	1	0	0	0	0	8
17:15 - 17:30	0	0	0	0	0	5
17:30 - 17:45	0	0	0	0	0	7
17:45 - 18:00	0	0	0	0	0	4

North / South
Belle Terre Blvd

East / West
US 1

Peak Hour
16:45 - 17:45

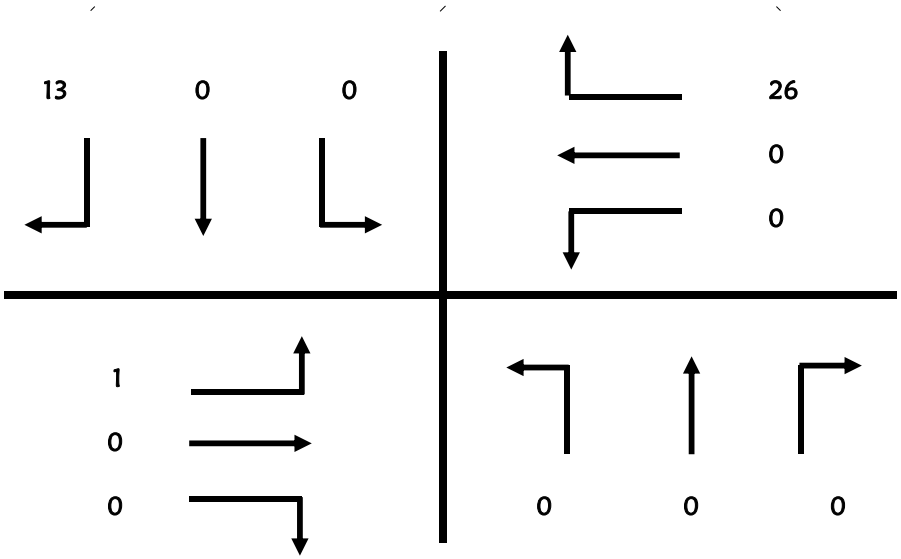

Pedestrian & Bicycle Summary

Project #: 62393 **NB/SB:** Belle Terre Blvd

Date: 9/1/2015 **EB/WB:** US 1

Hour

		7:00 (1)	8:00 (2)	(3)	16:00 (4)	17:00 (5)	(6)	(7)	(8)	
Eastbound ▶	Bike	0	0		0	0				0
	Ped	0	0		0	0				0
Westbound ◀	Bike	0	0		0	1				1
	Ped	0	0		0	0				0

Hour	Southbound Ped ▼	Southbound Bike ▼	Northbound Ped ▲	Northbound Bike ▲
1 7:00	0	0	0	0
2 8:00	0	0	0	0
3				
4 16:00	0	0	0	0
5 17:00	0	0	0	0
6				
7				
8				
	0	0	0	0

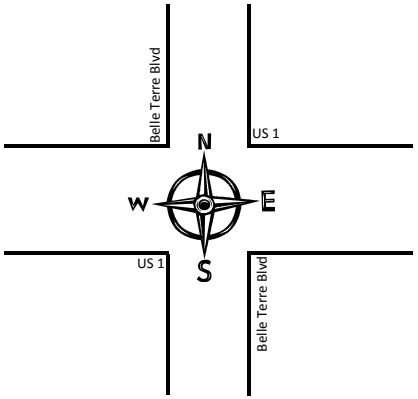

Southbound Ped ▼	Southbound Bike ▼	Northbound Ped ▲	Northbound Bike ▲	Hour
0	0	0	0	1 7:00
0	0	0	0	2 8:00
				3
0	0	0	0	4 16:00
0	0	0	0	5 17:00
				6
				7
				8
0	0	0	0	

		7:00 (1)	8:00 (2)	(3)	16:00 (4)	17:00 (5)	(6)	(7)	(8)	
Eastbound ▶	Bike	0	0		0	0				0
	Ped	0	0		0	0				0
Westbound ◀	Bike	0	0		0	0				0
	Ped	0	0		0	0				0

Hour

Roadway Count Summary

Vanasse Hangen Brustlin, Inc.

County	Flagler	**City**	Palm Coast
Intersection	Belle Terre Blvd	&	Kaywood Pl - Kankakee Trail
Date	September 1, 2015		**All Vehicles**
Time Period	7:00 to 9:00		

VHB Project #: 62393

Time Period	Northbound Left	Northbound Through	Northbound Right	Southbound Left	Southbound Through	Southbound Right
7:00 - 7:15	0	9	0	0	55	2
7:15 - 7:30	0	15	0	1	52	3
7:30 - 7:45	0	16	0	0	70	0
7:45 - 8:00	1	15	0	1	51	5
8:00 - 8:15	1	21	1	1	40	5
8:15 - 8:30	1	22	0	0	37	8
8:30 - 8:45	2	17	0	0	40	5
8:45 - 9:00	2	20	0	0	37	3
	7	135	1	3	382	31

Time Period	Eastbound Left	Eastbound Through	Eastbound Right	Westbound Left	Westbound Through	Westbound Right
7:00 - 7:15	7	0	4	1	0	2
7:15 - 7:30	6	0	3	2	0	1
7:30 - 7:45	10	0	2	1	0	0
7:45 - 8:00	9	0	5	0	0	0
8:00 - 8:15	3	0	8	1	0	1
8:15 - 8:30	7	0	6	1	1	0
8:30 - 8:45	4	0	2	0	0	0
8:45 - 9:00	5	0	2	0	0	1
	51	0	32	6	1	5

North / South
Belle Terre Blvd

East / West
Kaywood Pl - Kankakee Trail

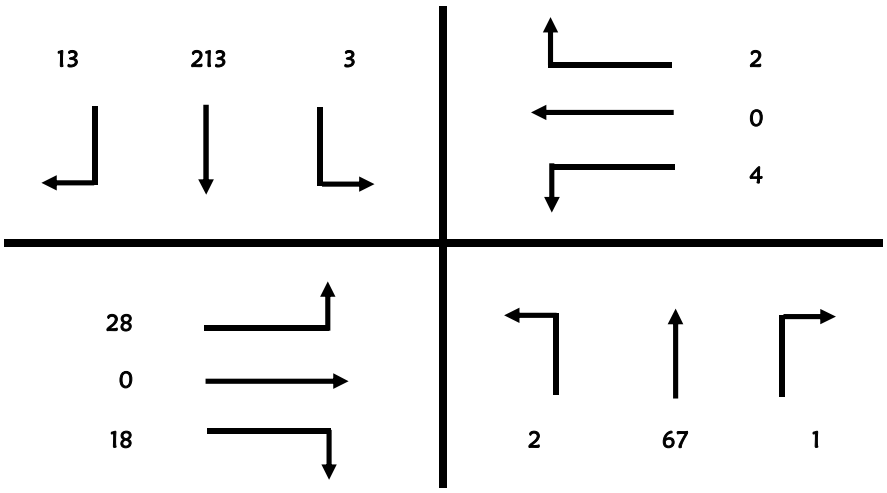

Peak Hour
7:15 - 8:15

Peak Hour Factor
0.89

Total Pk Hr Voume
351

Roadway Count Summary

Vanasse Hangen Brustlin, Inc.

County	Flagler	**City**	Palm Coast
Intersection	Belle Terre Blvd	&	Kaywood Pl - Kankakee Trail
Date	September 1, 2015		
Time Period	7:00 to 9:00		**Trucks**

VHB Project #: 62393

Time Period	Northbound			Southbound		
	Left	Through	Right	Left	Through	Right
7:00 - 7:15	0	2	0	0	2	0
7:15 - 7:30	0	3	0	0	0	0
7:30 - 7:45	0	1	0	0	0	0
7:45 - 8:00	0	0	0	0	2	0
8:00 - 8:15	0	1	0	0	0	1
8:15 - 8:30	0	0	0	0	1	2
8:30 - 8:45	0	0	0	0	1	0
8:45 - 9:00	0	0	0	0	0	0

Time Period	Eastbound			Westbound		
	Left	Through	Right	Left	Through	Right
7:00 - 7:15	0	0	0	0	0	0
7:15 - 7:30	1	0	0	0	0	0
7:30 - 7:45	0	0	0	0	0	0
7:45 - 8:00	0	0	0	0	0	0
8:00 - 8:15	1	0	0	0	0	0
8:15 - 8:30	1	0	0	0	0	0
8:30 - 8:45	0	0	0	0	0	0
8:45 - 9:00	0	0	0	0	0	0

North / South
Belle Terre Blvd

East / West
Kaywood Pl - Kankakee Trail

Peak Hour
7:15 - 8:15

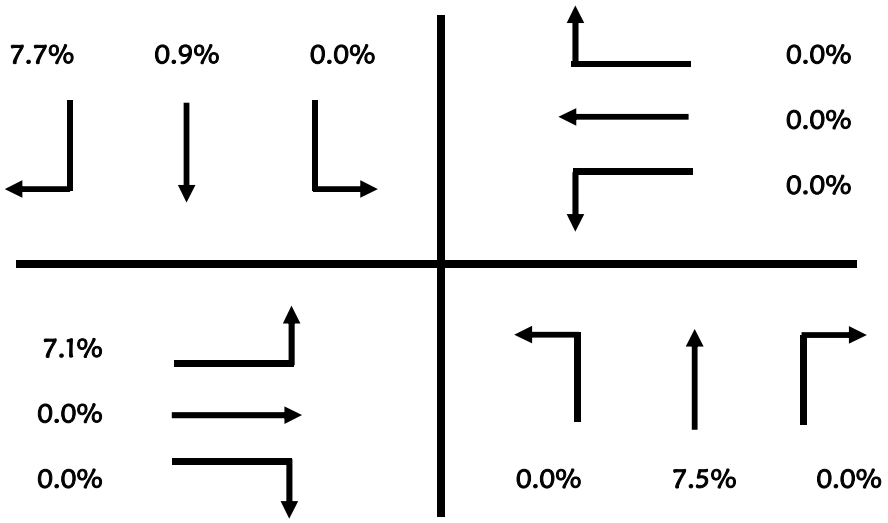

Roadway Count Summary

Vanasse Hangen Brustlin, Inc.

County	Flagler	**City**	Palm Coast
Intersection	Belle Terre Blvd	&	Kaywood Pl - Kankakee Trail
Date	September 1, 2015		
Time Period	7:00 to 9:00		**U-Turn & RTOR**

VHB Project #: 62393

Time Period	Northbound			Southbound		
	Left	Through	Right	Left	Through	Right
7:00 - 7:15	0	0	0	0	0	0
7:15 - 7:30	0	0	0	0	0	0
7:30 - 7:45	0	0	0	0	0	0
7:45 - 8:00	0	0	0	0	0	0
8:00 - 8:15	0	0	0	0	0	0
8:15 - 8:30	0	0	0	0	0	0
8:30 - 8:45	0	0	0	0	0	0
8:45 - 9:00	0	0	0	0	0	0

Time Period	Eastbound			Westbound		
	Left	Through	Right	Left	Through	Right
7:00 - 7:15	0	0	0	0	0	0
7:15 - 7:30	0	0	0	0	0	0
7:30 - 7:45	0	0	0	0	0	0
7:45 - 8:00	0	0	0	0	0	0
8:00 - 8:15	0	0	0	0	0	0
8:15 - 8:30	0	0	0	0	0	0
8:30 - 8:45	0	0	0	0	0	0
8:45 - 9:00	0	0	0	0	0	0

North / South
Belle Terre Blvd

East / West
Kaywood Pl - Kankakee Trail

Peak Hour
7:15 - 8:15

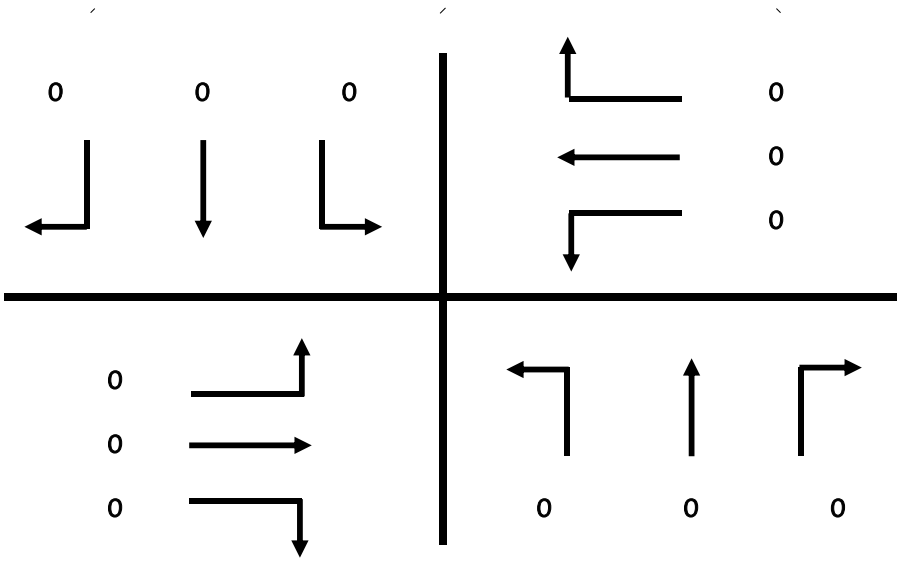

Roadway Count Summary

Vanasse Hangen Brustlin, Inc.

County	Flagler	**City**	Palm Coast
Intersection	Belle Terre Blvd	&	Kaywood Pl - Kankakee Trail
Date	September 1, 2015		**All Vehicles**
Time Period	16:00 to 18:00		

VHB Project #: 62393

Time Period	Northbound Left	Northbound Through	Northbound Right	Southbound Left	Southbound Through	Southbound Right
16:00 - 16:15	7	34	0	0	18	8
16:15 - 16:30	5	39	1	2	19	8
16:30 - 16:45	1	41	0	0	29	9
16:45 - 17:00	6	47	0	1	14	6
17:00 - 17:15	2	39	0	2	19	9
17:15 - 17:30	6	50	2	0	24	7
17:30 - 17:45	5	47	2	0	20	2
17:45 - 18:00	3	45	2	0	20	12
	35	342	7	5	163	61

Time Period	Eastbound Left	Eastbound Through	Eastbound Right	Westbound Left	Westbound Through	Westbound Right
16:00 - 16:15	8	1	4	2	0	0
16:15 - 16:30	6	0	2	1	0	0
16:30 - 16:45	3	0	1	0	0	3
16:45 - 17:00	6	0	2	0	0	0
17:00 - 17:15	2	0	0	1	0	0
17:15 - 17:30	3	0	2	0	0	0
17:30 - 17:45	9	0	1	1	0	0
17:45 - 18:00	5	0	0	0	0	2
	42	1	12	5	0	5

North / South
Belle Terre Blvd

East / West
Kaywood Pl - Kankakee Trail

Peak Hour
17:00 - 18:00

Peak Hour Factor
0.92

Total Pk Hr Voume
344

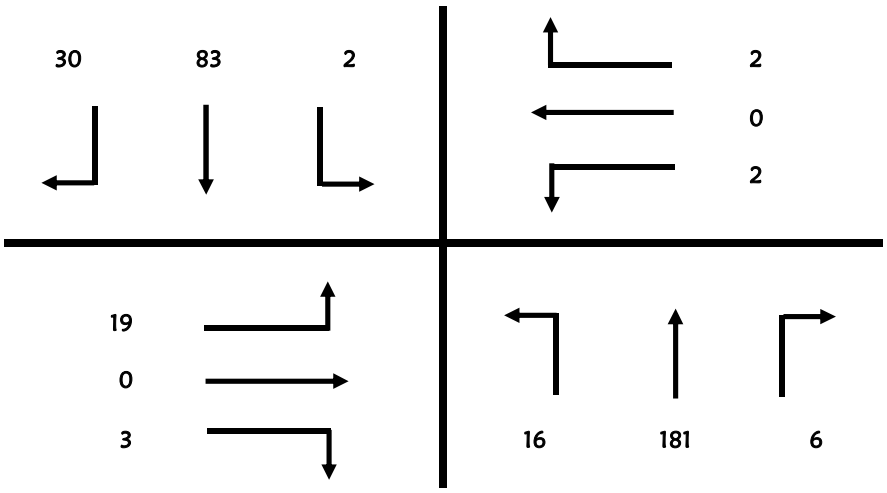

Roadway Count Summary

Vanasse Hangen Brustlin, Inc.

County	Flagler	**City**	Palm Coast
Intersection	Belle Terre Blvd	&	Kaywood Pl - Kankakee Trail
Date	September 1, 2015		
Time Period	16:00 to 18:00		**Trucks**

VHB Project #: 62393

Time Period	Northbound			Southbound		
	Left	Through	Right	Left	Through	Right
16:00 - 16:15	0	0	0	0	0	0
16:15 - 16:30	0	0	0	0	1	0
16:30 - 16:45	0	0	0	0	1	0
16:45 - 17:00	0	0	0	0	0	0
17:00 - 17:15	0	0	0	0	0	0
17:15 - 17:30	0	0	0	0	0	0
17:30 - 17:45	0	0	0	0	1	0
17:45 - 18:00	0	0	0	0	0	0

Time Period	Eastbound			Westbound		
	Left	Through	Right	Left	Through	Right
16:00 - 16:15	1	0	0	0	0	0
16:15 - 16:30	0	0	0	0	0	0
16:30 - 16:45	0	0	0	0	0	0
16:45 - 17:00	0	0	0	0	0	0
17:00 - 17:15	0	0	0	0	0	0
17:15 - 17:30	0	0	0	0	0	0
17:30 - 17:45	0	0	0	0	0	0
17:45 - 18:00	0	0	0	0	0	0

North / South
Belle Terre Blvd

East / West
Kaywood Pl - Kankakee Trail

Peak Hour
17:00 - 18:00

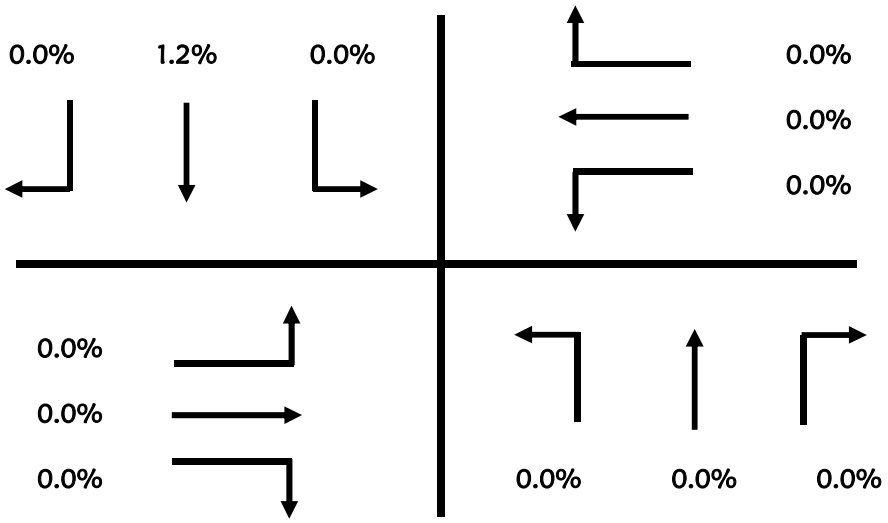

Roadway Count Summary

Vanasse Hangen Brustlin, Inc.

County	Flagler	**City**	Palm Coast
Intersection	Belle Terre Blvd	&	Kaywood Pl - Kankakee Trail
Date	September 1, 2015		
Time Period	16:00 to 18:00		**U-Turn & RTOR**

VHB Project #: 62393

Time Period	Northbound			Southbound		
	Left	Through	Right	Left	Through	Right
16:00 - 16:15	0	0	0	0	0	0
16:15 - 16:30	0	0	0	0	0	0
16:30 - 16:45	0	0	0	0	0	0
16:45 - 17:00	0	0	0	0	0	0
17:00 - 17:15	0	0	0	0	0	0
17:15 - 17:30	0	0	0	0	0	0
17:30 - 17:45	0	0	0	0	0	0
17:45 - 18:00	0	0	0	0	0	0

Time Period	Eastbound			Westbound		
	Left	Through	Right	Left	Through	Right
16:00 - 16:15	0	0	0	0	0	0
16:15 - 16:30	0	0	0	0	0	0
16:30 - 16:45	0	0	0	0	0	0
16:45 - 17:00	0	0	0	0	0	0
17:00 - 17:15	0	0	0	0	0	0
17:15 - 17:30	0	0	0	0	0	0
17:30 - 17:45	0	0	0	0	0	0
17:45 - 18:00	0	0	0	0	0	0

North / South
Belle Terre Blvd

East / West
Kaywood Pl - Kankakee Trail

Peak Hour
17:00 - 18:00

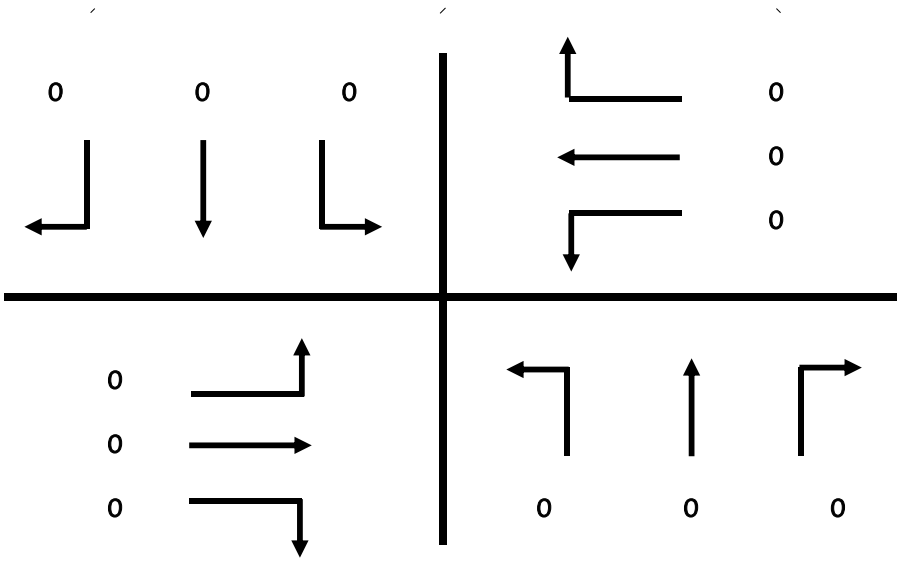

Pedestrian & Bicycle Summary

Project #: 62393
Date: 9/1/2015

NB/SB: Belle Terre Blvd
EB/WB: Kaywood Pl - Kankakee Trail

Hour

		7:00	8:00		16:00	17:00				
		1	2	3	4	5	6	7	8	
Eastbound ▶	Bike	0	0		0	0				0
	Ped	0	0		0	0				0
Westbound ◀	Bike	0	0		0	0				0
	Ped	0	0		0	0				0

Hour	Southbound Ped ▼	Southbound Bike ▼	Northbound Ped ▲	Northbound Bike ▲
1 7:00	0	0	0	0
2 8:00	0	0	0	0
3				
4 16:00	0	0	0	0
5 17:00	0	0	0	0
6				
7				
8				
	0	0	0	0

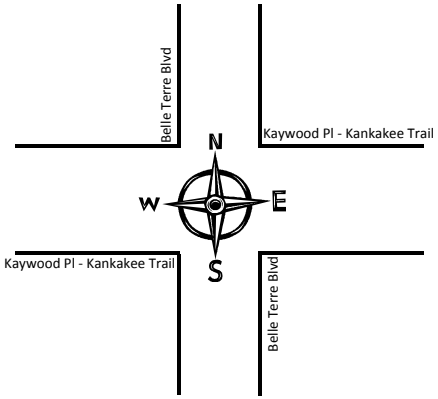

Hour	Southbound Ped ▼	Southbound Bike ▼	Northbound Ped ▲	Northbound Bike ▲	Hour
1	0	0	2	0	1 7:00
2	2	0	0	0	2 8:00
3					3
4	0	0	0	0	4 16:00
5	0	0	0	0	5 17:00
6					6
7					7
8					8
	2	0	2	0	

		7:00	8:00		16:00	17:00				
		1	2	3	4	5	6	7	8	
Eastbound ▶	Bike	0	1		0	0				1
	Ped	0	0		0	0				0
Westbound ◀	Bike	0	0		0	0				0
	Ped	0	0		0	0				0

Hour

Roadway Count Summary

Vanasse Hangen Brustlin, Inc.

County	Flagler	**City**	Palm Coast
Intersection	Belle Terre Blvd	&	Kathleen Tr (S)
Date	September 1, 2015		**All Vehicles**
Time Period	7:00 to 9:00		

VHB Project #: 62393

Time Period	Northbound Left	Northbound Through	Northbound Right	Southbound Left	Southbound Through	Southbound Right
7:00 - 7:15	0	11	0	0	56	0
7:15 - 7:30	0	27	0	0	52	0
7:30 - 7:45	0	27	0	1	68	0
7:45 - 8:00	0	24	0	0	53	0
8:00 - 8:15	0	29	1	0	49	0
8:15 - 8:30	0	24	0	3	46	0
8:30 - 8:45	0	21	3	1	38	0
8:45 - 9:00	0	30	0	1	43	0
	0	193	4	6	405	0

Time Period	Eastbound Left	Eastbound Through	Eastbound Right	Westbound Left	Westbound Through	Westbound Right
7:00 - 7:15	0	0	0	1	0	1
7:15 - 7:30	0	0	0	3	0	3
7:30 - 7:45	0	0	0	1	0	3
7:45 - 8:00	0	0	0	3	0	3
8:00 - 8:15	0	0	0	2	0	1
8:15 - 8:30	0	0	0	2	0	1
8:30 - 8:45	0	0	0	1	0	1
8:45 - 9:00	0	0	0	1	0	1
	0	0	0	14	0	14

North / South
Belle Terre Blvd

East / West
Kathleen Tr (S)

Peak Hour
7:15 - 8:15

Peak Hour Factor
0.88

Total Pk Hr Voume
350

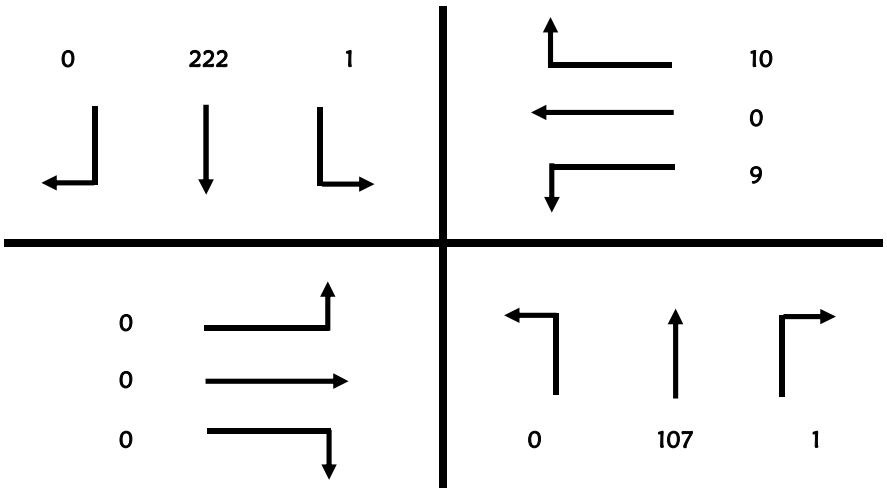

Roadway Count Summary

Vanasse Hangen Brustlin, Inc.

County	Flagler	**City**	Palm Coast
Intersection	Belle Terre Blvd	&	Kathleen Tr (S)
Date	September 1, 2015		
Time Period	7:00 to 9:00		**Trucks**

VHB Project #: 62393

Time Period	Northbound			Southbound		
	Left	Through	Right	Left	Through	Right
7:00 - 7:15	0	0	0	0	1	0
7:15 - 7:30	0	6	0	0	1	0
7:30 - 7:45	0	3	0	0	0	0
7:45 - 8:00	0	0	0	0	1	0
8:00 - 8:15	0	1	0	0	3	0
8:15 - 8:30	0	2	0	0	3	0
8:30 - 8:45	0	1	1	0	0	0
8:45 - 9:00	0	1	0	0	1	0

Time Period	Eastbound			Westbound		
	Left	Through	Right	Left	Through	Right
7:00 - 7:15	0	0	0	1	0	0
7:15 - 7:30	0	0	0	0	0	0
7:30 - 7:45	0	0	0	0	0	0
7:45 - 8:00	0	0	0	0	0	0
8:00 - 8:15	0	0	0	0	0	0
8:15 - 8:30	0	0	0	0	0	0
8:30 - 8:45	0	0	0	0	0	0
8:45 - 9:00	0	0	0	0	0	0

North / South
Belle Terre Blvd

East / West
Kathleen Tr (S)

Peak Hour
7:15 - 8:15

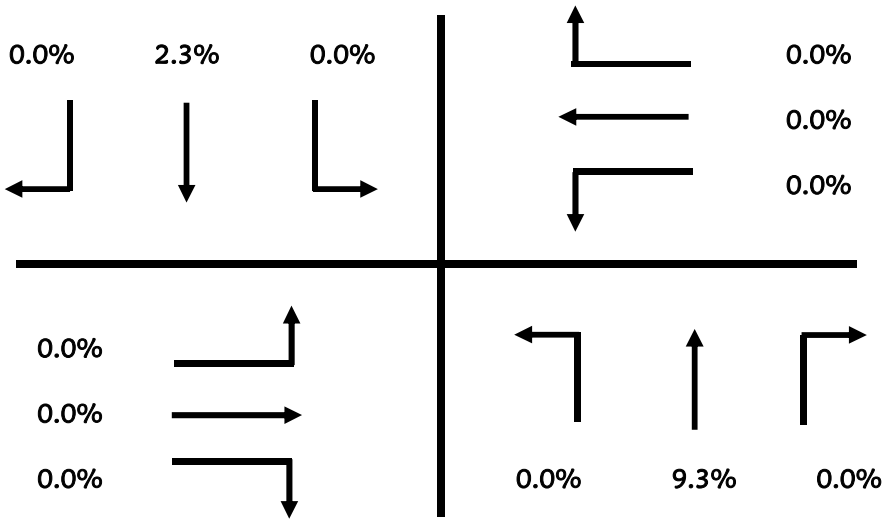

Roadway Count Summary

Vanasse Hangen Brustlin, Inc.

County	Flagler	**City**	Palm Coast
Intersection	Belle Terre Blvd	&	Kathleen Tr (S)
Date	September 1, 2015		
Time Period	7:00 to 9:00		**U-Turn & RTOR**

VHB Project #: 62393

Time Period	Northbound Left	Northbound Through	Northbound Right	Southbound Left	Southbound Through	Southbound Right
7:00 - 7:15	0	0	0	0	0	0
7:15 - 7:30	0	0	0	0	0	0
7:30 - 7:45	0	0	0	0	0	0
7:45 - 8:00	0	0	0	0	0	0
8:00 - 8:15	0	0	0	0	0	0
8:15 - 8:30	0	0	0	0	0	0
8:30 - 8:45	0	0	0	0	0	0
8:45 - 9:00	0	0	0	0	0	0

Time Period	Eastbound Left	Eastbound Through	Eastbound Right	Westbound Left	Westbound Through	Westbound Right
7:00 - 7:15	0	0	0	0	0	0
7:15 - 7:30	0	0	0	0	0	0
7:30 - 7:45	0	0	0	0	0	0
7:45 - 8:00	0	0	0	0	0	0
8:00 - 8:15	0	0	0	0	0	0
8:15 - 8:30	0	0	0	1	0	0
8:30 - 8:45	0	0	0	0	0	0
8:45 - 9:00	0	0	0	0	0	0

North / South
Belle Terre Blvd

East / West
Kathleen Tr (S)

Peak Hour
7:15 - 8:15

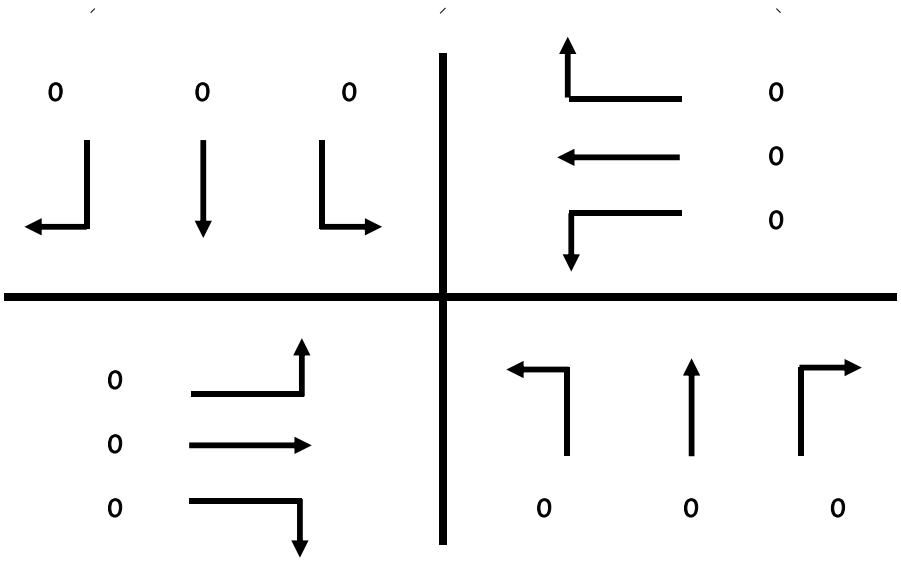

Roadway Count Summary

Vanasse Hangen Brustlin, Inc.

County	Flagler	**City**	Palm Coast
Intersection	Belle Terre Blvd	&	Kathleen Trail (S)
Date	September 1, 2015		**All Vehicles**
Time Period	16:00 to 18:00		

VHB Project #: 62393

Time Period	Northbound Left	Northbound Through	Northbound Right	Southbound Left	Southbound Through	Southbound Right
16:00 - 16:15	0	39	1	2	25	0
16:15 - 16:30	0	44	2	0	31	0
16:30 - 16:45	0	49	0	1	33	0
16:45 - 17:00	0	54	0	1	25	0
17:00 - 17:15	0	39	1	1	23	0
17:15 - 17:30	0	54	2	1	32	0
17:30 - 17:45	0	61	2	1	23	0
17:45 - 18:00	0	47	1	1	35	0
	0	387	9	8	227	0

Time Period	Eastbound Left	Eastbound Through	Eastbound Right	Westbound Left	Westbound Through	Westbound Right
16:00 - 16:15	0	0	0	0	0	0
16:15 - 16:30	0	0	0	2	0	0
16:30 - 16:45	0	0	0	0	0	0
16:45 - 17:00	0	0	0	1	0	0
17:00 - 17:15	0	0	0	3	0	1
17:15 - 17:30	0	0	0	0	0	1
17:30 - 17:45	0	0	0	0	0	0
17:45 - 18:00	0	0	0	0	0	0
	0	0	0	6	0	2

North / South
Belle Terre Blvd

East / West
Kathleen Trail (S)

Peak Hour
17:00 - 18:00

Peak Hour Factor
0.91

Total Pk Hr Voume
329

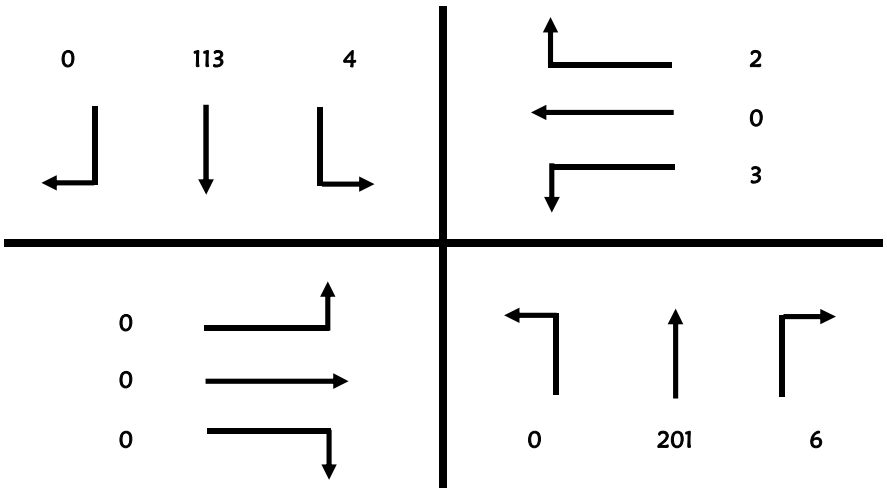

Roadway Count Summary

Vanasse Hangen Brustlin, Inc.

County	Flagler	**City**	Palm Coast
Intersection	Belle Terre Blvd	&	Kathleen Trail (S)
Date	September 1, 2015		
Time Period	16:00 to 18:00		**Trucks**

VHB Project #: 62393

Time Period	Northbound			Southbound		
	Left	Through	Right	Left	Through	Right
16:00 - 16:15	0	1	0	0	0	0
16:15 - 16:30	0	0	0	0	1	0
16:30 - 16:45	0	0	0	0	0	0
16:45 - 17:00	0	0	0	0	2	0
17:00 - 17:15	0	0	0	0	0	0
17:15 - 17:30	0	0	0	0	2	0
17:30 - 17:45	0	0	0	0	0	0
17:45 - 18:00	0	0	0	0	0	0

Time Period	Eastbound			Westbound		
	Left	Through	Right	Left	Through	Right
16:00 - 16:15	0	0	0	0	0	0
16:15 - 16:30	0	0	0	0	0	0
16:30 - 16:45	0	0	0	0	0	0
16:45 - 17:00	0	0	0	0	0	0
17:00 - 17:15	0	0	0	0	0	0
17:15 - 17:30	0	0	0	0	0	0
17:30 - 17:45	0	0	0	0	0	0
17:45 - 18:00	0	0	0	0	0	0

North / South
Belle Terre Blvd

East / West
Kathleen Trail (S)

Peak Hour
17:00 - 18:00

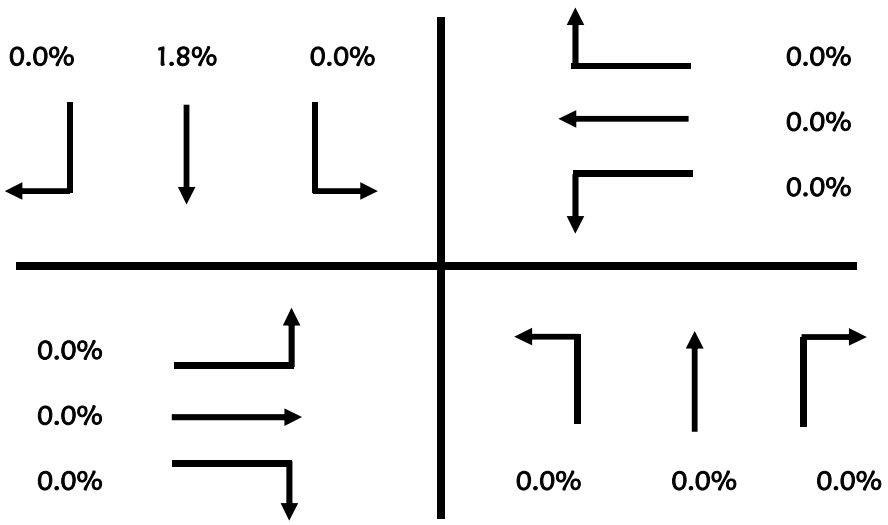

Roadway Count Summary

Vanasse Hangen Brustlin, Inc.

County	Flagler	**City**	Palm Coast
Intersection	Belle Terre Blvd	&	Kathleen Trail (S)
Date	September 1, 2015		
Time Period	16:00 to 18:00		**U-Turn & RTOR**

VHB Project #: 62393

Time Period	Northbound			Southbound		
	Left	Through	Right	Left	Through	Right
16:00 - 16:15	0	0	0	0	0	0
16:15 - 16:30	0	0	0	0	0	0
16:30 - 16:45	0	0	0	0	0	0
16:45 - 17:00	0	0	0	0	0	0
17:00 - 17:15	0	0	0	0	0	0
17:15 - 17:30	0	0	0	0	0	0
17:30 - 17:45	0	0	0	0	0	0
17:45 - 18:00	0	0	0	0	0	0

Time Period	Eastbound			Westbound		
	Left	Through	Right	Left	Through	Right
16:00 - 16:15	0	0	0	0	0	0
16:15 - 16:30	0	0	0	0	0	0
16:30 - 16:45	0	0	0	0	0	0
16:45 - 17:00	0	0	0	0	0	0
17:00 - 17:15	0	0	0	0	0	0
17:15 - 17:30	0	0	0	0	0	0
17:30 - 17:45	0	0	0	0	0	0
17:45 - 18:00	0	0	0	0	0	0

North / South
Belle Terre Blvd

East / West
Kathleen Trail (S)

Peak Hour
17:00 - 18:00

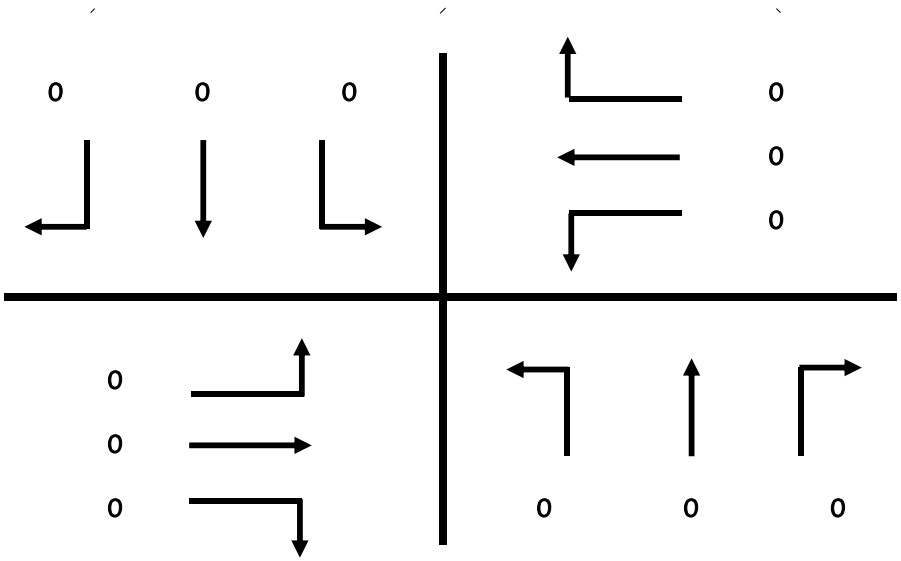

Pedestrian & Bicycle Summary

Project #: 62393 **NB/SB:** Belle Terre Blvd

Date: 9/1/2015 **EB/WB:** Kathleen Trail (S)

Hour

		7:00	8:00		16:00	17:00				
		1	2	3	4	5	6	7	8	
Eastbound ▶	Bike	0	0		0	0				0
	Ped	0	0		0	0				0
Westbound ◀	Bike	0	0		0	0				0
	Ped	0	0		0	0				0

Hour	Southbound Ped ▼	Southbound Bike ▼	Northbound Ped ▲	Northbound Bike ▲
1 7:00	0	0	0	0
2 8:00	0	0	0	0
3				
4 16:00	0	0	0	0
5 17:00	0	0	0	0
6				
7				
8				
	0	0	0	0

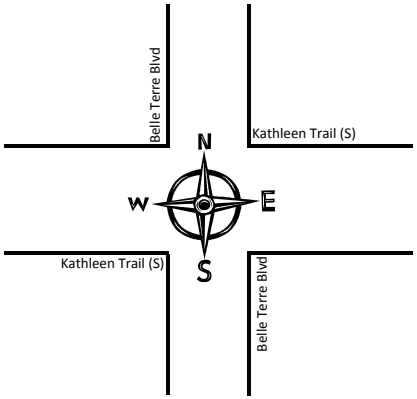

Southbound Ped ▼	Southbound Bike ▼	Northbound Ped ▲	Northbound Bike ▲	Hour
0	0	0	0	1 7:00
0	0	0	0	2 8:00
				3
0	0	0	0	4 16:00
0	0	0	0	5 17:00
				6
				7
				8
0	0	0	0	

		7:00	8:00		16:00	17:00				
		1	2	3	4	5	6	7	8	
Eastbound ▶	Bike	0	0		0	0				0
	Ped	0	0		0	0				0
Westbound ◀	Bike	0	0		0	0				0
	Ped	1	0		0	0				1

7:00 8:00 16:00 17:00

1 2 3 4 5 6 7 8

Hour

Roadway Count Summary

Vanasse Hangen Brustlin, Inc.

County	Flagler	**City**	Palm Coast
Intersection	Belle Terre Blvd	&	Kathleen Tr (N)
Date	September 1, 2015		**All Vehicles**
Time Period	7:00 to 9:00		

VHB Project #: 62393

Time Period	Northbound Left	Northbound Through	Northbound Right	Southbound Left	Southbound Through	Southbound Right
7:00 - 7:15	1	15	0	0	57	0
7:15 - 7:30	0	24	2	0	47	0
7:30 - 7:45	1	30	0	0	63	0
7:45 - 8:00	0	26	1	2	51	0
8:00 - 8:15	1	24	0	0	44	1
8:15 - 8:30	0	26	1	0	44	1
8:30 - 8:45	1	20	2	2	43	0
8:45 - 9:00	0	26	1	3	35	0
	4	191	7	7	384	2

Time Period	Eastbound Left	Eastbound Through	Eastbound Right	Westbound Left	Westbound Through	Westbound Right
7:00 - 7:15	1	0	0	1	0	3
7:15 - 7:30	0	0	1	3	0	3
7:30 - 7:45	2	0	1	2	0	2
7:45 - 8:00	2	0	1	3	0	0
8:00 - 8:15	0	1	2	2	0	0
8:15 - 8:30	2	0	1	0	0	1
8:30 - 8:45	1	0	2	0	0	0
8:45 - 9:00	0	0	2	3	0	2
	8	1	10	14	0	11

North / South
Belle Terre Blvd

East / West
Kathleen Tr (N)

Peak Hour
7:00 - 8:00

Peak Hour Factor
0.85

Total Pk Hr Voume
345

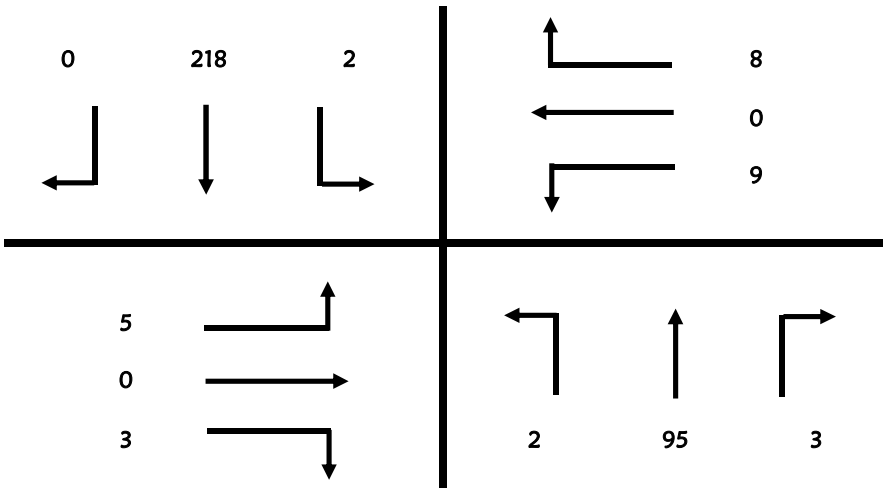

Roadway Count Summary

Vanasse Hangen Brustlin, Inc.

County	Flagler	**City**	Palm Coast
Intersection	Belle Terre Blvd	&	Kathleen Tr (N)
Date	September 1, 2015		
Time Period	7:00 to 9:00		**Trucks**

VHB Project #: 62393

Time Period	Northbound			Southbound		
	Left	Through	Right	Left	Through	Right
7:00 - 7:15	0	2	0	0	1	0
7:15 - 7:30	0	3	0	0	0	0
7:30 - 7:45	0	3	0	0	0	0
7:45 - 8:00	0	0	0	0	2	0
8:00 - 8:15	0	2	0	0	1	0
8:15 - 8:30	0	1	0	0	3	0
8:30 - 8:45	0	1	0	0	1	0
8:45 - 9:00	0	1	0	0	0	0

Time Period	Eastbound			Westbound		
	Left	Through	Right	Left	Through	Right
7:00 - 7:15	0	0	0	0	0	1
7:15 - 7:30	0	0	0	0	0	0
7:30 - 7:45	0	0	0	0	0	0
7:45 - 8:00	0	0	0	0	0	0
8:00 - 8:15	0	0	0	0	0	0
8:15 - 8:30	0	0	0	0	0	0
8:30 - 8:45	0	0	0	0	0	0
8:45 - 9:00	0	0	0	0	0	0

North / South
Belle Terre Blvd

East / West
Kathleen Tr (N)

Peak Hour
7:00 - 8:00

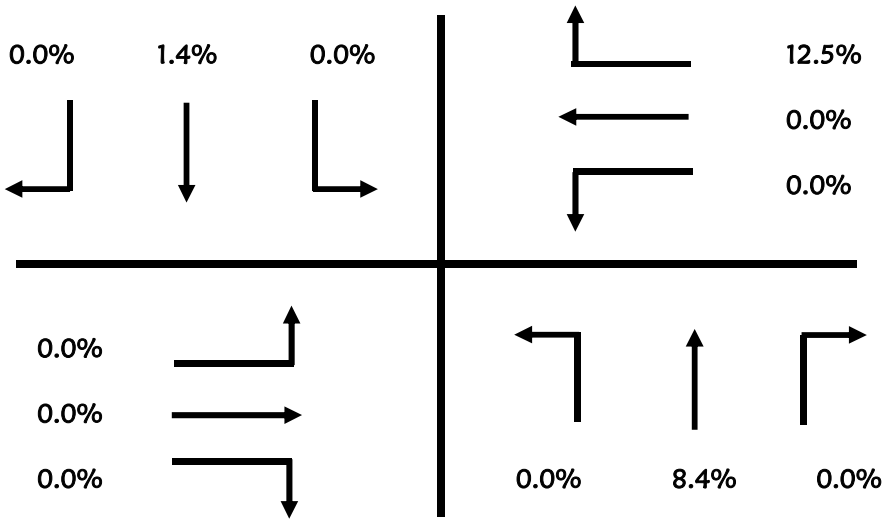

Roadway Count Summary

Vanasse Hangen Brustlin, Inc.

County	Flagler	**City**	Palm Coast
Intersection	Belle Terre Blvd	&	Kathleen Tr (N)
Date	September 1, 2015		
Time Period	7:00 to 9:00		**U-Turn & RTOR**

VHB Project #: 62393

Time Period	Northbound Left	Northbound Through	Northbound Right	Southbound Left	Southbound Through	Southbound Right
7:00 - 7:15	0	0	0	0	0	0
7:15 - 7:30	0	0	0	0	0	0
7:30 - 7:45	0	0	0	0	0	0
7:45 - 8:00	0	0	0	0	0	0
8:00 - 8:15	0	0	0	0	0	0
8:15 - 8:30	0	0	0	0	0	0
8:30 - 8:45	0	0	0	0	0	0
8:45 - 9:00	0	0	0	0	0	0

Time Period	Eastbound Left	Eastbound Through	Eastbound Right	Westbound Left	Westbound Through	Westbound Right
7:00 - 7:15	0	0	0	0	0	0
7:15 - 7:30	0	0	0	0	0	0
7:30 - 7:45	0	0	0	0	0	0
7:45 - 8:00	0	0	0	0	0	0
8:00 - 8:15	0	0	0	0	0	0
8:15 - 8:30	0	0	0	0	0	0
8:30 - 8:45	0	0	0	0	0	0
8:45 - 9:00	0	0	0	0	0	0

North / South
Belle Terre Blvd

East / West
Kathleen Tr (N)

Peak Hour
7:00 - 8:00

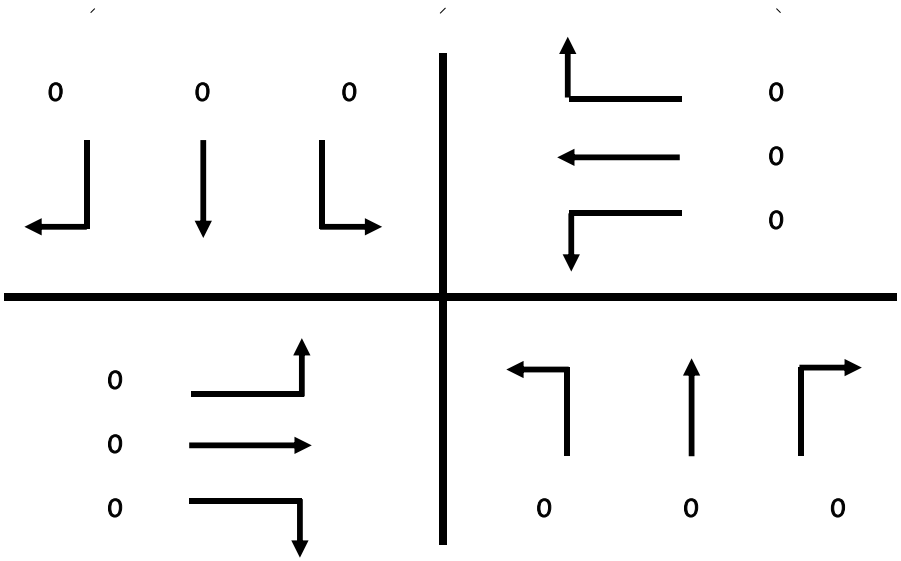

Roadway Count Summary

Vanasse Hangen Brustlin, Inc.

County	Flagler	**City**	Palm Coast
Intersection	Belle Terre Blvd	&	Kathleen Tr (N)
Date	September 1, 2015		**All Vehicles**
Time Period	16:00 to 18:00		

VHB Project #: 62393

Time Period	Northbound Left	Northbound Through	Northbound Right	Southbound Left	Southbound Through	Southbound Right
16:00 - 16:15	0	36	3	2	24	1
16:15 - 16:30	0	42	1	0	29	1
16:30 - 16:45	0	45	2	1	37	1
16:45 - 17:00	1	55	2	2	17	1
17:00 - 17:15	1	40	2	3	24	1
17:15 - 17:30	1	49	1	3	30	0
17:30 - 17:45	0	55	2	3	27	1
17:45 - 18:00	1	48	0	0	31	4
	4	370	13	14	219	10

Time Period	Eastbound Left	Eastbound Through	Eastbound Right	Westbound Left	Westbound Through	Westbound Right
16:00 - 16:15	0	1	0	2	0	2
16:15 - 16:30	2	0	0	0	1	0
16:30 - 16:45	2	0	1	1	0	0
16:45 - 17:00	1	0	1	2	0	3
17:00 - 17:15	2	0	0	1	0	2
17:15 - 17:30	0	0	1	1	0	0
17:30 - 17:45	0	0	0	0	0	1
17:45 - 18:00	0	0	1	1	0	1
	7	1	4	8	1	9

North / South
Belle Terre Blvd

East / West
Kathleen Tr (N)

Peak Hour
17:00 - 18:00

Peak Hour Factor
0.95

Total Pk Hr Voume
338

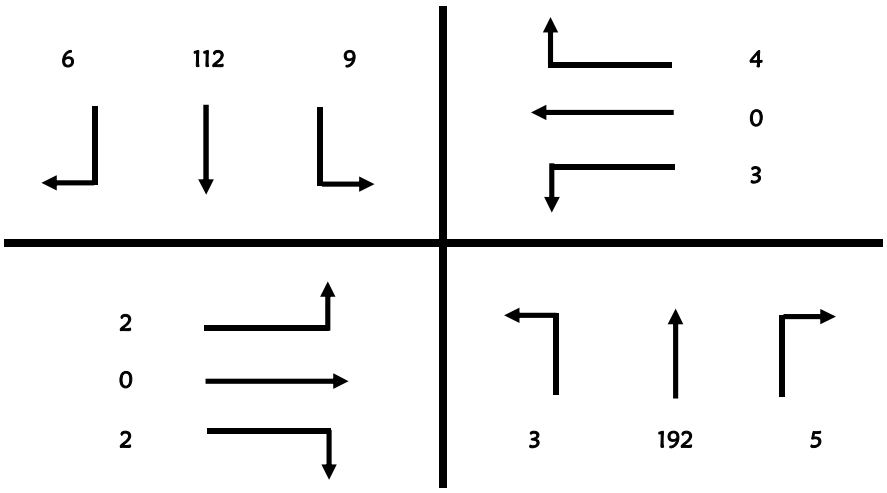

Roadway Count Summary

Vanasse Hangen Brustlin, Inc.

County	Flagler	**City**	Palm Coast
Intersection	Belle Terre Blvd	&	Kathleen Tr (N)
Date	September 1, 2015		
Time Period	16:00 to 18:00		**Trucks**

VHB Project #: 62393

Time Period	Northbound			Southbound		
	Left	Through	Right	Left	Through	Right
16:00 - 16:15	0	1	0	0	0	0
16:15 - 16:30	0	0	0	0	1	0
16:30 - 16:45	0	0	0	0	2	0
16:45 - 17:00	0	0	0	0	0	0
17:00 - 17:15	0	0	0	0	0	0
17:15 - 17:30	0	0	0	0	1	0
17:30 - 17:45	0	0	0	0	1	0
17:45 - 18:00	0	0	0	0	1	0

Time Period	Eastbound			Westbound		
	Left	Through	Right	Left	Through	Right
16:00 - 16:15	0	0	0	0	0	0
16:15 - 16:30	0	0	0	0	0	0
16:30 - 16:45	0	0	0	0	0	0
16:45 - 17:00	0	0	0	0	0	0
17:00 - 17:15	0	0	0	0	0	0
17:15 - 17:30	0	0	0	0	0	0
17:30 - 17:45	0	0	0	0	0	0
17:45 - 18:00	0	0	0	0	0	0

North / South
Belle Terre Blvd

East / West
Kathleen Tr (N)

Peak Hour
17:00 - 18:00

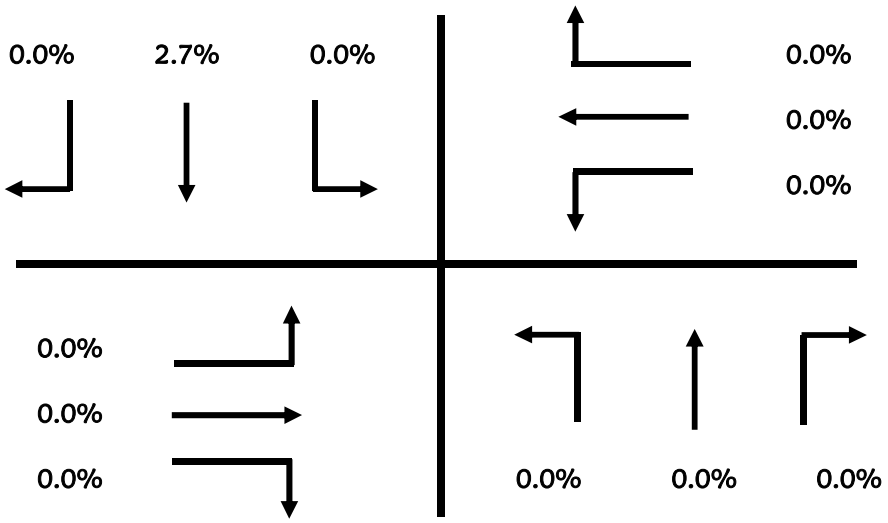

Roadway Count Summary

Vanasse Hangen Brustlin, Inc.

County	Flagler	**City**	Palm Coast
Intersection	Belle Terre Blvd	&	Kathleen Tr (N)
Date	September 1, 2015		
Time Period	16:00 to 18:00		**U-Turn & RTOR**

VHB Project #: 62393

Time Period	Northbound			Southbound		
	Left	Through	Right	Left	Through	Right
16:00 - 16:15	0	0	0	0	0	0
16:15 - 16:30	0	0	0	0	0	0
16:30 - 16:45	0	0	0	0	0	0
16:45 - 17:00	0	0	0	0	0	0
17:00 - 17:15	0	0	0	0	0	0
17:15 - 17:30	0	0	0	0	0	0
17:30 - 17:45	0	0	0	0	0	0
17:45 - 18:00	0	0	0	0	0	0

Time Period	Eastbound			Westbound		
	Left	Through	Right	Left	Through	Right
16:00 - 16:15	0	0	0	0	0	0
16:15 - 16:30	0	0	0	0	0	0
16:30 - 16:45	0	0	0	0	0	0
16:45 - 17:00	0	0	0	0	0	0
17:00 - 17:15	0	0	0	0	0	0
17:15 - 17:30	0	0	0	0	0	0
17:30 - 17:45	0	0	0	0	0	0
17:45 - 18:00	0	0	0	0	0	0

North / South
Belle Terre Blvd

East / West
Kathleen Tr (N)

Peak Hour
17:00 - 18:00

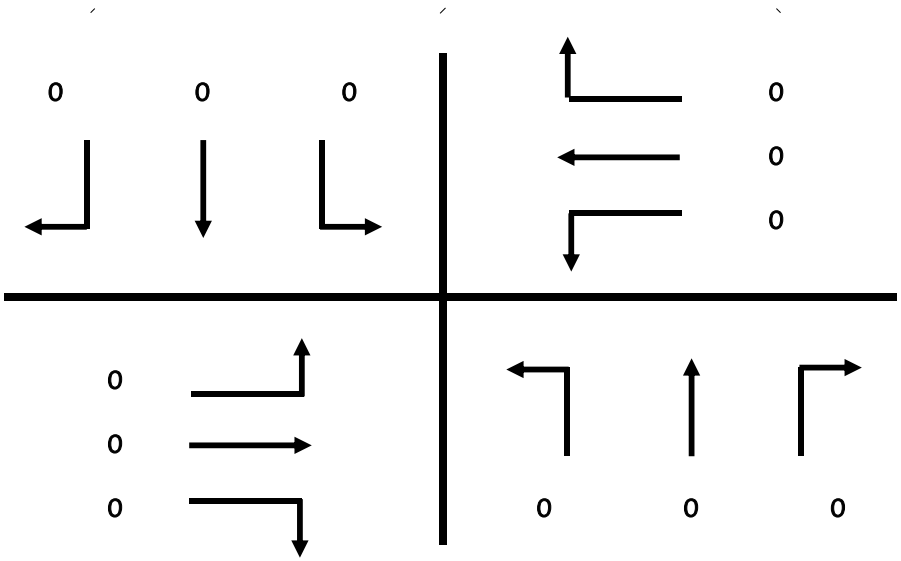

Pedestrian & Bicycle Summary

Project #: 62393 **NB/SB:** Belle Terre Blvd

Date: 9/1/2015 **EB/WB:** Kathleen Tr (N)

Hour

		7:00	8:00		16:00	17:00				
		1	2	3	4	5	6	7	8	
Eastbound ▶	Bike	0	0		0	0				**0**
	Ped	1	2		0	0				**3**
Westbound ◀	Bike	0	0		0	0				**0**
	Ped	0	0		0	0				**0**

Hour	Southbound Ped ▼	Southbound Bike ▼	Northbound Ped ▲	Northbound Bike ▲
1 7:00	0	0	1	0
2 8:00	0	2	0	1
3				
4 16:00	0	1	0	1
5 17:00	0	1	0	0
6				
7				
8				
	0	**4**	**1**	**2**

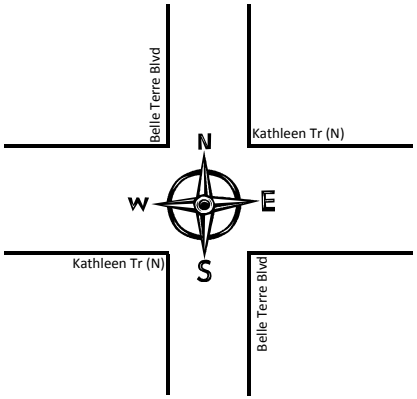

Southbound Ped ▼	Southbound Bike ▼	Northbound Ped ▲	Northbound Bike ▲	Hour
0	0	0	0	1 7:00
0	0	0	0	2 8:00
				3
0	0	0	0	4 16:00
0	0	0	0	5 17:00
				6
				7
				8
0	**0**	**0**	**0**	

		7:00	8:00		16:00	17:00				
		1	2	3	4	5	6	7	8	
Eastbound ▶	Bike	0	0		0	0				**0**
	Ped	2	0		0	0				**2**
Westbound ◀	Bike	0	0		0	0				**0**
	Ped	0	0		0	0				**0**

Hour

Roadway Count Summary

Vanasse Hangen Brustlin, Inc.

County	Flagler	**City**	Palm Coast
Intersection	Belle Terre Blvd	&	Karas Trail
Date	September 1, 2015		**All Vehicles**
Time Period	7:00 to 9:00		

VHB Project #: 62393

Time Period	Northbound Left	Northbound Through	Northbound Right	Southbound Left	Southbound Through	Southbound Right
7:00 - 7:15	0	15	0	2	55	0
7:15 - 7:30	0	32	0	1	43	0
7:30 - 7:45	0	30	2	4	65	0
7:45 - 8:00	0	25	1	5	46	0
8:00 - 8:15	0	25	0	2	45	0
8:15 - 8:30	0	25	0	2	43	0
8:30 - 8:45	0	21	0	5	40	0
8:45 - 9:00	0	25	2	2	40	0
	0	198	5	23	377	0

Time Period	Eastbound Left	Eastbound Through	Eastbound Right	Westbound Left	Westbound Through	Westbound Right
7:00 - 7:15	0	0	0	0	0	6
7:15 - 7:30	0	0	0	3	0	6
7:30 - 7:45	0	0	0	1	0	6
7:45 - 8:00	0	0	0	3	0	6
8:00 - 8:15	0	0	0	1	0	2
8:15 - 8:30	0	0	0	3	0	4
8:30 - 8:45	0	0	0	2	0	5
8:45 - 9:00	0	0	0	2	0	2
	0	0	0	15	0	37

North / South
Belle Terre Blvd

East / West
Karas Trail

Peak Hour
7:00 - 8:00

Peak Hour Factor
0.83

Total Pk Hr Voume
357

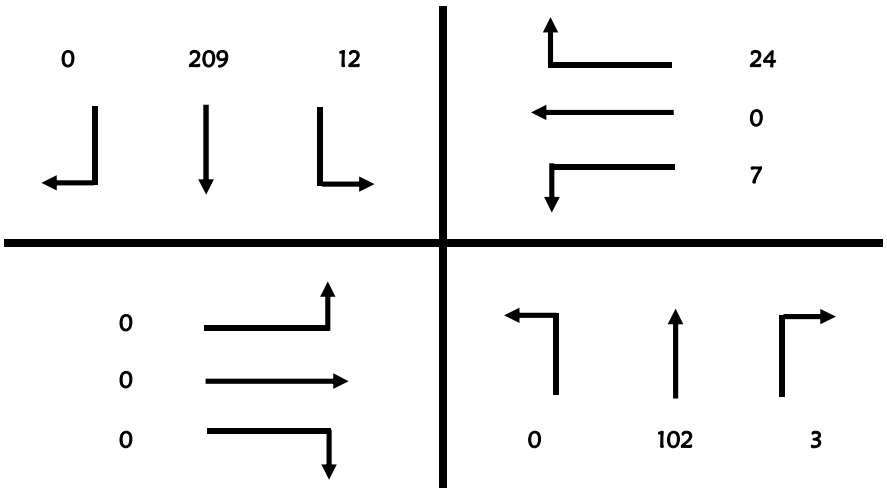

Roadway Count Summary

Vanasse Hangen Brustlin, Inc.

County	Flagler	**City**	Palm Coast
Intersection	Belle Terre Blvd	&	Karas Trail
Date	September 1, 2015		
Time Period	7:00 to 9:00		**Trucks**

VHB Project #: 62393

Time Period	Northbound			Southbound		
	Left	Through	Right	Left	Through	Right
7:00 - 7:15	0	1	0	0	1	0
7:15 - 7:30	0	5	0	0	0	0
7:30 - 7:45	0	2	1	0	0	0
7:45 - 8:00	0	0	0	0	1	0
8:00 - 8:15	0	1	0	1	1	0
8:15 - 8:30	0	2	0	0	1	0
8:30 - 8:45	0	2	0	0	0	0
8:45 - 9:00	0	1	0	1	1	0

Time Period	Eastbound			Westbound		
	Left	Through	Right	Left	Through	Right
7:00 - 7:15	0	0	0	0	0	0
7:15 - 7:30	0	0	0	0	0	0
7:30 - 7:45	0	0	0	0	0	0
7:45 - 8:00	0	0	0	1	0	0
8:00 - 8:15	0	0	0	0	0	0
8:15 - 8:30	0	0	0	2	0	0
8:30 - 8:45	0	0	0	0	0	0
8:45 - 9:00	0	0	0	0	0	0

North / South
Belle Terre Blvd

East / West
Karas Trail

Peak Hour
7:00 - 8:00

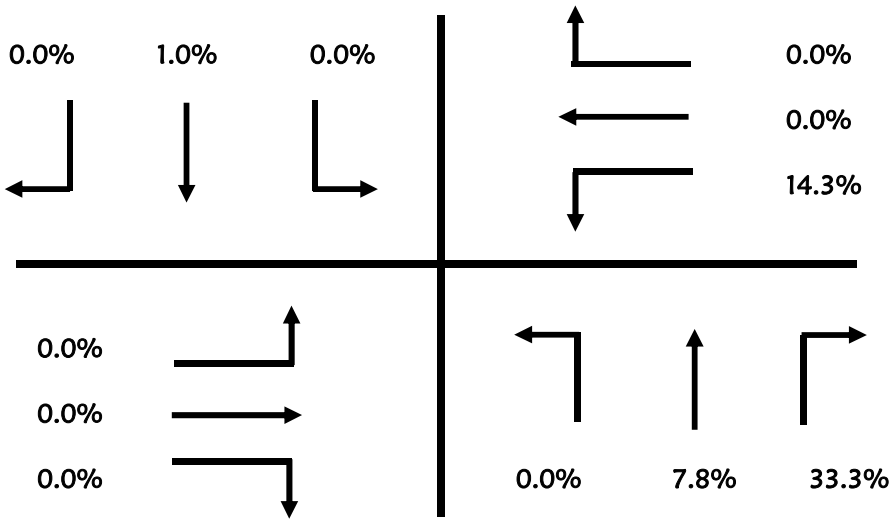

Roadway Count Summary

Vanasse Hangen Brustlin, Inc.

County	Flagler	**City**	Palm Coast
Intersection	Belle Terre Blvd	&	Karas Trail
Date	September 1, 2015		
Time Period	7:00 to 9:00		**U-Turn & RTOR**

VHB Project #: 62393

Time Period	Northbound			Southbound		
	Left	Through	Right	Left	Through	Right
7:00 - 7:15	0	0	0	0	0	0
7:15 - 7:30	0	0	0	0	0	0
7:30 - 7:45	0	0	0	0	0	0
7:45 - 8:00	0	0	0	0	0	0
8:00 - 8:15	0	0	0	0	0	0
8:15 - 8:30	0	0	0	0	0	0
8:30 - 8:45	0	0	0	0	0	0
8:45 - 9:00	0	0	0	0	0	0

Time Period	Eastbound			Westbound		
	Left	Through	Right	Left	Through	Right
7:00 - 7:15	0	0	0	0	0	0
7:15 - 7:30	0	0	0	0	0	0
7:30 - 7:45	0	0	0	0	0	0
7:45 - 8:00	0	0	0	0	0	0
8:00 - 8:15	0	0	0	0	0	0
8:15 - 8:30	0	0	0	0	0	0
8:30 - 8:45	0	0	0	0	0	0
8:45 - 9:00	0	0	0	0	0	0

North / South
Belle Terre Blvd

East / West
Karas Trail

Peak Hour
7:00 - 8:00

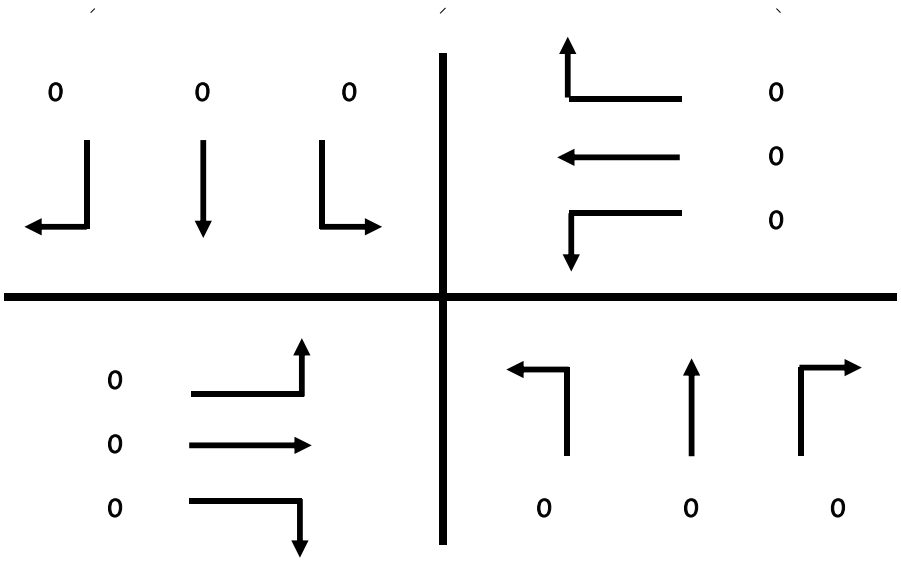

Roadway Count Summary

Vanasse Hangen Brustlin, Inc.

County	Flagler	**City**	Palm Coast
Intersection	Belle Terre Blvd	&	Karas Blvd
Date	September 1, 2015		**All Vehicles**
Time Period	16:00 to 18:00		

VHB Project #: 62393

Time Period	Northbound Left	Northbound Through	Northbound Right	Southbound Left	Southbound Through	Southbound Right
16:00 - 16:15	0	32	2	2	25	0
16:15 - 16:30	0	45	1	1	28	0
16:30 - 16:45	0	49	1	9	35	0
16:45 - 17:00	0	55	0	4	22	0
17:00 - 17:15	0	41	2	3	26	0
17:15 - 17:30	0	52	0	5	31	0
17:30 - 17:45	0	49	4	4	26	0
17:45 - 18:00	0	49	1	8	38	0
	0	372	11	36	231	0

Time Period	Eastbound Left	Eastbound Through	Eastbound Right	Westbound Left	Westbound Through	Westbound Right
16:00 - 16:15	0	0	0	1	0	3
16:15 - 16:30	0	0	0	2	0	2
16:30 - 16:45	0	0	0	1	0	7
16:45 - 17:00	0	0	0	1	0	8
17:00 - 17:15	0	0	0	2	0	7
17:15 - 17:30	0	0	0	2	0	2
17:30 - 17:45	0	0	0	0	0	5
17:45 - 18:00	0	0	0	2	0	8
	0	0	0	11	0	42

North / South
Belle Terre Blvd

East / West
Karas Blvd

Peak Hour
17:00 - 18:00

Peak Hour Factor
0.87

Total Pk Hr Voume
367

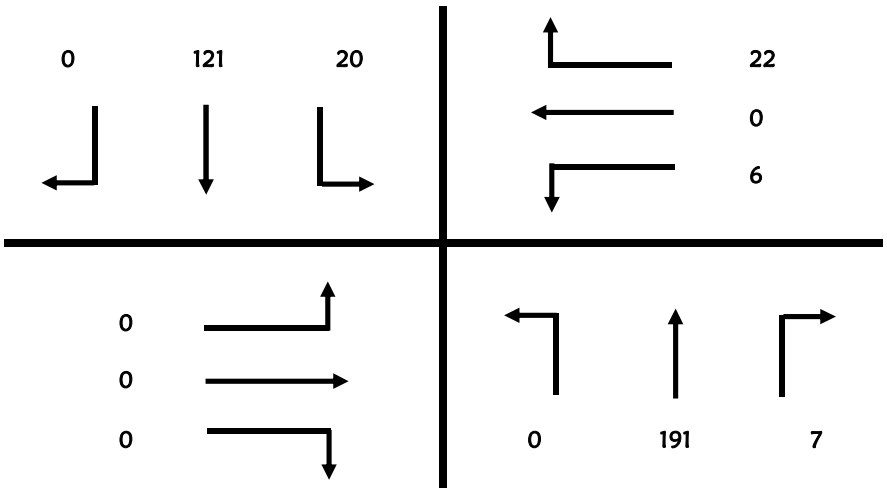

Roadway Count Summary

Vanasse Hangen Brustlin, Inc.

County	Flagler	**City**	Palm Coast
Intersection	Belle Terre Blvd	&	Karas Blvd
Date	September 1, 2015		
Time Period	16:00 to 18:00		**Trucks**

VHB Project #: 62393

Time Period	Northbound			Southbound		
	Left	Through	Right	Left	Through	Right
16:00 - 16:15	0	1	0	0	0	0
16:15 - 16:30	0	0	0	0	0	0
16:30 - 16:45	0	0	0	0	1	0
16:45 - 17:00	0	0	0	0	1	0
17:00 - 17:15	0	0	0	0	0	0
17:15 - 17:30	0	0	0	1	1	0
17:30 - 17:45	0	0	0	0	1	0
17:45 - 18:00	0	0	0	0	1	0

Time Period	Eastbound			Westbound		
	Left	Through	Right	Left	Through	Right
16:00 - 16:15	0	0	0	0	0	0
16:15 - 16:30	0	0	0	1	0	0
16:30 - 16:45	0	0	0	0	0	0
16:45 - 17:00	0	0	0	0	0	0
17:00 - 17:15	0	0	0	0	0	0
17:15 - 17:30	0	0	0	0	0	0
17:30 - 17:45	0	0	0	0	0	0
17:45 - 18:00	0	0	0	0	0	0

North / South
Belle Terre Blvd

East / West
Karas Blvd

Peak Hour
17:00 - 18:00

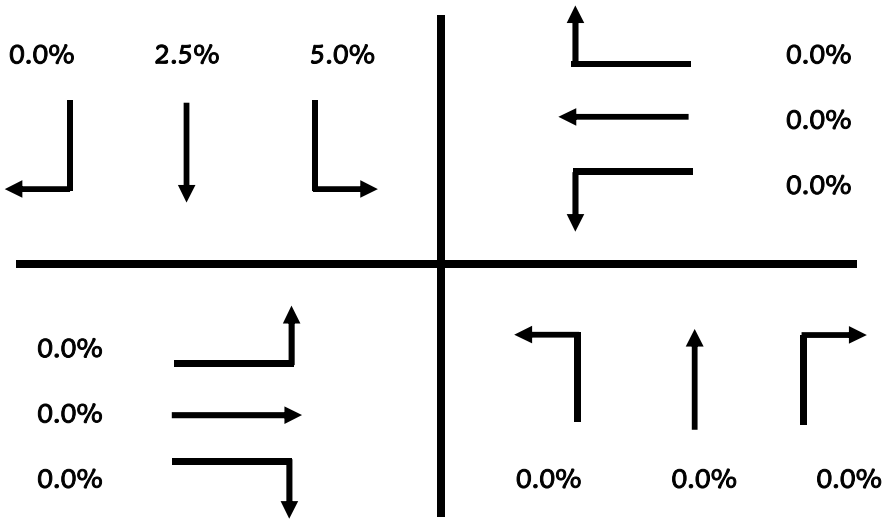

Roadway Count Summary

Vanasse Hangen Brustlin, Inc.

County	Flagler	**City**	Palm Coast
Intersection	Belle Terre Blvd	&	Karas Blvd
Date	September 1, 2015		
Time Period	16:00 to 18:00		**U-Turn & RTOR**

VHB Project #: 62393

Time Period	Northbound			Southbound		
	Left	Through	Right	Left	Through	Right
16:00 - 16:15	0	0	0	0	0	0
16:15 - 16:30	0	0	0	0	0	0
16:30 - 16:45	0	0	0	0	0	0
16:45 - 17:00	0	0	0	0	0	0
17:00 - 17:15	0	0	0	0	0	0
17:15 - 17:30	0	0	0	0	0	0
17:30 - 17:45	0	0	0	0	0	0
17:45 - 18:00	0	0	0	0	0	0

Time Period	Eastbound			Westbound		
	Left	Through	Right	Left	Through	Right
16:00 - 16:15	0	0	0	0	0	0
16:15 - 16:30	0	0	0	0	0	0
16:30 - 16:45	0	0	0	0	0	0
16:45 - 17:00	0	0	0	0	0	0
17:00 - 17:15	0	0	0	0	0	0
17:15 - 17:30	0	0	0	0	0	0
17:30 - 17:45	0	0	0	0	0	0
17:45 - 18:00	0	0	0	0	0	0

North / South
Belle Terre Blvd

East / West
Karas Blvd

Peak Hour
17:00 - 18:00

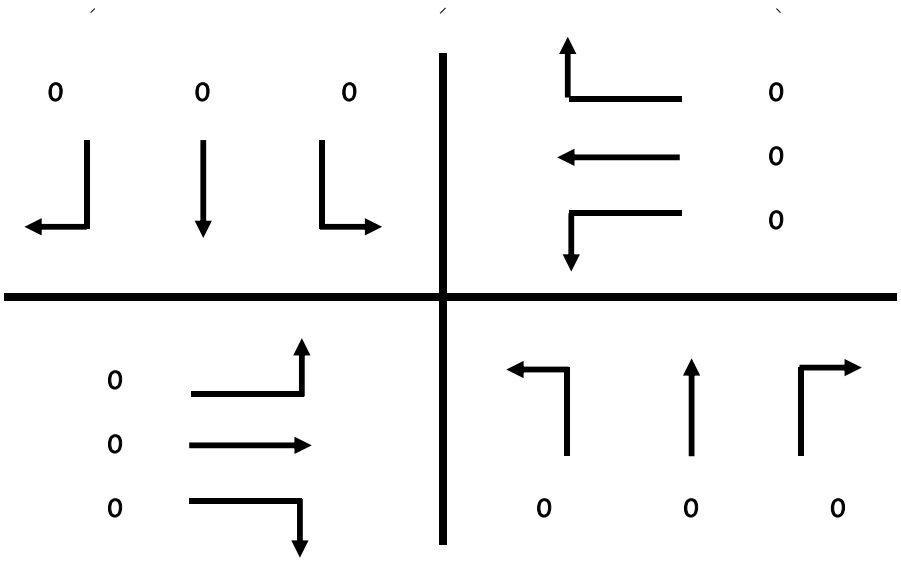

Pedestrian & Bicycle Summary

Project #: 62393 **NB/SB:** Belle Terre Blvd

Date: 9/1/2015 **EB/WB:** Karas Blvd

Hour

		7:00	8:00		16:00	17:00				
		1	2	3	4	5	6	7	8	
Eastbound ▶	Bike	0	0		0	0				0
	Ped	0	0		0	0				0
Westbound ◀	Bike	0	0		0	0				0
	Ped	0	0		0	0				0

Hour	Southbound Ped ▼	Southbound Bike ▼	Northbound Ped ▲	Northbound Bike ▲
1 7:00	0	0	0	0
2 8:00	0	0	1	0
3				
4 16:00	0	0	0	0
5 17:00	0	0	0	0
6				
7				
8				
	0	0	1	0

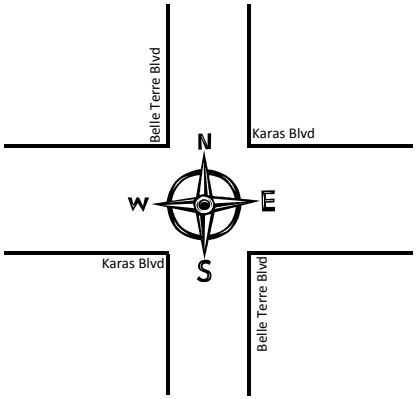

Hour	Southbound Ped ▼	Southbound Bike ▼	Northbound Ped ▲	Northbound Bike ▲
1 7:00	2	0	0	0
2 8:00	0	0	0	0
3				
4 16:00	0	0	0	0
5 17:00	0	0	0	0
6				
7				
8				
	2	0	0	0

		7:00	8:00		16:00	17:00				
		1	2	3	4	5	6	7	8	
Eastbound ▶	Bike	0	0		0	0				0
	Ped	0	0		0	0				0
Westbound ◀	Bike	0	0		0	0				0
	Ped	0	0		0	0				0

Hour

Roadway Count Summary

Vanasse Hangen Brustlin, Inc.

County	Flagler	**City**	Palm Coast
Intersection	Belle Terre Blvd		& Citation Blvd
Date	September 1, 2015		**All Vehicles**
Time Period	7:00 to 9:00		

VHB Project #: 62393

Time Period	Northbound Left	Northbound Through	Northbound Right	Southbound Left	Southbound Through	Southbound Right
7:00 - 7:15	0	23	0	2	52	0
7:15 - 7:30	0	33	2	0	40	0
7:30 - 7:45	0	32	6	1	61	0
7:45 - 8:00	0	30	0	1	49	0
8:00 - 8:15	0	27	5	2	36	0
8:15 - 8:30	0	26	2	1	40	0
8:30 - 8:45	0	25	0	1	44	0
8:45 - 9:00	0	24	4	3	38	0
	0	220	19	11	360	0

Time Period	Eastbound Left	Eastbound Through	Eastbound Right	Westbound Left	Westbound Through	Westbound Right
7:00 - 7:15	0	0	0	10	0	3
7:15 - 7:30	0	0	0	7	0	1
7:30 - 7:45	0	0	0	5	0	1
7:45 - 8:00	0	0	0	5	0	4
8:00 - 8:15	0	0	0	10	0	1
8:15 - 8:30	0	0	0	4	0	6
8:30 - 8:45	0	0	0	6	0	1
8:45 - 9:00	0	0	0	3	0	1
	0	0	0	50	0	18

North / South
Belle Terre Blvd

East / West
Citation Blvd

Peak Hour
7:00 - 8:00

Peak Hour Factor
0.87

Total Pk Hr Voume
368

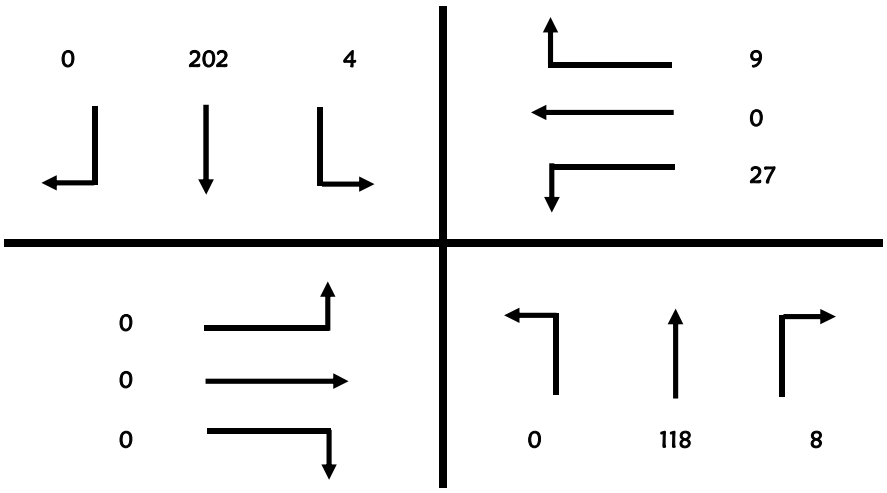

Roadway Count Summary

Vanasse Hangen Brustlin, Inc.

County	Flagler	**City**	Palm Coast
Intersection	Belle Terre Blvd	&	Citation Blvd
Date	September 1, 2015		
Time Period	7:00 to 9:00		**Trucks**

VHB Project #: 62393

Time Period	Northbound			Southbound		
	Left	Through	Right	Left	Through	Right
7:00 - 7:15	0	1	0	2	1	0
7:15 - 7:30	0	3	0	0	0	0
7:30 - 7:45	0	1	2	0	0	0
7:45 - 8:00	0	1	0	0	1	0
8:00 - 8:15	0	1	0	1	2	0
8:15 - 8:30	0	1	1	0	1	0
8:30 - 8:45	0	1	0	0	2	0
8:45 - 9:00	0	2	0	0	1	0

Time Period	Eastbound			Westbound		
	Left	Through	Right	Left	Through	Right
7:00 - 7:15	0	0	0	0	0	0
7:15 - 7:30	0	0	0	0	0	0
7:30 - 7:45	0	0	0	0	0	0
7:45 - 8:00	0	0	0	0	0	0
8:00 - 8:15	0	0	0	0	0	0
8:15 - 8:30	0	0	0	0	0	0
8:30 - 8:45	0	0	0	0	0	0
8:45 - 9:00	0	0	0	0	0	0

North / South
Belle Terre Blvd

East / West
Citation Blvd

Peak Hour
7:00 - 8:00

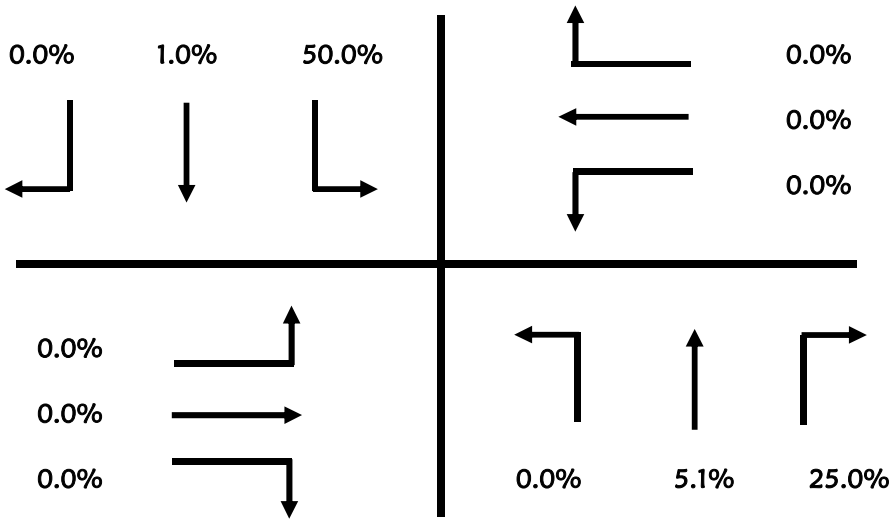

Roadway Count Summary

Vanasse Hangen Brustlin, Inc.

County	Flagler	**City**	Palm Coast
Intersection	Belle Terre Blvd	&	Citation Blvd
Date	September 1, 2015		
Time Period	7:00 to 9:00		**U-Turn & RTOR**

VHB Project #: 62393

Time Period	Northbound			Southbound		
	Left	Through	Right	Left	Through	Right
7:00 - 7:15	0	0	0	0	0	0
7:15 - 7:30	0	0	0	0	0	0
7:30 - 7:45	0	0	0	0	0	0
7:45 - 8:00	0	0	0	0	0	0
8:00 - 8:15	0	0	0	0	0	0
8:15 - 8:30	0	0	0	0	0	0
8:30 - 8:45	0	0	0	0	0	0
8:45 - 9:00	0	0	0	0	0	0

Time Period	Eastbound			Westbound		
	Left	Through	Right	Left	Through	Right
7:00 - 7:15	0	0	0	0	0	0
7:15 - 7:30	0	0	0	0	0	0
7:30 - 7:45	0	0	0	0	0	0
7:45 - 8:00	0	0	0	0	0	0
8:00 - 8:15	0	0	0	0	0	0
8:15 - 8:30	0	0	0	0	0	0
8:30 - 8:45	0	0	0	0	0	0
8:45 - 9:00	0	0	0	0	0	0

North / South
Belle Terre Blvd

East / West
Citation Blvd

Peak Hour
7:00 - 8:00

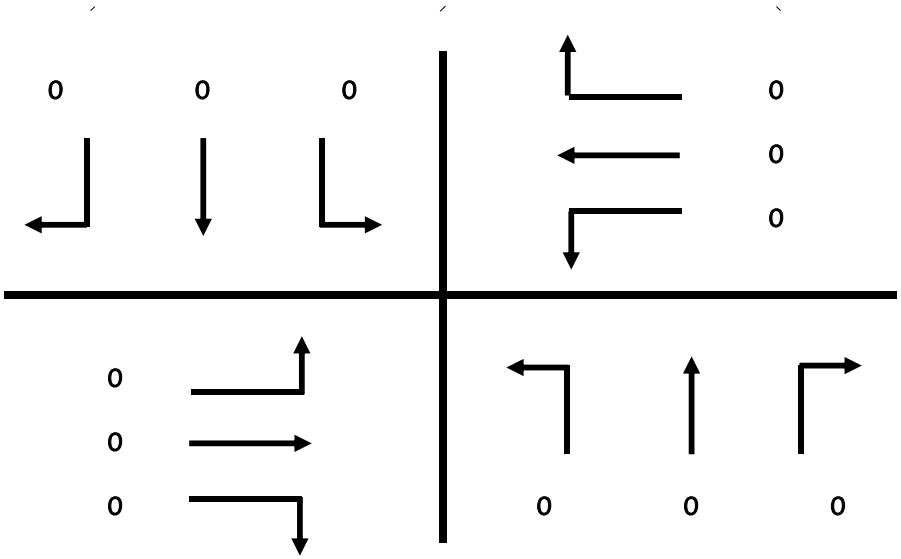

Roadway Count Summary

Vanasse Hangen Brustlin, Inc.

County	Flagler	**City**	Palm Coast
Intersection	Belle Terre Blvd		& Citation Blvd
Date	September 1, 2015		**All Vehicles**
Time Period	16:00 to 18:00		

VHB Project #: 62393

Time Period	Northbound Left	Northbound Through	Northbound Right	Southbound Left	Southbound Through	Southbound Right
16:00 - 16:15	0	32	3	1	27	0
16:15 - 16:30	0	45	5	0	28	0
16:30 - 16:45	0	47	7	1	36	0
16:45 - 17:00	0	58	5	4	26	0
17:00 - 17:15	0	43	4	1	28	0
17:15 - 17:30	0	51	5	2	36	0
17:30 - 17:45	0	48	8	4	29	0
17:45 - 18:00	0	53	3	1	35	0
	0	377	40	14	245	0

Time Period	Eastbound Left	Eastbound Through	Eastbound Right	Westbound Left	Westbound Through	Westbound Right
16:00 - 16:15	0	0	0	1	0	2
16:15 - 16:30	0	0	0	3	0	2
16:30 - 16:45	0	0	0	4	0	2
16:45 - 17:00	0	0	0	1	0	3
17:00 - 17:15	0	0	0	3	0	1
17:15 - 17:30	0	0	0	3	0	2
17:30 - 17:45	0	0	0	3	0	1
17:45 - 18:00	0	0	0	5	0	0
	0	0	0	23	0	13

North / South
Belle Terre Blvd

East / West
Citation Blvd

Peak Hour
16:30 - 17:30

Peak Hour Factor
0.94

Total Pk Hr Voume
373

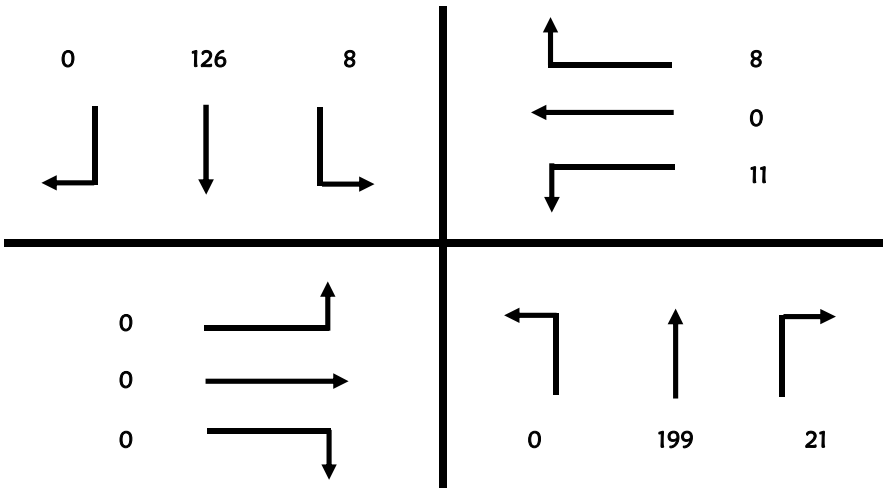

Roadway Count Summary

Vanasse Hangen Brustlin, Inc.

County	Flagler	**City**	Palm Coast
Intersection	Belle Terre Blvd	&	Citation Blvd
Date	September 1, 2015		
Time Period	16:00 to 18:00		**Trucks**

VHB Project #: 62393

Time Period	Northbound			Southbound		
	Left	Through	Right	Left	Through	Right
16:00 - 16:15	0	1	0	1	0	0
16:15 - 16:30	0	0	0	0	0	0
16:30 - 16:45	0	0	0	0	1	0
16:45 - 17:00	0	0	0	0	1	0
17:00 - 17:15	0	0	0	0	0	0
17:15 - 17:30	0	0	0	0	3	0
17:30 - 17:45	0	0	0	0	1	0
17:45 - 18:00	0	0	0	0	0	0

Time Period	Eastbound			Westbound		
	Left	Through	Right	Left	Through	Right
16:00 - 16:15	0	0	0	0	0	0
16:15 - 16:30	0	0	0	0	0	0
16:30 - 16:45	0	0	0	0	0	0
16:45 - 17:00	0	0	0	0	0	0
17:00 - 17:15	0	0	0	0	0	0
17:15 - 17:30	0	0	0	0	0	0
17:30 - 17:45	0	0	0	0	0	0
17:45 - 18:00	0	0	0	1	0	0

North / South
Belle Terre Blvd

East / West
Citation Blvd

Peak Hour
16:30 - 17:30

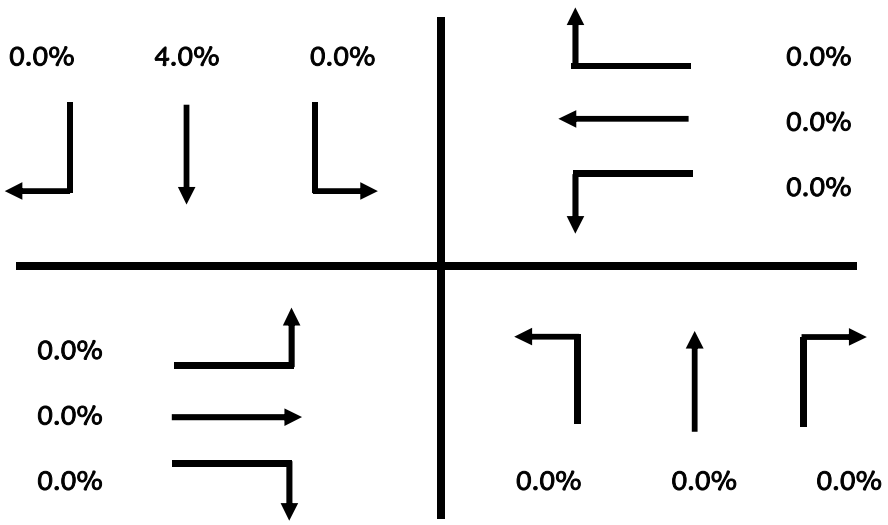

Roadway Count Summary

Vanasse Hangen Brustlin, Inc.

County	Flagler	**City**	Palm Coast
Intersection	Belle Terre Blvd	&	Citation Blvd
Date	September 1, 2015		
Time Period	16:00 to 18:00		**U-Turn & RTOR**

VHB Project #: 62393

Time Period	Northbound			Southbound		
	Left	Through	Right	Left	Through	Right
16:00 - 16:15	0	0	0	0	0	0
16:15 - 16:30	0	0	0	0	0	0
16:30 - 16:45	0	0	0	0	0	0
16:45 - 17:00	0	0	0	0	0	0
17:00 - 17:15	0	0	0	0	0	0
17:15 - 17:30	0	0	0	0	0	0
17:30 - 17:45	0	0	0	0	0	0
17:45 - 18:00	0	0	0	0	0	0

Time Period	Eastbound			Westbound		
	Left	Through	Right	Left	Through	Right
16:00 - 16:15	0	0	0	0	0	0
16:15 - 16:30	0	0	0	0	0	0
16:30 - 16:45	0	0	0	0	0	0
16:45 - 17:00	0	0	0	0	0	0
17:00 - 17:15	0	0	0	0	0	0
17:15 - 17:30	0	0	0	0	0	0
17:30 - 17:45	0	0	0	0	0	0
17:45 - 18:00	0	0	0	0	0	0

North / South
Belle Terre Blvd

East / West
Citation Blvd

Peak Hour
16:30 - 17:30

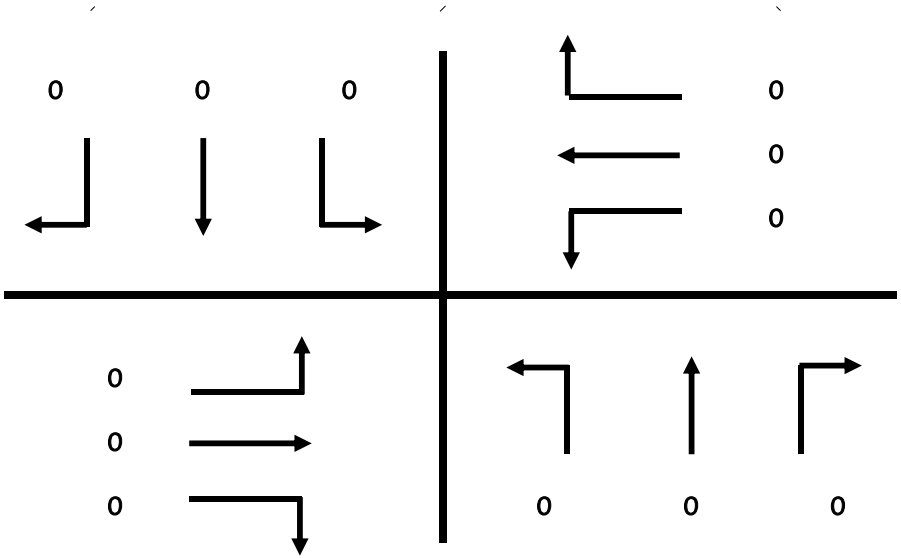

Pedestrian & Bicycle Summary

Project #: 62393 **NB/SB:** Belle Terre Blvd

Date: 9/1/2015 **EB/WB:** Citation Blvd

Hour

		7:00	8:00		16:00	17:00				
		1	2	3	4	5	6	7	8	
Eastbound ▶	Bike	0	0		0	0				0
	Ped	0	0		0	0				0
Westbound ◀	Bike	2	0		0	0				2
	Ped	0	0		0	0				0

Hour	Southbound Ped ▼	Southbound Bike ▼	Northbound Ped ▲	Northbound Bike ▲
1 7:00	0	0	0	0
2 8:00	0	0	0	0
3				
4 16:00	0	0	0	0
5 17:00	0	0	0	0
6				
7				
8				
	0	0	0	0

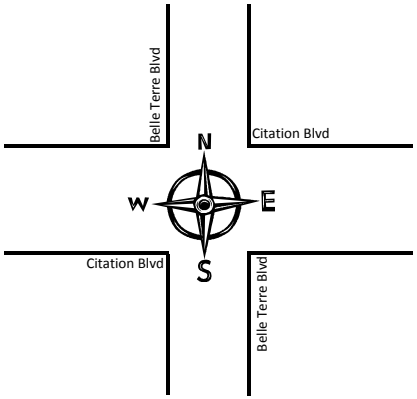

Southbound Ped ▼	Southbound Bike ▼	Northbound Ped ▲	Northbound Bike ▲	Hour
0	0	0	0	1 7:00
0	0	0	0	2 8:00
				3
0	0	0	0	4 16:00
0	0	0	0	5 17:00
				6
				7
				8
0	0	0	0	

		7:00	8:00		16:00	17:00				
		1	2	3	4	5	6	7	8	
Eastbound ▶	Bike	0	0		0	0				0
	Ped	0	0		0	0				0
Westbound ◀	Bike	0	0		0	0				0
	Ped	0	0		0	0				0

Hour

Roadway Count Summary

Vanasse Hangen Brustlin, Inc.

County	Flagler	**City**	Palm Coast
Intersection	Belle Terre Blvd		& Zonal Geranium Trail (S)
Date	September 1, 2015		**All Vehicles**
Time Period	7:00 to 9:00		

VHB Project #: 62393

Time Period	Northbound Left	Northbound Through	Northbound Right	Southbound Left	Southbound Through	Southbound Right
7:00 - 7:15	0	27	0	0	42	1
7:15 - 7:30	0	36	0	0	50	2
7:30 - 7:45	0	38	0	0	48	3
7:45 - 8:00	1	25	0	0	46	2
8:00 - 8:15	1	26	0	0	36	2
8:15 - 8:30	1	27	0	0	41	4
8:30 - 8:45	0	26	0	0	37	5
8:45 - 9:00	3	24	0	0	39	1
	6	229	0	0	339	20

Time Period	Eastbound Left	Eastbound Through	Eastbound Right	Westbound Left	Westbound Through	Westbound Right
7:00 - 7:15	2	0	7	0	0	0
7:15 - 7:30	0	0	3	0	0	0
7:30 - 7:45	5	0	3	0	0	0
7:45 - 8:00	4	0	4	0	0	0
8:00 - 8:15	5	0	5	0	0	0
8:15 - 8:30	3	0	7	0	0	0
8:30 - 8:45	7	0	1	0	0	0
8:45 - 9:00	3	0	3	0	0	0
	29	0	33	0	0	0

North / South
Belle Terre Blvd

East / West
Zonal Geranium Trail (S)

Peak Hour
7:00 - 8:00

Peak Hour Factor
0.90

Total Pk Hr Voume
349

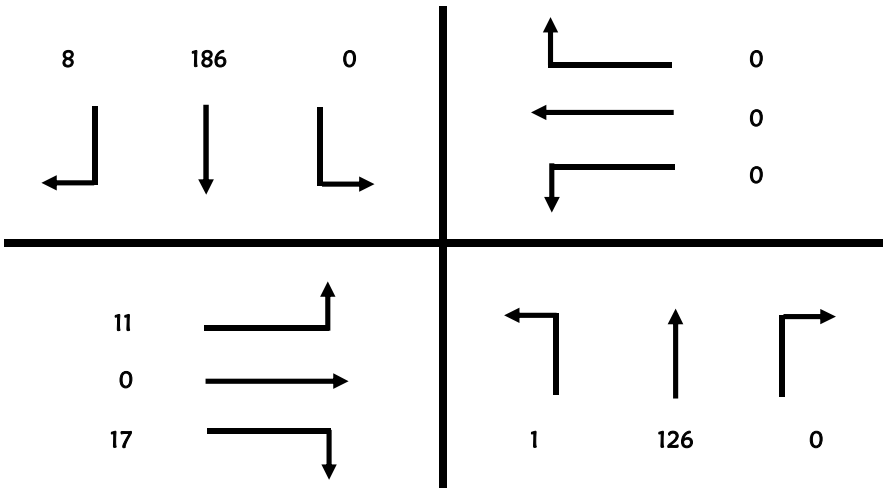

Roadway Count Summary

Vanasse Hangen Brustlin, Inc.

County	Flagler	**City**	Palm Coast
Intersection	Belle Terre Blvd	&	Zonal Geranium Trail (S)
Date	September 1, 2015		
Time Period	7:00 to 9:00		**Trucks**

VHB Project #: 62393

Time Period	Northbound			Southbound		
	Left	Through	Right	Left	Through	Right
7:00 - 7:15	0	2	0	0	3	0
7:15 - 7:30	0	1	0	0	1	0
7:30 - 7:45	0	1	0	0	1	0
7:45 - 8:00	0	0	0	0	1	0
8:00 - 8:15	0	1	0	0	4	0
8:15 - 8:30	1	0	0	0	1	0
8:30 - 8:45	0	1	0	0	2	0
8:45 - 9:00	0	0	0	0	1	0

Time Period	Eastbound			Westbound		
	Left	Through	Right	Left	Through	Right
7:00 - 7:15	0	0	1	0	0	0
7:15 - 7:30	0	0	0	0	0	0
7:30 - 7:45	0	0	0	0	0	0
7:45 - 8:00	0	0	0	0	0	0
8:00 - 8:15	0	0	0	0	0	0
8:15 - 8:30	0	0	1	0	0	0
8:30 - 8:45	0	0	0	0	0	0
8:45 - 9:00	0	0	0	0	0	0

North / South
Belle Terre Blvd

East / West
Zonal Geranium Trail (S)

Peak Hour
7:00 - 8:00

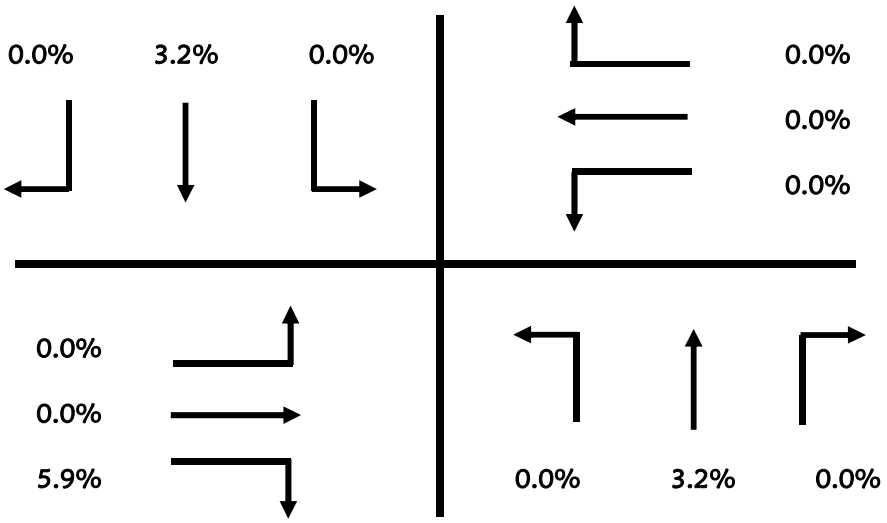

Roadway Count Summary

Vanasse Hangen Brustlin, Inc.

County	Flagler	**City**	Palm Coast
Intersection	Belle Terre Blvd	&	Zonal Geranium Trail (S)
Date	September 1, 2015		
Time Period	7:00 to 9:00		**U-Turn & RTOR**

VHB Project #: 62393

Time Period	Northbound Left	Northbound Through	Northbound Right	Southbound Left	Southbound Through	Southbound Right
7:00 - 7:15	0	0	0	0	0	0
7:15 - 7:30	0	0	0	0	0	0
7:30 - 7:45	0	0	0	0	0	0
7:45 - 8:00	0	0	0	0	0	0
8:00 - 8:15	0	0	0	0	0	0
8:15 - 8:30	0	0	0	0	0	0
8:30 - 8:45	0	0	0	0	0	0
8:45 - 9:00	0	0	0	0	0	0

Time Period	Eastbound Left	Eastbound Through	Eastbound Right	Westbound Left	Westbound Through	Westbound Right
7:00 - 7:15	0	0	0	0	0	0
7:15 - 7:30	0	0	0	0	0	0
7:30 - 7:45	0	0	0	0	0	0
7:45 - 8:00	0	0	0	0	0	0
8:00 - 8:15	0	0	0	0	0	0
8:15 - 8:30	0	0	0	0	0	0
8:30 - 8:45	0	0	0	0	0	0
8:45 - 9:00	0	0	0	0	0	0

North / South
Belle Terre Blvd

East / West
Zonal Geranium Trail (S)

Peak Hour
7:00 - 8:00

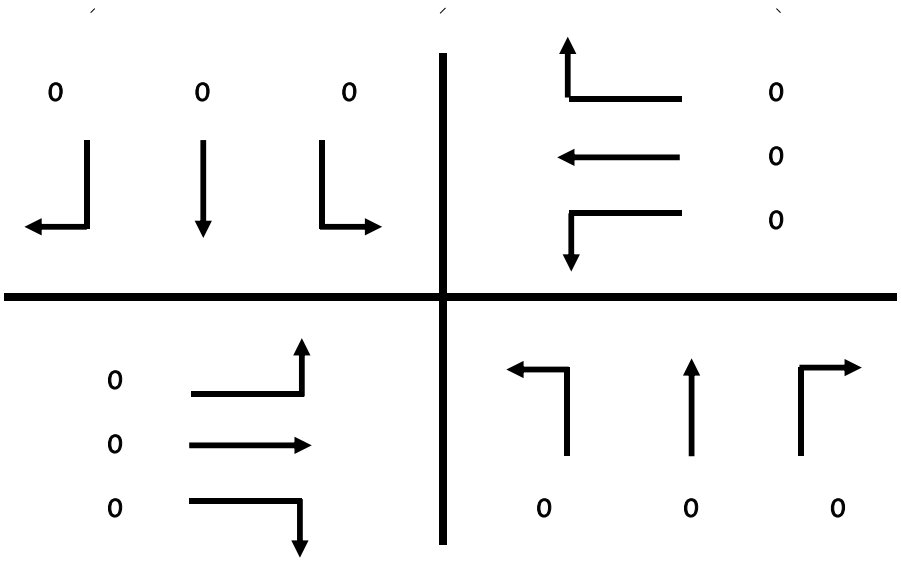

Roadway Count Summary

Vanasse Hangen Brustlin, Inc.

County	Flagler	**City**	Palm Coast
Intersection	Belle Terre Blvd		& Zonal Geranium Trail (S)
Date	September 1, 2015		**All Vehicles**
Time Period	16:00 to 18:00		

VHB Project #: 62393

Time Period	Northbound Left	Northbound Through	Northbound Right	Southbound Left	Southbound Through	Southbound Right
16:00 - 16:15	3	42	0	0	25	4
16:15 - 16:30	0	40	0	0	30	7
16:30 - 16:45	1	45	0	0	34	1
16:45 - 17:00	4	56	0	0	32	6
17:00 - 17:15	5	46	0	0	36	4
17:15 - 17:30	9	38	0	0	30	7
17:30 - 17:45	3	60	0	0	28	7
17:45 - 18:00	2	37	0	0	38	4
	27	364	0	0	253	40

Time Period	Eastbound Left	Eastbound Through	Eastbound Right	Westbound Left	Westbound Through	Westbound Right
16:00 - 16:15	3	0	2	0	0	0
16:15 - 16:30	5	0	1	0	0	0
16:30 - 16:45	5	0	0	0	0	0
16:45 - 17:00	3	0	1	0	0	0
17:00 - 17:15	2	0	0	0	0	0
17:15 - 17:30	5	0	4	0	0	0
17:30 - 17:45	4	0	3	0	0	0
17:45 - 18:00	4	0	0	0	0	0
	31	0	11	0	0	0

North / South
Belle Terre Blvd

East / West
Zonal Geranium Trail (S)

Peak Hour
16:45 - 17:45

Peak Hour Factor
0.94

Total Pk Hr Voume
393

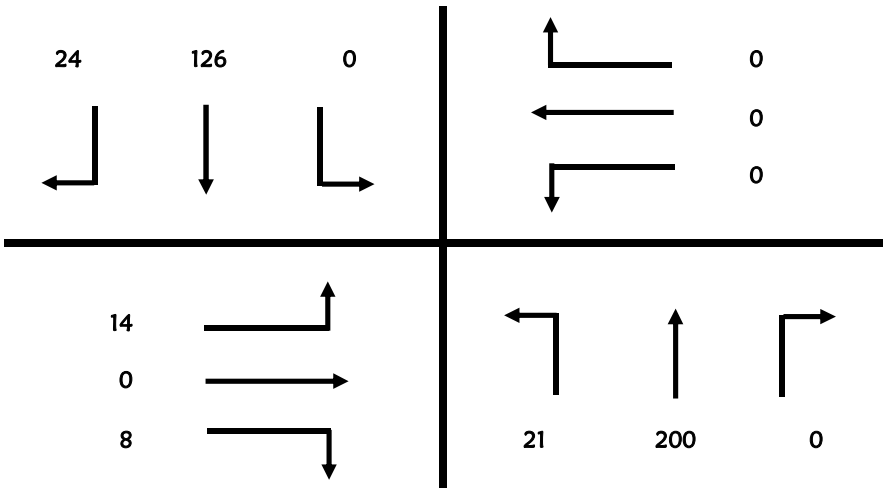

Roadway Count Summary

Vanasse Hangen Brustlin, Inc.

County	Flagler	**City**	Palm Coast
Intersection	Belle Terre Blvd	&	Zonal Geranium Trail (S)
Date	September 1, 2015		
Time Period	16:00 to 18:00		**Trucks**

VHB Project #: 62393

Time Period	Northbound			Southbound		
	Left	Through	Right	Left	Through	Right
16:00 - 16:15	0	0	0	0	0	0
16:15 - 16:30	0	0	0	0	2	0
16:30 - 16:45	0	0	0	0	1	0
16:45 - 17:00	0	1	0	0	1	0
17:00 - 17:15	0	0	0	0	0	0
17:15 - 17:30	0	1	0	0	1	0
17:30 - 17:45	0	0	0	0	0	0
17:45 - 18:00	0	0	0	0	0	0

Time Period	Eastbound			Westbound		
	Left	Through	Right	Left	Through	Right
16:00 - 16:15	0	0	1	0	0	0
16:15 - 16:30	0	0	0	0	0	0
16:30 - 16:45	0	0	0	0	0	0
16:45 - 17:00	0	0	0	0	0	0
17:00 - 17:15	0	0	0	0	0	0
17:15 - 17:30	0	0	0	0	0	0
17:30 - 17:45	0	0	0	0	0	0
17:45 - 18:00	0	0	0	0	0	0

North / South
Belle Terre Blvd

East / West
Zonal Geranium Trail (S)

Peak Hour
16:45 - 17:45

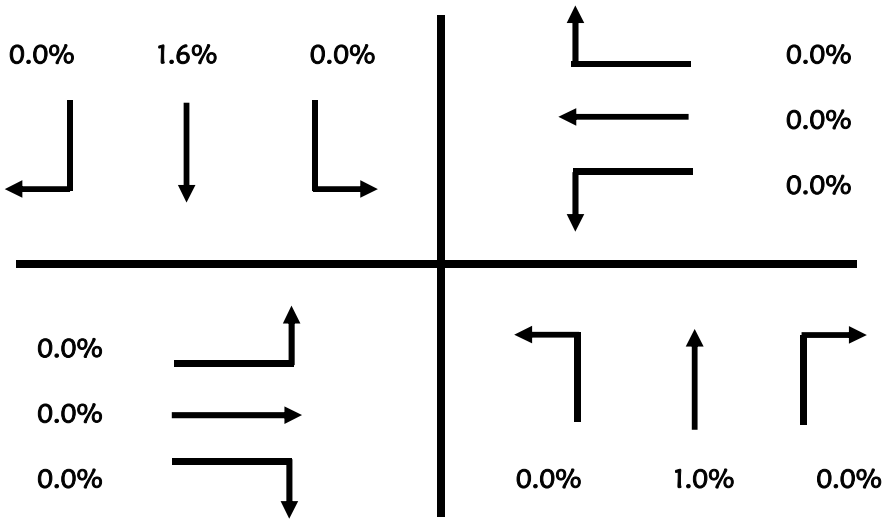

Roadway Count Summary

Vanasse Hangen Brustlin, Inc.

County	Flagler	**City**	Palm Coast
Intersection	Belle Terre Blvd	&	Zonal Geranium Trail (S)
Date	September 1, 2015		
Time Period	16:00 to 18:00		**U-Turn & RTOR**

VHB Project #: 62393

Time Period	Northbound			Southbound		
	Left	Through	Right	Left	Through	Right
16:00 - 16:15	0	0	0	0	0	0
16:15 - 16:30	0	0	0	0	0	0
16:30 - 16:45	0	0	0	0	0	0
16:45 - 17:00	0	0	0	0	0	0
17:00 - 17:15	0	0	0	0	0	0
17:15 - 17:30	0	0	0	0	0	0
17:30 - 17:45	0	0	0	0	0	0
17:45 - 18:00	0	0	0	0	0	0

Time Period	Eastbound			Westbound		
	Left	Through	Right	Left	Through	Right
16:00 - 16:15	0	0	0	0	0	0
16:15 - 16:30	0	0	0	0	0	0
16:30 - 16:45	0	0	0	0	0	0
16:45 - 17:00	0	0	0	0	0	0
17:00 - 17:15	0	0	0	0	0	0
17:15 - 17:30	0	0	0	0	0	0
17:30 - 17:45	0	0	0	0	0	0
17:45 - 18:00	0	0	0	0	0	0

North / South
Belle Terre Blvd

East / West
Zonal Geranium Trail (S)

Peak Hour
16:45 - 17:45

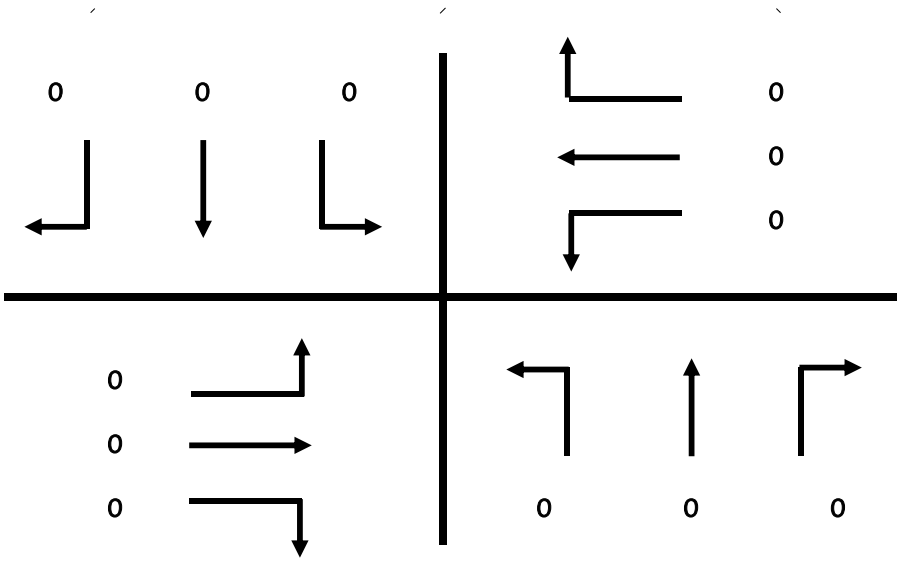

Pedestrian & Bicycle Summary

Project #: 62393 **NB/SB:** Belle Terre Blvd

Date: 9/1/2015 **EB/WB:** Zonal Geranium Trail (S)

Hour

		7:00	8:00		16:00	17:00				
		1	2	3	4	5	6	7	8	
Eastbound ▶	Bike	0	0		0	0				**0**
	Ped	1	0		0	0				**1**
Westbound ◀	Bike	0	0		0	0				**0**
	Ped	0	0		0	0				**0**

		Southbound		Northbound			Southbound		Northbound		
	Hour	Ped ▼	Bike	Ped ▲	Bike		Ped ▼	Bike	Ped ▲	Bike	Hour
1	7:00	0	0	0	0		0	0	0	0	7:00
2	8:00	0	0	0	0		0	0	0	0	8:00
3											
4	16:00	0	0	0	0		0	0	0	0	16:00
5	17:00	0	0	0	0		0	0	0	0	17:00
6											
7											
8											
		0	**0**	**0**	**0**		**0**	**0**	**0**	**0**	

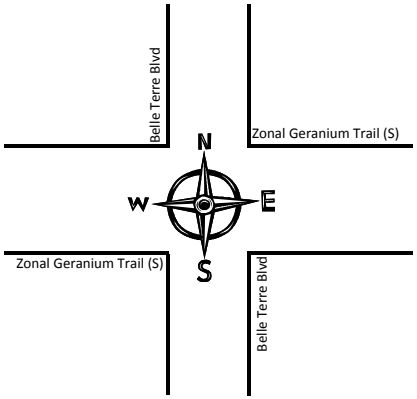

Eastbound ▶	Bike	0	0		0	1				**1**
	Ped	1	0		1	0				**2**
Westbound ◀	Bike	0	0		0	0				**0**
	Ped	0	0		0	0				**0**
		7:00	8:00		16:00	17:00				
		1	2	3	4	5	6	7	8	

Hour

Roadway Count Summary

Vanasse Hangen Brustlin, Inc.

County	Flagler	**City**	Palm Coast
Intersection	Belle Terre Blvd		& Zonal Geranium Trail (N)
Date	September 1, 2015		**All Vehicles**
Time Period	7:00 to 9:00		

VHB Project #: 62393

Time Period	Northbound Left	Northbound Through	Northbound Right	Southbound Left	Southbound Through	Southbound Right
7:00 - 7:15	0	30	0	0	40	3
7:15 - 7:30	1	32	0	0	41	0
7:30 - 7:45	2	39	0	0	59	0
7:45 - 8:00	1	36	0	0	43	2
8:00 - 8:15	0	29	0	0	34	4
8:15 - 8:30	0	35	0	0	36	1
8:30 - 8:45	0	30	0	0	44	0
8:45 - 9:00	0	29	0	0	44	8
	4	260	0	0	341	18

Time Period	Eastbound Left	Eastbound Through	Eastbound Right	Westbound Left	Westbound Through	Westbound Right
7:00 - 7:15	3	0	5	0	0	0
7:15 - 7:30	2	0	1	0	0	0
7:30 - 7:45	5	0	3	0	0	0
7:45 - 8:00	5	0	2	0	0	0
8:00 - 8:15	2	0	1	0	0	0
8:15 - 8:30	9	0	4	0	0	0
8:30 - 8:45	7	0	1	0	0	0
8:45 - 9:00	2	0	1	0	0	0
	35	0	18	0	0	0

North / South
Belle Terre Blvd

East / West
Zonal Geranium Trail (N)

Peak Hour
7:00 - 8:00

Peak Hour Factor
0.82

Total Pk Hr Voume
355

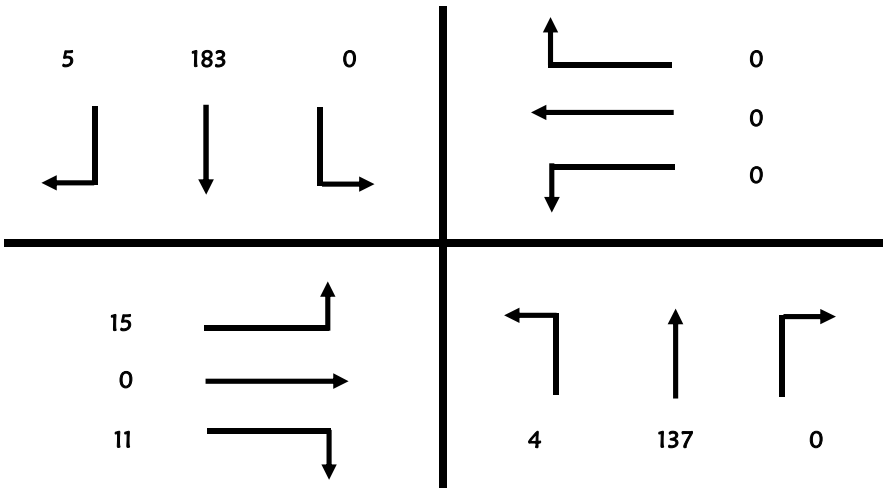

Roadway Count Summary

Vanasse Hangen Brustlin, Inc.

County	Flagler	**City**	Palm Coast
Intersection	Belle Terre Blvd	&	Zonal Geranium Trail (N)
Date	September 1, 2015		
Time Period	7:00 to 9:00		**Trucks**

VHB Project #: 62393

Time Period	Northbound			Southbound		
	Left	Through	Right	Left	Through	Right
7:00 - 7:15	0	1	0	0	3	1
7:15 - 7:30	0	2	0	0	1	0
7:30 - 7:45	0	2	0	0	1	0
7:45 - 8:00	0	1	0	0	1	1
8:00 - 8:15	0	1	0	0	4	1
8:15 - 8:30	0	1	0	0	1	1
8:30 - 8:45	0	1	0	0	1	0
8:45 - 9:00	0	1	0	0	2	1

Time Period	Eastbound			Westbound		
	Left	Through	Right	Left	Through	Right
7:00 - 7:15	0	0	0	0	0	0
7:15 - 7:30	0	0	0	0	0	0
7:30 - 7:45	0	0	0	0	0	0
7:45 - 8:00	0	0	0	0	0	0
8:00 - 8:15	0	0	0	0	0	0
8:15 - 8:30	0	0	1	0	0	0
8:30 - 8:45	1	0	0	0	0	0
8:45 - 9:00	0	0	0	0	0	0

North / South
Belle Terre Blvd

East / West
Zonal Geranium Trail (N)

Peak Hour
7:00 - 8:00

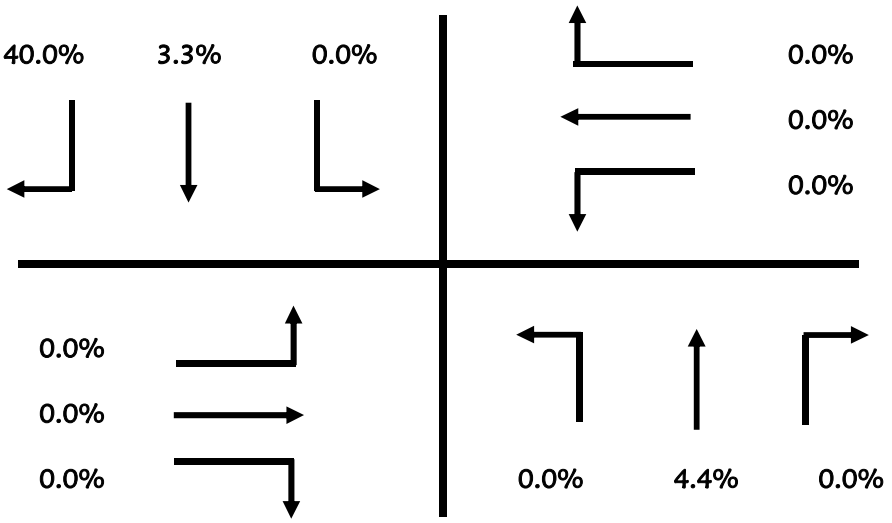

Roadway Count Summary

Vanasse Hangen Brustlin, Inc.

County	Flagler	**City**	Palm Coast
Intersection	Belle Terre Blvd	&	Zonal Geranium Trail (N)
Date	September 1, 2015		
Time Period	7:00 to 9:00		**U-Turn & RTOR**

VHB Project #: 62393

Time Period	Northbound			Southbound		
	Left	Through	Right	Left	Through	Right
7:00 - 7:15	0	0	0	0	0	0
7:15 - 7:30	0	0	0	0	0	0
7:30 - 7:45	0	0	0	0	0	0
7:45 - 8:00	0	0	0	0	0	0
8:00 - 8:15	0	0	0	0	0	0
8:15 - 8:30	0	0	0	0	0	0
8:30 - 8:45	0	0	0	0	0	0
8:45 - 9:00	0	0	0	0	0	0

Time Period	Eastbound			Westbound		
	Left	Through	Right	Left	Through	Right
7:00 - 7:15	0	0	0	0	0	0
7:15 - 7:30	0	0	0	0	0	0
7:30 - 7:45	0	0	0	0	0	0
7:45 - 8:00	0	0	0	0	0	0
8:00 - 8:15	0	0	0	0	0	0
8:15 - 8:30	0	0	0	0	0	0
8:30 - 8:45	0	0	0	0	0	0
8:45 - 9:00	0	0	0	0	0	0

North / South
Belle Terre Blvd

East / West
Zonal Geranium Trail (N)

Peak Hour
7:00 - 8:00

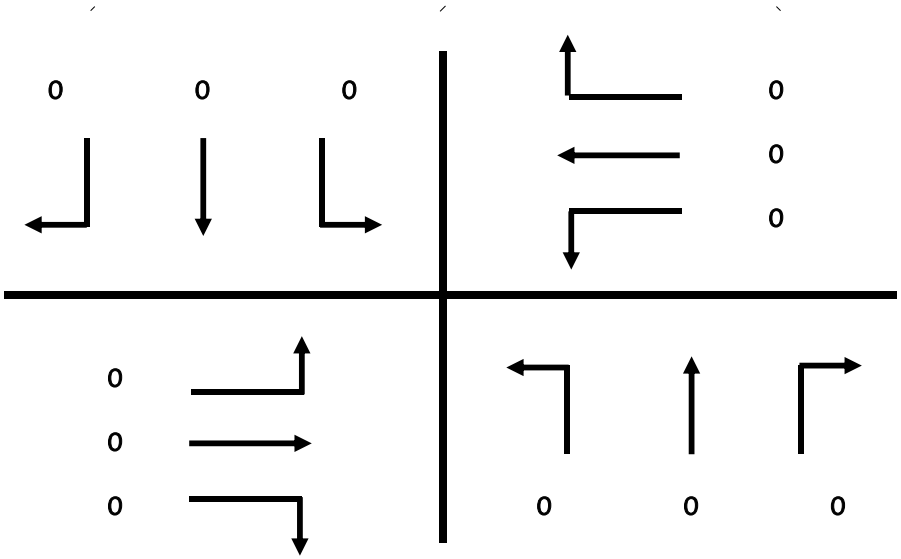

Roadway Count Summary

Vanasse Hangen Brustlin, Inc.

County	Flagler	**City**	Palm Coast
Intersection	Belle Terre Blvd		& Zonal Geranium Trail (N)
Date	September 1, 2015		**All Vehicles**
Time Period	16:00 to 18:00		

VHB Project #: 62393

Time Period	Northbound Left	Northbound Through	Northbound Right	Southbound Left	Southbound Through	Southbound Right
16:00 - 16:15	2	38	0	0	32	8
16:15 - 16:30	1	45	0	0	30	3
16:30 - 16:45	2	53	0	0	41	6
16:45 - 17:00	3	56	0	0	33	7
17:00 - 17:15	0	43	0	0	37	5
17:15 - 17:30	1	49	0	0	38	4
17:30 - 17:45	4	46	0	0	38	0
17:45 - 18:00	0	56	0	0	43	6
	13	386	0	0	292	39

Time Period	Eastbound Left	Eastbound Through	Eastbound Right	Westbound Left	Westbound Through	Westbound Right
16:00 - 16:15	6	0	1	0	0	0
16:15 - 16:30	2	0	0	0	0	0
16:30 - 16:45	2	0	3	0	0	0
16:45 - 17:00	5	0	0	0	0	0
17:00 - 17:15	7	0	0	0	0	0
17:15 - 17:30	1	0	1	0	0	0
17:30 - 17:45	3	0	0	0	0	0
17:45 - 18:00	2	0	0	0	0	0
	28	0	5	0	0	0

North / South
Belle Terre Blvd

East / West
Zonal Geranium Trail (N)

Peak Hour
16:30 - 17:30

Peak Hour Factor
0.93

Total Pk Hr Voume
397

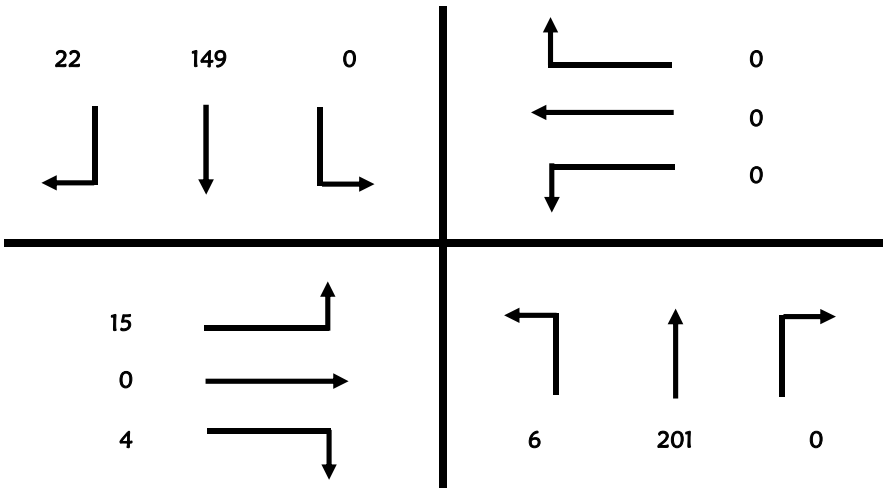

Roadway Count Summary

Vanasse Hangen Brustlin, Inc.

County	Flagler	**City**	Palm Coast
Intersection	Belle Terre Blvd	&	Zonal Geranium Trail (N)
Date	September 1, 2015		
Time Period	16:00 to 18:00		**Trucks**

VHB Project #: 62393

Time Period	Northbound			Southbound		
	Left	Through	Right	Left	Through	Right
16:00 - 16:15	0	2	0	0	0	1
16:15 - 16:30	0	0	0	0	0	0
16:30 - 16:45	0	0	0	0	2	0
16:45 - 17:00	0	0	0	0	0	0
17:00 - 17:15	0	0	0	0	0	0
17:15 - 17:30	0	0	0	0	1	0
17:30 - 17:45	0	0	0	0	1	0
17:45 - 18:00	0	0	0	0	0	0

Time Period	Eastbound			Westbound		
	Left	Through	Right	Left	Through	Right
16:00 - 16:15	0	0	0	0	0	0
16:15 - 16:30	0	0	0	0	0	0
16:30 - 16:45	0	0	0	0	0	0
16:45 - 17:00	0	0	0	0	0	0
17:00 - 17:15	0	0	0	0	0	0
17:15 - 17:30	0	0	0	0	0	0
17:30 - 17:45	0	0	0	0	0	0
17:45 - 18:00	0	0	0	0	0	0

North / South
Belle Terre Blvd

East / West
Zonal Geranium Trail (N)

Peak Hour
16:30 - 17:30

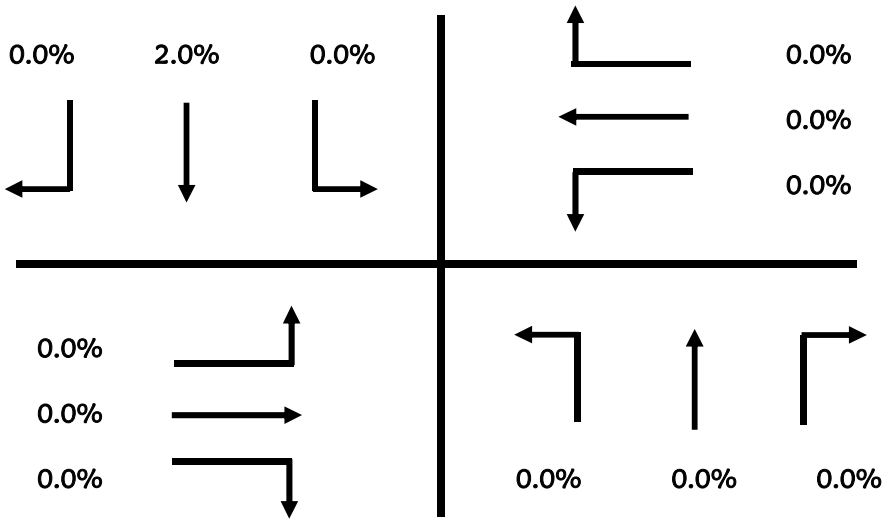

Roadway Count Summary

Vanasse Hangen Brustlin, Inc.

County	Flagler	**City**	Palm Coast
Intersection	Belle Terre Blvd	&	Zonal Geranium Trail (N)
Date	September 1, 2015		
Time Period	16:00 to 18:00		**U-Turn & RTOR**

VHB Project #: 62393

Time Period	Northbound			Southbound		
	Left	Through	Right	Left	Through	Right
16:00 - 16:15	0	0	0	0	0	0
16:15 - 16:30	0	0	0	0	0	0
16:30 - 16:45	0	0	0	0	0	0
16:45 - 17:00	0	0	0	0	0	0
17:00 - 17:15	0	0	0	0	0	0
17:15 - 17:30	0	0	0	0	0	0
17:30 - 17:45	0	0	0	0	0	0
17:45 - 18:00	0	0	0	0	0	0

Time Period	Eastbound			Westbound		
	Left	Through	Right	Left	Through	Right
16:00 - 16:15	0	0	0	0	0	0
16:15 - 16:30	0	0	0	0	0	0
16:30 - 16:45	0	0	0	0	0	0
16:45 - 17:00	0	0	0	0	0	0
17:00 - 17:15	0	0	0	0	0	0
17:15 - 17:30	0	0	0	0	0	0
17:30 - 17:45	0	0	0	0	0	0
17:45 - 18:00	0	0	0	0	0	0

North / South
Belle Terre Blvd

East / West
Zonal Geranium Trail (N)

Peak Hour
16:30 - 17:30

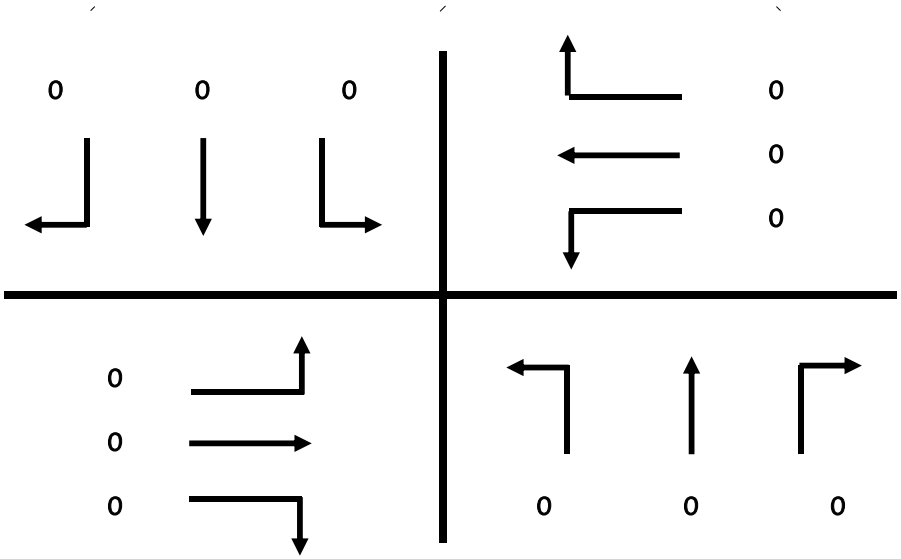

Pedestrian & Bicycle Summary

Project #: 62393
Date: 9/1/2015

NB/SB: Belle Terre Blvd
EB/WB: Zonal Geranium Trail (N)

Hour

		7:00 (1)	8:00 (2)	(3)	16:00 (4)	17:00 (5)	(6)	(7)	(8)	
Eastbound ▶	Bike	0	0		0	0				**0**
	Ped	1	0		0	0				**1**
Westbound ◀	Bike	0	0		0	0				**0**
	Ped	1	0		0	0				**1**

	Hour	Southbound Ped ▼	Southbound Bike ▼	Northbound Ped ▲	Northbound Bike ▲
1	7:00	2	0	2	0
2	8:00	0	0	0	1
3					
4	16:00	0	1	0	1
5	17:00	0	1	0	0
6					
7					
8					
		2	**2**	**2**	**2**

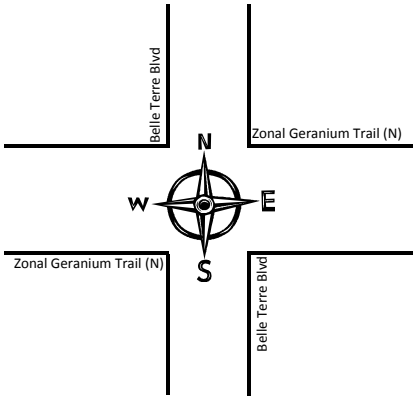

	Southbound Ped ▼	Southbound Bike ▼	Northbound Ped ▲	Northbound Bike ▲	Hour
1	0	0	0	0	7:00
2	0	0	0	0	8:00
3					
4	0	0	0	0	16:00
5	0	0	0	0	17:00
6					
7					
8					
	0	**0**	**0**	**0**	

		7:00 (1)	8:00 (2)	(3)	16:00 (4)	17:00 (5)	(6)	(7)	(8)	
Eastbound ▶	Bike	0	2		0	0				**2**
	Ped	0	0		0	0				**0**
Westbound ◀	Bike	0	0		0	0				**0**
	Ped	0	0		0	0				**0**

Hour

Roadway Count Summary

Vanasse Hangen Brustlin, Inc.

County	Flagler	**City**	Palm Coast
Intersection	Belle Terre Blvd	&	Laguna Forest Trail
Date	September 1, 2015		**All Vehicles**
Time Period	7:00 to 9:00		

VHB Project #: 62393

Time Period	Northbound Left	Northbound Through	Northbound Right	Southbound Left	Southbound Through	Southbound Right
7:00 - 7:15	0	31	0	2	40	0
7:15 - 7:30	0	34	1	4	39	0
7:30 - 7:45	0	44	0	5	52	0
7:45 - 8:00	0	41	1	3	43	0
8:00 - 8:15	0	31	1	6	35	0
8:15 - 8:30	0	42	2	3	33	0
8:30 - 8:45	0	35	0	3	44	0
8:45 - 9:00	0	31	1	5	49	0
	0	289	6	31	335	0

Time Period	Eastbound Left	Eastbound Through	Eastbound Right	Westbound Left	Westbound Through	Westbound Right
7:00 - 7:15	0	0	0	2	0	6
7:15 - 7:30	0	0	0	3	0	15
7:30 - 7:45	0	0	0	8	0	23
7:45 - 8:00	0	0	0	1	0	13
8:00 - 8:15	0	0	0	2	0	12
8:15 - 8:30	0	0	0	4	0	14
8:30 - 8:45	0	0	0	2	0	14
8:45 - 9:00	0	0	0	2	0	11
	0	0	0	24	0	108

North / South
Belle Terre Blvd

East / West
Laguna Forest Trail

Peak Hour
7:30 - 8:30

Peak Hour Factor
0.79

Total Pk Hr Voume
419

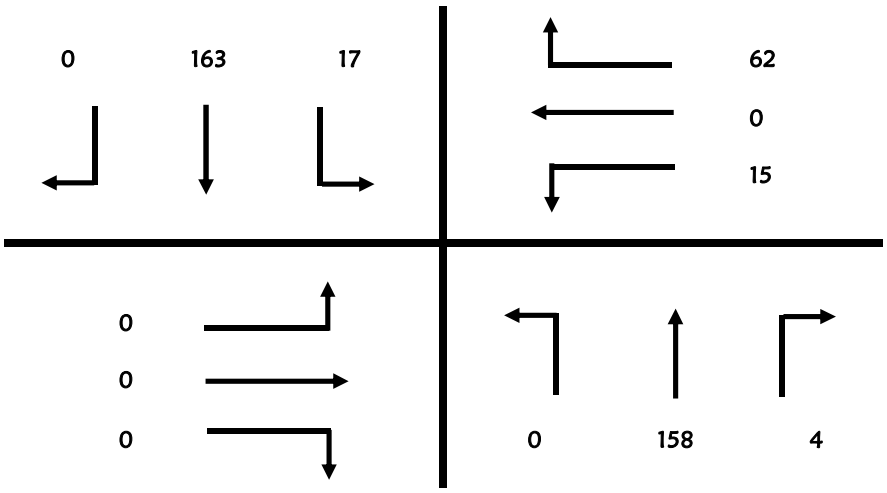

Roadway Count Summary

Vanasse Hangen Brustlin, Inc.

County	Flagler	**City**	Palm Coast
Intersection	Belle Terre Blvd	&	Laguna Forest Trail
Date	September 1, 2015		
Time Period	7:00 to 9:00		**Trucks**

VHB Project #: 62393

Time Period	Northbound			Southbound		
	Left	Through	Right	Left	Through	Right
7:00 - 7:15	0	1	0	0	3	0
7:15 - 7:30	0	2	0	0	1	0
7:30 - 7:45	0	2	0	0	1	0
7:45 - 8:00	0	1	0	0	1	0
8:00 - 8:15	0	1	0	0	4	0
8:15 - 8:30	0	1	0	0	1	0
8:30 - 8:45	0	1	0	0	1	0
8:45 - 9:00	0	1	0	0	2	0

Time Period	Eastbound			Westbound		
	Left	Through	Right	Left	Through	Right
7:00 - 7:15	0	0	0	0	0	1
7:15 - 7:30	0	0	0	0	0	1
7:30 - 7:45	0	0	0	0	0	1
7:45 - 8:00	0	0	0	0	0	0
8:00 - 8:15	0	0	0	0	0	0
8:15 - 8:30	0	0	0	1	0	2
8:30 - 8:45	0	0	0	0	0	0
8:45 - 9:00	0	0	0	0	0	0

North / South
Belle Terre Blvd

East / West
Laguna Forest Trail

Peak Hour
7:30 - 8:30

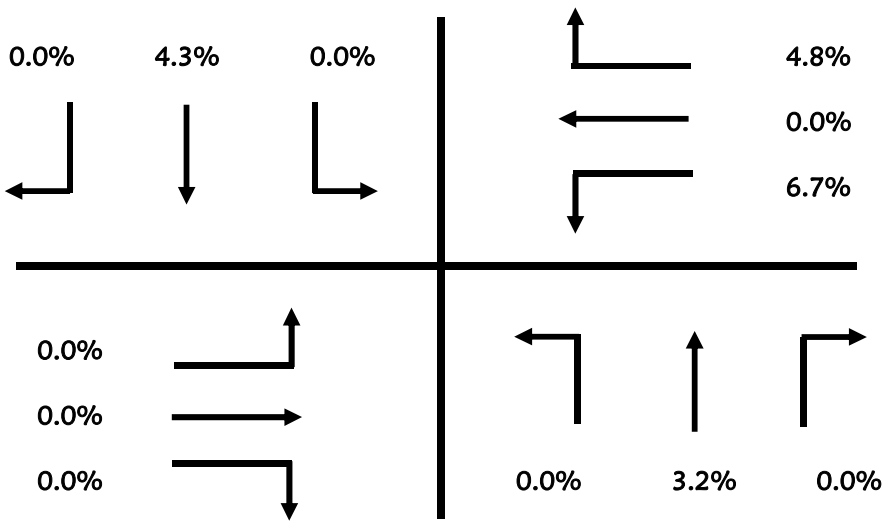

Roadway Count Summary

Vanasse Hangen Brustlin, Inc.

County	Flagler	**City**	Palm Coast
Intersection	Belle Terre Blvd	&	Laguna Forest Trail
Date	September 1, 2015		
Time Period	7:00 to 9:00		**U-Turn & RTOR**

VHB Project #: 62393

Time Period	Northbound			Southbound		
	Left	Through	Right	Left	Through	Right
7:00 - 7:15	0	0	0	0	0	0
7:15 - 7:30	0	0	0	0	0	0
7:30 - 7:45	0	0	0	0	0	0
7:45 - 8:00	0	0	0	0	0	0
8:00 - 8:15	0	0	0	0	0	0
8:15 - 8:30	0	0	0	0	0	0
8:30 - 8:45	0	0	0	0	0	0
8:45 - 9:00	0	0	0	0	0	0

Time Period	Eastbound			Westbound		
	Left	Through	Right	Left	Through	Right
7:00 - 7:15	0	0	0	0	0	0
7:15 - 7:30	0	0	0	0	0	0
7:30 - 7:45	0	0	0	0	0	0
7:45 - 8:00	0	0	0	0	0	0
8:00 - 8:15	0	0	0	0	0	0
8:15 - 8:30	0	0	0	0	0	0
8:30 - 8:45	0	0	0	0	0	0
8:45 - 9:00	0	0	0	0	0	0

North / South
Belle Terre Blvd

East / West
Laguna Forest Trail

Peak Hour
7:30 - 8:30

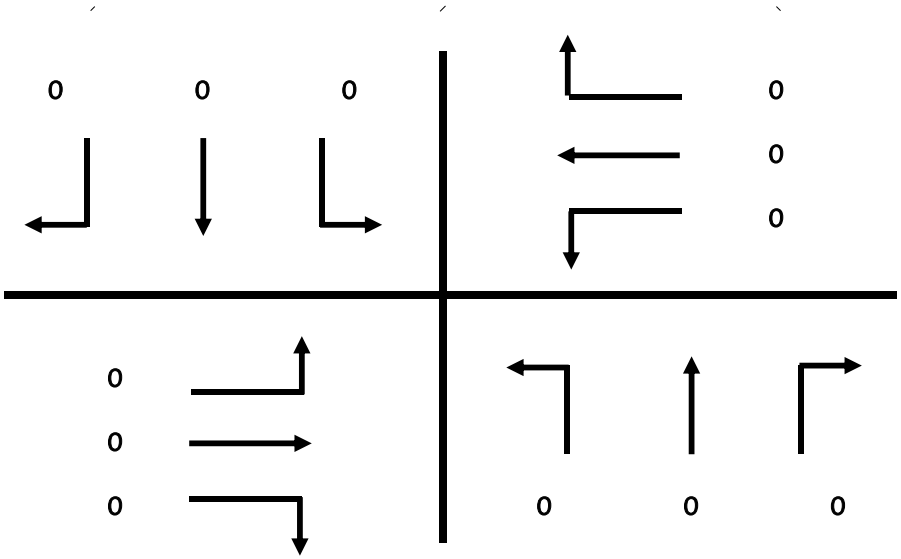

Roadway Count Summary

Vanasse Hangen Brustlin, Inc.

County	Flagler	**City**	Palm Coast
Intersection	Belle Terre Blvd	&	Laguna Forest Trail
Date	September 1, 2015		**All Vehicles**
Time Period	16:00 to 18:00		

VHB Project #: 62393

Time Period	Northbound Left	Northbound Through	Northbound Right	Southbound Left	Southbound Through	Southbound Right
16:00 - 16:15	0	42	2	13	38	0
16:15 - 16:30	0	47	0	12	35	0
16:30 - 16:45	0	54	1	12	44	0
16:45 - 17:00	0	61	0	15	39	0
17:00 - 17:15	0	49	1	11	41	0
17:15 - 17:30	0	47	3	14	40	0
17:30 - 17:45	0	49	0	13	36	0
17:45 - 18:00	0	54	4	10	47	0
	0	403	11	100	320	0

Time Period	Eastbound Left	Eastbound Through	Eastbound Right	Westbound Left	Westbound Through	Westbound Right
16:00 - 16:15	0	0	0	1	0	3
16:15 - 16:30	0	0	0	1	0	7
16:30 - 16:45	0	0	0	0	0	6
16:45 - 17:00	0	0	0	2	0	8
17:00 - 17:15	0	0	0	1	0	7
17:15 - 17:30	0	0	0	2	0	10
17:30 - 17:45	0	0	0	2	0	6
17:45 - 18:00	0	0	0	2	0	9
	0	0	0	11	0	56

North / South
Belle Terre Blvd

East / West
Laguna Forest Trail

Peak Hour
16:30 - 17:30

Peak Hour Factor
0.94

Total Pk Hr Voume
468

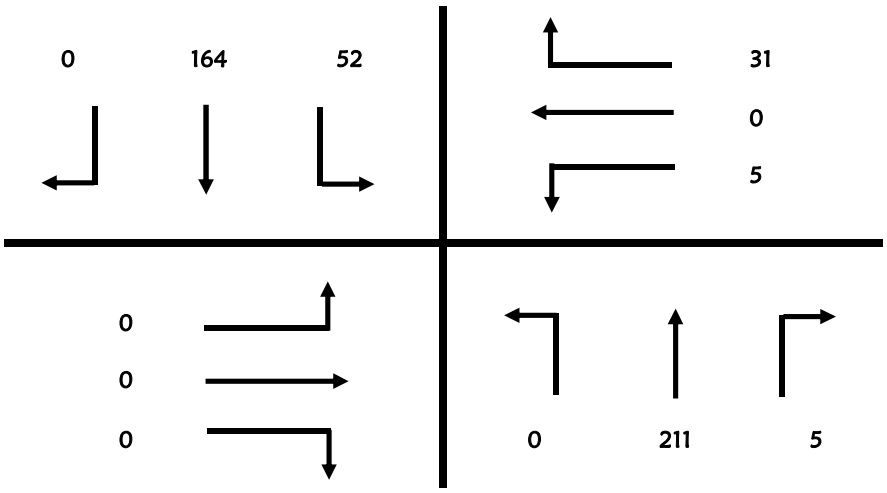

Roadway Count Summary

Vanasse Hangen Brustlin, Inc.

County	Flagler	**City**	Palm Coast
Intersection	Belle Terre Blvd	&	Laguna Forest Trail
Date	September 1, 2015		
Time Period	16:00 to 18:00		**Trucks**

VHB Project #: 62393

Time Period	Northbound			Southbound		
	Left	Through	Right	Left	Through	Right
16:00 - 16:15	0	2	0	1	1	0
16:15 - 16:30	0	0	0	0	0	0
16:30 - 16:45	0	0	0	0	2	0
16:45 - 17:00	0	0	0	0	0	0
17:00 - 17:15	0	0	0	0	0	0
17:15 - 17:30	0	0	0	0	1	0
17:30 - 17:45	0	0	0	1	1	0
17:45 - 18:00	0	0	0	0	0	0

Time Period	Eastbound			Westbound		
	Left	Through	Right	Left	Through	Right
16:00 - 16:15	0	0	0	0	0	0
16:15 - 16:30	0	0	0	0	0	2
16:30 - 16:45	0	0	0	0	0	0
16:45 - 17:00	0	0	0	0	0	0
17:00 - 17:15	0	0	0	0	0	0
17:15 - 17:30	0	0	0	0	0	0
17:30 - 17:45	0	0	0	0	0	0
17:45 - 18:00	0	0	0	0	0	0

North / South
Belle Terre Blvd

East / West
Laguna Forest Trail

Peak Hour
16:30 - 17:30

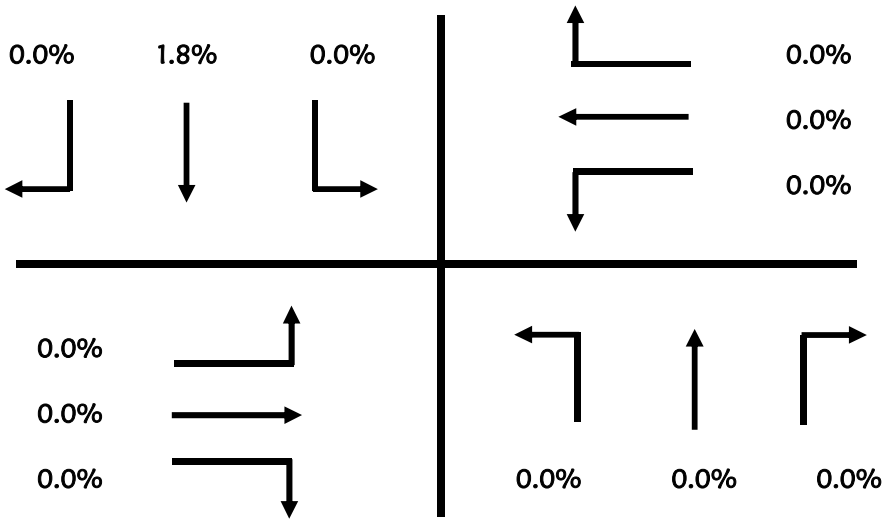

Roadway Count Summary

Vanasse Hangen Brustlin, Inc.

County	Flagler	**City**	Palm Coast
Intersection	Belle Terre Blvd	&	Laguna Forest Trail
Date	September 1, 2015		
Time Period	16:00 to 18:00		**U-Turn & RTOR**

VHB Project #: 62393

Time Period	Northbound Left	Northbound Through	Northbound Right	Southbound Left	Southbound Through	Southbound Right
16:00 - 16:15	0	0	0	0	0	0
16:15 - 16:30	0	0	0	0	0	0
16:30 - 16:45	0	0	0	0	0	0
16:45 - 17:00	0	0	0	0	0	0
17:00 - 17:15	0	0	0	0	0	0
17:15 - 17:30	0	0	0	0	0	0
17:30 - 17:45	0	0	0	0	0	0
17:45 - 18:00	0	0	0	0	0	0

Time Period	Eastbound Left	Eastbound Through	Eastbound Right	Westbound Left	Westbound Through	Westbound Right
16:00 - 16:15	0	0	0	0	0	0
16:15 - 16:30	0	0	0	0	0	0
16:30 - 16:45	0	0	0	0	0	0
16:45 - 17:00	0	0	0	0	0	0
17:00 - 17:15	0	0	0	0	0	0
17:15 - 17:30	0	0	0	0	0	0
17:30 - 17:45	0	0	0	0	0	0
17:45 - 18:00	0	0	0	0	0	0

North / South
Belle Terre Blvd

East / West
Laguna Forest Trail

Peak Hour
16:30 - 17:30

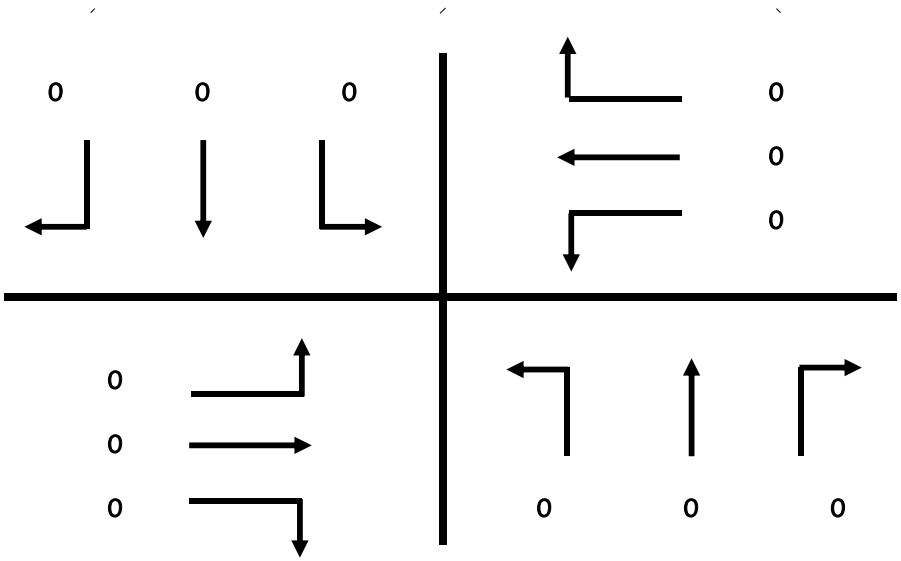

Pedestrian & Bicycle Summary

Project #: 62393 **NB/SB:** Belle Terre Blvd

Date: 9/1/2015 **EB/WB:** Laguna Forest Trail

Hour

		7:00	8:00		16:00	17:00				
		1	2	3	4	5	6	7	8	
Eastbound ▶	Bike	0	0		0	0				**0**
	Ped	0	0		0	0				**0**
Westbound ◀	Bike	0	0		0	0				**0**
	Ped	1	0		0	0				**1**

Hour	Southbound Ped ▼	Southbound Bike ▼	Northbound Ped ▲	Northbound Bike ▲
1 7:00	0	0	0	0
2 8:00	0	0	0	0
3				
4 16:00	0	0	0	0
5 17:00	0	0	0	0
6				
7				
8				
	0	**0**	**0**	**0**

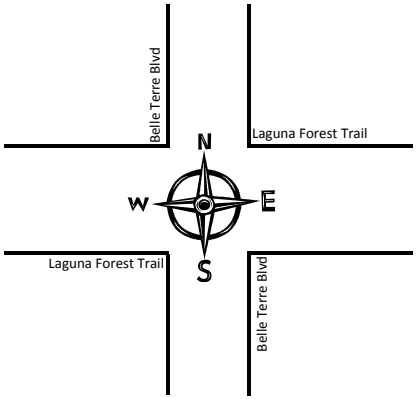

Hour	Southbound Ped ▼	Southbound Bike ▼	Northbound Ped ▲	Northbound Bike ▲
1 7:00	0	0	0	0
2 8:00	0	0	0	2
3				
4 16:00	0	0	0	0
5 17:00	0	0	0	0
6				
7				
8				
	0	**0**	**0**	**2**

		7:00	8:00		16:00	17:00				
		1	2	3	4	5	6	7	8	
Eastbound ▶	Bike	0	2		0	0				**2**
	Ped	1	0		0	0				**1**
Westbound ◀	Bike	0	0		0	0				**0**
	Ped	0	0		0	0				**0**

Hour

Roadway Count Summary

Vanasse Hangen Brustlin, Inc.

County	Flagler	**City**	Palm Coast
Intersection	Belle Terre Blvd		& Zinnia Trail (S)
Date	September 1, 2015		**All Vehicles**
Time Period	7:00 to 9:00		

VHB Project #: 62393

Time Period	Northbound Left	Northbound Through	Northbound Right	Southbound Left	Southbound Through	Southbound Right
7:00 - 7:15	0	41	0	0	37	2
7:15 - 7:30	0	48	0	0	44	1
7:30 - 7:45	0	63	0	0	54	0
7:45 - 8:00	0	57	0	0	45	1
8:00 - 8:15	0	42	0	0	40	5
8:15 - 8:30	3	57	0	0	31	2
8:30 - 8:45	0	48	0	0	46	2
8:45 - 9:00	1	40	0	0	52	0
	4	396	0	0	349	13

Time Period	Eastbound Left	Eastbound Through	Eastbound Right	Westbound Left	Westbound Through	Westbound Right
7:00 - 7:15	7	0	1	0	0	0
7:15 - 7:30	6	0	0	0	0	0
7:30 - 7:45	6	0	5	0	0	0
7:45 - 8:00	8	0	0	0	0	0
8:00 - 8:15	3	0	2	0	0	0
8:15 - 8:30	1	0	3	0	0	0
8:30 - 8:45	6	0	1	0	0	0
8:45 - 9:00	2	0	1	0	0	0
	39	0	13	0	0	0

North / South
Belle Terre Blvd

East / West
Zinnia Trail (S)

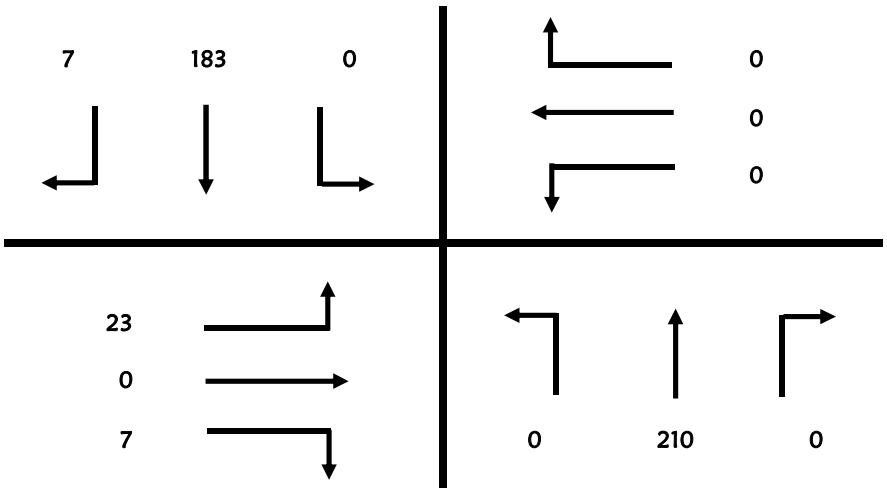

Peak Hour
7:15 - 8:15

Peak Hour Factor
0.84

Total Pk Hr Voume
430

Roadway Count Summary

Vanasse Hangen Brustlin, Inc.

County	Flagler	**City**	Palm Coast
Intersection	Belle Terre Blvd	&	Zinnia Trail (S)
Date	September 1, 2015		
Time Period	7:00 to 9:00		**Trucks**

VHB Project #: 62393

Time Period	Northbound			Southbound		
	Left	Through	Right	Left	Through	Right
7:00 - 7:15	0	2	0	0	2	0
7:15 - 7:30	0	3	0	0	0	0
7:30 - 7:45	0	4	0	0	1	0
7:45 - 8:00	0	1	0	0	0	0
8:00 - 8:15	0	1	0	0	4	1
8:15 - 8:30	0	3	0	0	0	0
8:30 - 8:45	0	2	0	0	1	0
8:45 - 9:00	0	0	0	0	0	0

Time Period	Eastbound			Westbound		
	Left	Through	Right	Left	Through	Right
7:00 - 7:15	0	0	1	0	0	0
7:15 - 7:30	0	0	0	0	0	0
7:30 - 7:45	0	0	0	0	0	0
7:45 - 8:00	0	0	0	0	0	0
8:00 - 8:15	0	0	0	0	0	0
8:15 - 8:30	0	0	1	0	0	0
8:30 - 8:45	0	0	0	0	0	0
8:45 - 9:00	0	0	1	0	0	0

North / South
Belle Terre Blvd

East / West
Zinnia Trail (S)

Peak Hour
7:15 - 8:15

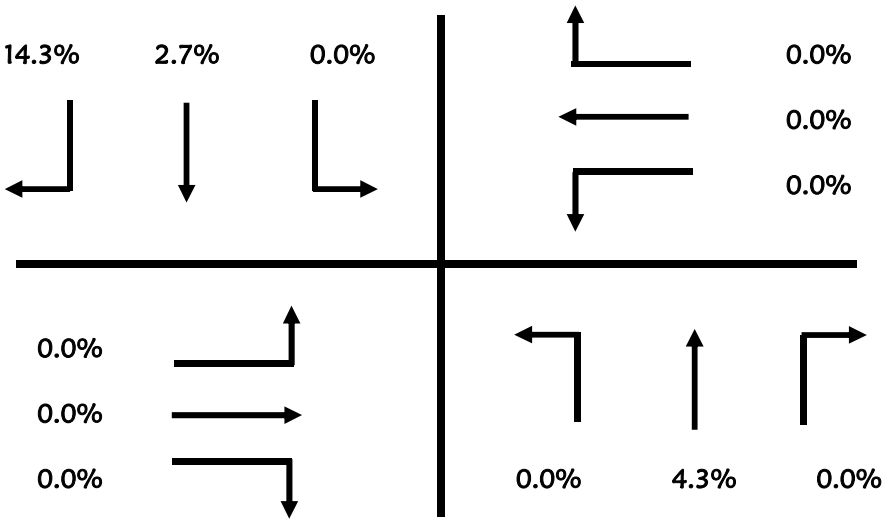

Roadway Count Summary

Vanasse Hangen Brustlin, Inc.

County	Flagler	**City**	Palm Coast
Intersection	Belle Terre Blvd	&	Zinnia Trail (S)
Date	September 1, 2015		
Time Period	7:00 to 9:00		**U-Turn & RTOR**

VHB Project #: 62393

Time Period	Northbound Left	Northbound Through	Northbound Right	Southbound Left	Southbound Through	Southbound Right
7:00 - 7:15	0	0	0	0	0	0
7:15 - 7:30	0	0	0	0	0	0
7:30 - 7:45	0	0	0	0	0	0
7:45 - 8:00	0	0	0	0	0	0
8:00 - 8:15	0	0	0	0	0	0
8:15 - 8:30	0	0	0	0	0	0
8:30 - 8:45	0	0	0	0	0	0
8:45 - 9:00	0	0	0	0	0	0

Time Period	Eastbound Left	Eastbound Through	Eastbound Right	Westbound Left	Westbound Through	Westbound Right
7:00 - 7:15	0	0	0	0	0	0
7:15 - 7:30	0	0	0	0	0	0
7:30 - 7:45	0	0	0	0	0	0
7:45 - 8:00	0	0	0	0	0	0
8:00 - 8:15	0	0	0	0	0	0
8:15 - 8:30	0	0	0	0	0	0
8:30 - 8:45	0	0	0	0	0	0
8:45 - 9:00	0	0	0	0	0	0

North / South
Belle Terre Blvd

East / West
Zinnia Trail (S)

Peak Hour
7:15 - 8:15

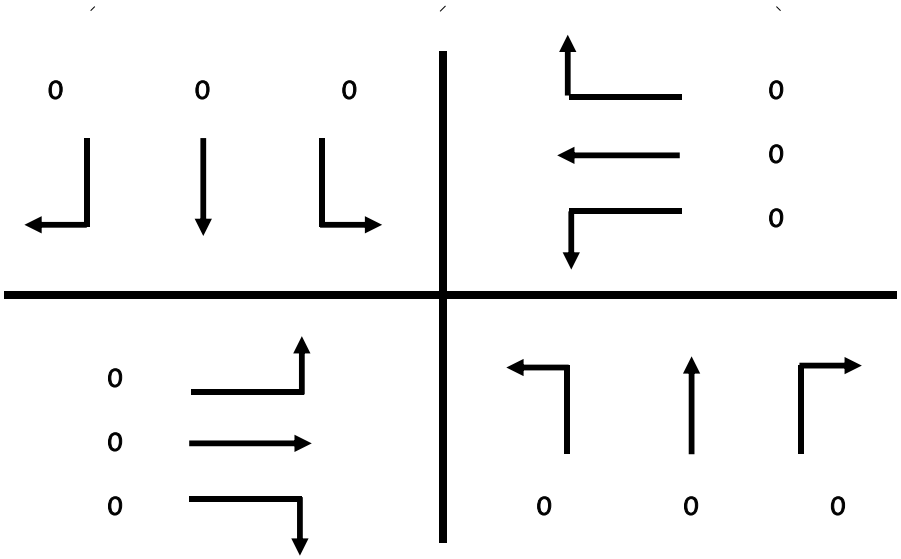

Roadway Count Summary

Vanasse Hangen Brustlin, Inc.

County	Flagler	**City**	Palm Coast
Intersection	Belle Terre Blvd		& Zinnia Trail (S)
Date	September 1, 2015		**All Vehicles**
Time Period	16:00 to 18:00		

VHB Project #: 62393

Time Period	Northbound Left	Northbound Through	Northbound Right	Southbound Left	Southbound Through	Southbound Right
16:00 - 16:15	2	40	0	0	48	6
16:15 - 16:30	3	51	0	0	46	6
16:30 - 16:45	1	57	0	0	60	3
16:45 - 17:00	1	71	0	0	49	5
17:00 - 17:15	2	52	0	0	47	4
17:15 - 17:30	1	54	0	0	54	5
17:30 - 17:45	3	52	0	0	48	5
17:45 - 18:00	2	64	0	0	56	4
	15	441	0	0	408	38

Time Period	Eastbound Left	Eastbound Through	Eastbound Right	Westbound Left	Westbound Through	Westbound Right
16:00 - 16:15	1	0	1	0	0	0
16:15 - 16:30	4	0	1	0	0	0
16:30 - 16:45	1	0	2	0	0	0
16:45 - 17:00	5	0	1	0	0	0
17:00 - 17:15	3	0	2	0	0	0
17:15 - 17:30	4	0	3	0	0	0
17:30 - 17:45	5	0	0	0	0	0
17:45 - 18:00	4	0	0	0	0	0
	27	0	10	0	0	0

North / South
Belle Terre Blvd

East / West
Zinnia Trail (S)

Peak Hour
16:30 - 17:30

Peak Hour Factor
0.92

Total Pk Hr Voume
487

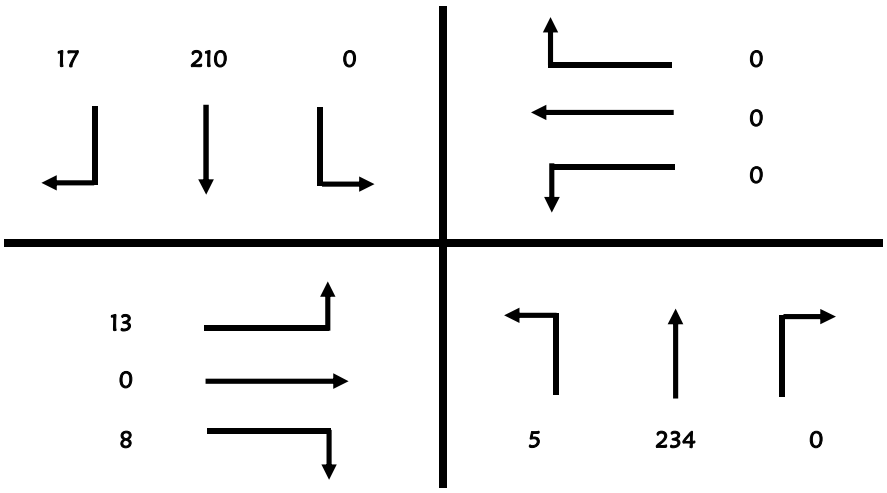

Roadway Count Summary

Vanasse Hangen Brustlin, Inc.

County	Flagler	**City**	Palm Coast
Intersection	Belle Terre Blvd	&	Zinnia Trail (S)
Date	September 1, 2015		
Time Period	16:00 to 18:00		**Trucks**

VHB Project #: 62393

Time Period	Northbound			Southbound		
	Left	Through	Right	Left	Through	Right
16:00 - 16:15	0	2	0	0	0	0
16:15 - 16:30	0	1	0	0	0	0
16:30 - 16:45	0	0	0	0	2	0
16:45 - 17:00	0	0	0	0	0	0
17:00 - 17:15	0	0	0	0	0	0
17:15 - 17:30	0	0	0	0	1	0
17:30 - 17:45	0	0	0	0	2	0
17:45 - 18:00	0	0	0	0	0	0

Time Period	Eastbound			Westbound		
	Left	Through	Right	Left	Through	Right
16:00 - 16:15	0	0	1	0	0	0
16:15 - 16:30	0	0	0	0	0	0
16:30 - 16:45	0	0	0	0	0	0
16:45 - 17:00	0	0	0	0	0	0
17:00 - 17:15	0	0	0	0	0	0
17:15 - 17:30	0	0	0	0	0	0
17:30 - 17:45	0	0	0	0	0	0
17:45 - 18:00	0	0	0	0	0	0

North / South
Belle Terre Blvd

East / West
Zinnia Trail (S)

Peak Hour
16:30 - 17:30

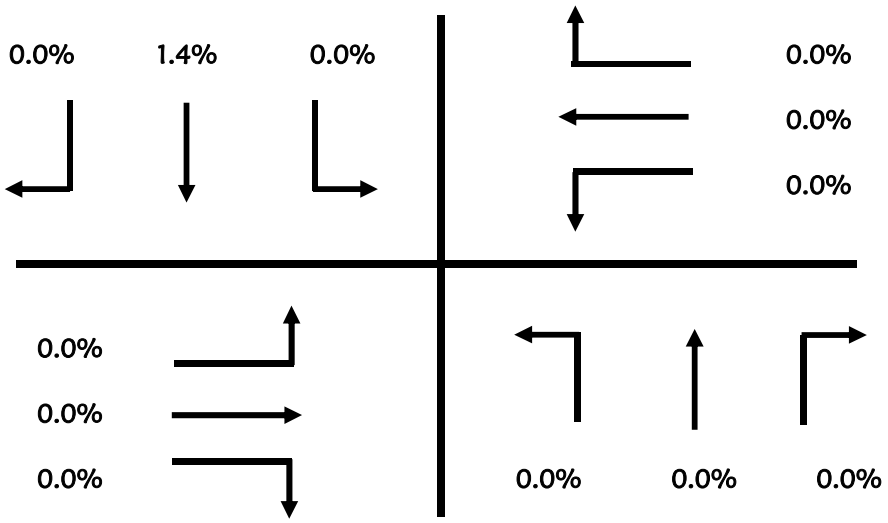

Roadway Count Summary

Vanasse Hangen Brustlin, Inc.

County	Flagler	**City**	Palm Coast
Intersection	Belle Terre Blvd	&	Zinnia Trail (S)
Date	September 1, 2015		
Time Period	16:00 to 18:00		**U-Turn & RTOR**

VHB Project #: 62393

Time Period	Northbound Left	Northbound Through	Northbound Right	Southbound Left	Southbound Through	Southbound Right
16:00 - 16:15	0	0	0	0	0	0
16:15 - 16:30	0	0	0	0	0	0
16:30 - 16:45	0	0	0	0	0	0
16:45 - 17:00	0	0	0	0	0	0
17:00 - 17:15	0	0	0	0	0	0
17:15 - 17:30	0	0	0	0	0	0
17:30 - 17:45	0	0	0	0	0	0
17:45 - 18:00	0	0	0	0	0	0

Time Period	Eastbound Left	Eastbound Through	Eastbound Right	Westbound Left	Westbound Through	Westbound Right
16:00 - 16:15	0	0	0	0	0	0
16:15 - 16:30	0	0	0	0	0	0
16:30 - 16:45	0	0	0	0	0	0
16:45 - 17:00	0	0	0	0	0	0
17:00 - 17:15	0	0	0	0	0	0
17:15 - 17:30	0	0	0	0	0	0
17:30 - 17:45	0	0	0	0	0	0
17:45 - 18:00	0	0	0	0	0	0

North / South
Belle Terre Blvd

East / West
Zinnia Trail (S)

Peak Hour
16:30 - 17:30

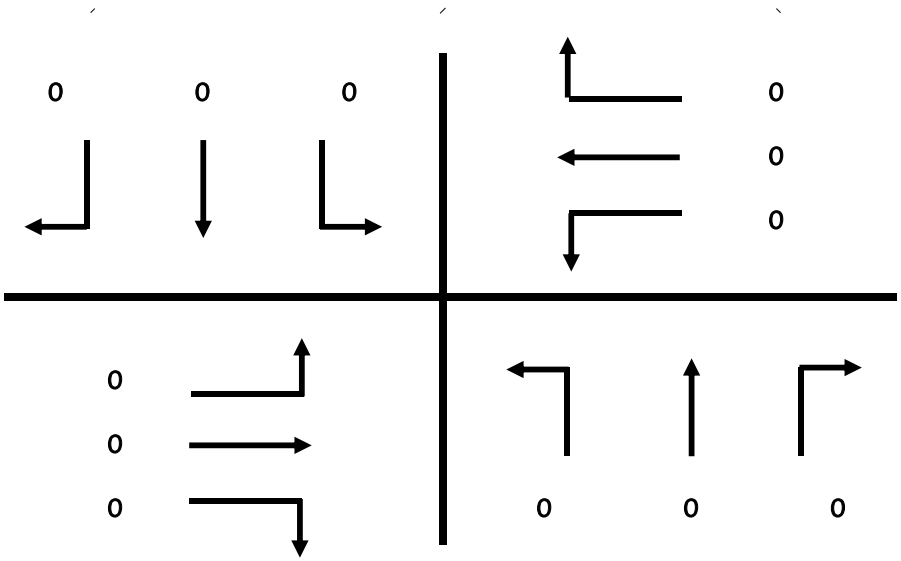

Pedestrian & Bicycle Summary

Project #: 62393 **NB/SB:** Belle Terre Blvd

Date: 9/1/2015 **EB/WB:** Zinnia Trail (S)

Hour

		7:00	8:00		16:00	17:00				
		1	2	3	4	5	6	7	8	
Eastbound ▶	Bike	0	0		0	0				0
	Ped	0	0		0	0				0
Westbound ◀	Bike	0	0		0	0				0
	Ped	0	0		0	0				0

	Hour	Southbound Ped ▼	Southbound Bike	Northbound Ped ▲	Northbound Bike
1	7:00	2	0	2	0
2	8:00	0	0	0	1
3					
4	16:00	0	0	0	0
5	17:00	0	0	0	0
6					
7					
8					
		2	0	2	1

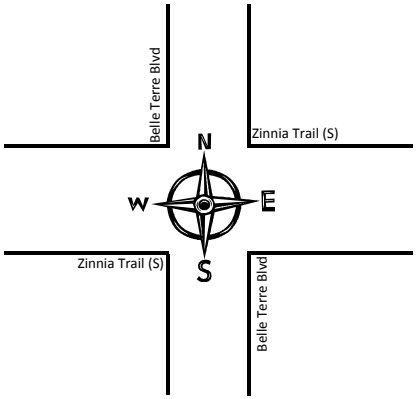

Southbound Ped ▼	Southbound Bike	Northbound Ped ▲	Northbound Bike	Hour
0	0	0	0	7:00
0	0	0	0	8:00
0	0	0	0	16:00
0	0	0	0	17:00
0	0	0	0	

		7:00	8:00		16:00	17:00				
		1	2	3	4	5	6	7	8	
Eastbound ▶	Bike	0	0		0	0				0
	Ped	0	0		0	0				0
Westbound ◀	Bike	0	0		0	0				0
	Ped	0	0		0	0				0

Hour

Roadway Count Summary

Vanasse Hangen Brustlin, Inc.

County	Flagler	**City**	Palm Coast
Intersection	Belle Terre Blvd		& Zinnia Trail (N)
Date	September 1, 2015		**All Vehicles**
Time Period	7:00 to 9:00		

VHB Project #: 62393

Time Period	Northbound Left	Northbound Through	Northbound Right	Southbound Left	Southbound Through	Southbound Right
7:00 - 7:15	2	47	0	0	45	1
7:15 - 7:30	0	52	0	0	40	0
7:30 - 7:45	0	76	0	0	48	0
7:45 - 8:00	0	59	0	0	45	3
8:00 - 8:15	0	46	0	0	53	2
8:15 - 8:30	0	59	0	0	29	3
8:30 - 8:45	0	51	0	0	48	0
8:45 - 9:00	0	43	0	0	44	1
	2	433	0	0	352	10

Time Period	Eastbound Left	Eastbound Through	Eastbound Right	Westbound Left	Westbound Through	Westbound Right
7:00 - 7:15	4	0	2	0	0	0
7:15 - 7:30	2	0	0	0	0	0
7:30 - 7:45	3	0	2	0	0	0
7:45 - 8:00	0	0	0	0	0	0
8:00 - 8:15	4	0	0	0	0	0
8:15 - 8:30	2	0	1	0	0	0
8:30 - 8:45	0	0	0	0	0	0
8:45 - 9:00	0	0	0	0	0	0
	15	0	5	0	0	0

North / South
Belle Terre Blvd

East / West
Zinnia Trail (N)

Peak Hour
7:15 - 8:15

Peak Hour Factor
0.84

Total Pk Hr Voume
435

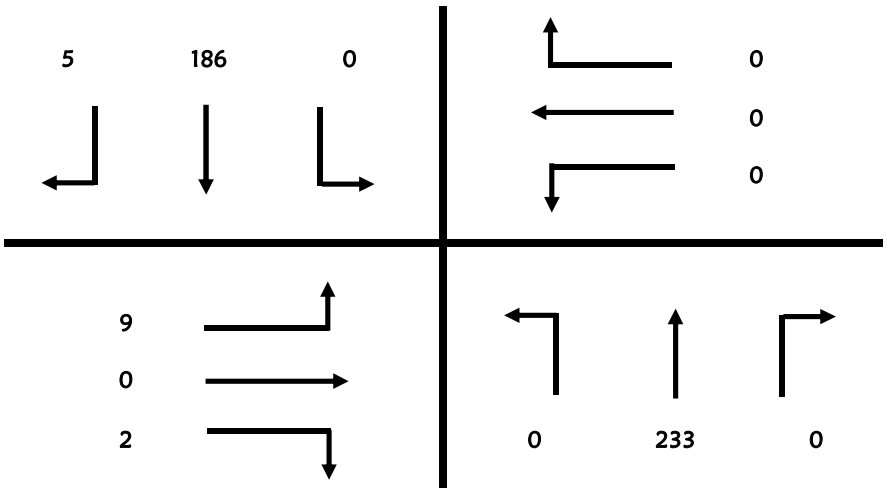

Roadway Count Summary

Vanasse Hangen Brustlin, Inc.

County	Flagler	**City**	Palm Coast
Intersection	Belle Terre Blvd	&	Zinnia Trail (N)
Date	September 1, 2015		
Time Period	7:00 to 9:00		**Trucks**

VHB Project #: 62393

Time Period	Northbound			Southbound		
	Left	Through	Right	Left	Through	Right
7:00 - 7:15	0	3	0	0	2	1
7:15 - 7:30	0	3	0	0	0	0
7:30 - 7:45	0	3	0	0	2	0
7:45 - 8:00	0	1	0	0	2	1
8:00 - 8:15	0	1	0	0	5	1
8:15 - 8:30	0	3	0	0	2	0
8:30 - 8:45	0	4	0	0	2	0
8:45 - 9:00	0	2	0	0	1	0

Time Period	Eastbound			Westbound		
	Left	Through	Right	Left	Through	Right
7:00 - 7:15	1	0	0	0	0	0
7:15 - 7:30	0	0	0	0	0	0
7:30 - 7:45	0	0	0	0	0	0
7:45 - 8:00	0	0	0	0	0	0
8:00 - 8:15	0	0	0	0	0	0
8:15 - 8:30	1	0	0	0	0	0
8:30 - 8:45	0	0	0	0	0	0
8:45 - 9:00	0	0	0	0	0	0

North / South
Belle Terre Blvd

East / West
Zinnia Trail (N)

Peak Hour
7:15 - 8:15

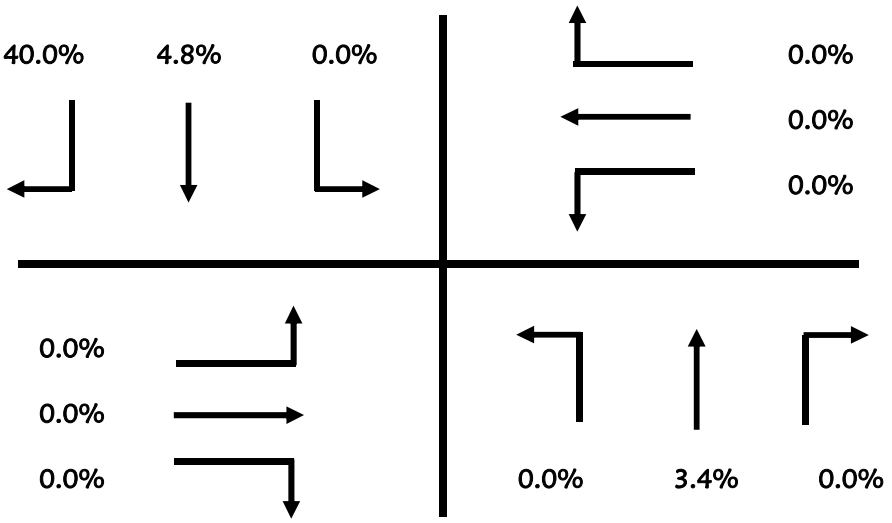

Roadway Count Summary

Vanasse Hangen Brustlin, Inc.

County	Flagler	**City**	Palm Coast
Intersection	Belle Terre Blvd	&	Zinnia Trail (N)
Date	September 1, 2015		
Time Period	7:00 to 9:00		**U-Turn & RTOR**

VHB Project #: 62393

Time Period	Northbound Left	Northbound Through	Northbound Right	Southbound Left	Southbound Through	Southbound Right
7:00 - 7:15	0	0	0	0	0	0
7:15 - 7:30	0	0	0	0	0	0
7:30 - 7:45	0	0	0	0	0	0
7:45 - 8:00	0	0	0	0	0	0
8:00 - 8:15	0	0	0	0	0	0
8:15 - 8:30	0	0	0	0	0	0
8:30 - 8:45	0	0	0	0	0	0
8:45 - 9:00	0	0	0	0	0	0

Time Period	Eastbound Left	Eastbound Through	Eastbound Right	Westbound Left	Westbound Through	Westbound Right
7:00 - 7:15	0	0	0	0	0	0
7:15 - 7:30	0	0	0	0	0	0
7:30 - 7:45	0	0	0	0	0	0
7:45 - 8:00	0	0	0	0	0	0
8:00 - 8:15	0	0	0	0	0	0
8:15 - 8:30	0	0	0	0	0	0
8:30 - 8:45	0	0	0	0	0	0
8:45 - 9:00	0	0	0	0	0	0

North / South
Belle Terre Blvd

East / West
Zinnia Trail (N)

Peak Hour
7:15 - 8:15

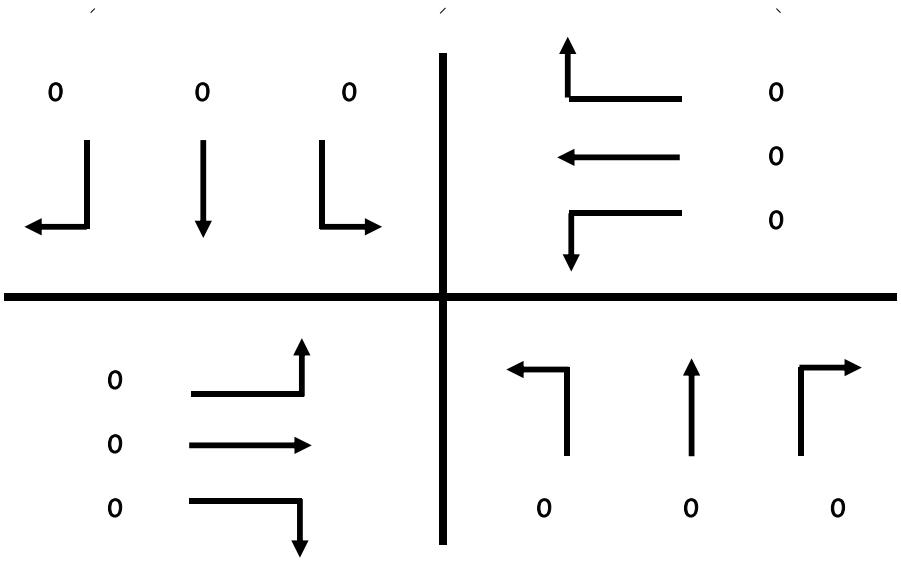

Roadway Count Summary

Vanasse Hangen Brustlin, Inc.

County	Flagler	**City**	Palm Coast
Intersection	Belle Terre Blvd		& Zinnia Trail (N)
Date	September 1, 2015		**All Vehicles**
Time Period	16:00 to 18:00		

VHB Project #: 62393

Time Period	Northbound Left	Northbound Through	Northbound Right	Southbound Left	Southbound Through	Southbound Right
16:00 - 16:15	0	50	0	0	55	1
16:15 - 16:30	0	52	0	0	53	3
16:30 - 16:45	0	54	0	0	63	5
16:45 - 17:00	3	73	0	0	47	1
17:00 - 17:15	2	51	0	0	55	3
17:15 - 17:30	0	65	0	0	61	2
17:30 - 17:45	0	59	0	0	50	3
17:45 - 18:00	2	58	0	0	58	2
	7	462	0	0	442	20

Time Period	Eastbound Left	Eastbound Through	Eastbound Right	Westbound Left	Westbound Through	Westbound Right
16:00 - 16:15	2	0	2	0	0	0
16:15 - 16:30	4	0	1	0	0	0
16:30 - 16:45	0	0	1	0	0	0
16:45 - 17:00	3	0	0	0	0	0
17:00 - 17:15	3	0	1	0	0	0
17:15 - 17:30	0	0	0	0	0	0
17:30 - 17:45	2	0	0	0	0	0
17:45 - 18:00	1	0	0	0	0	0
	15	0	5	0	0	0

North / South
Belle Terre Blvd

East / West
Zinnia Trail (N)

Peak Hour
16:30 - 17:30

Peak Hour Factor
0.96

Total Pk Hr Voume
493

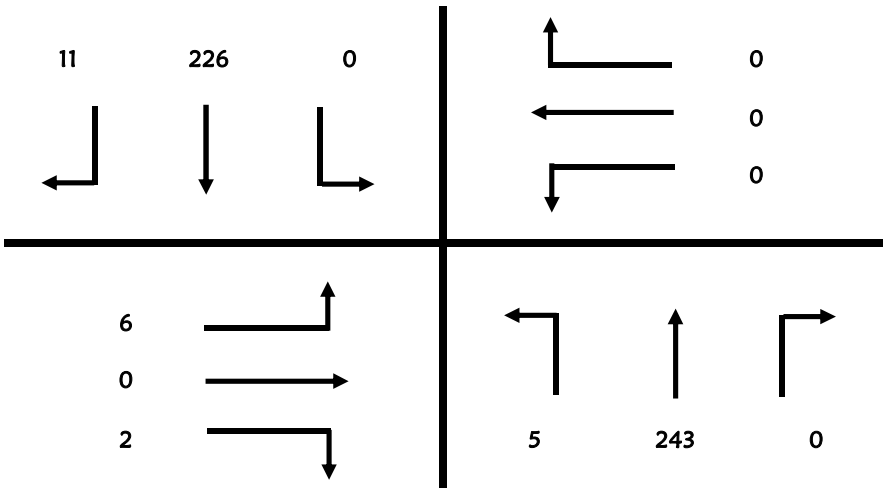

Roadway Count Summary

Vanasse Hangen Brustlin, Inc.

County	Flagler	**City**	Palm Coast
Intersection	Belle Terre Blvd	&	Zinnia Trail (N)
Date	September 1, 2015		
Time Period	16:00 to 18:00		**Trucks**

VHB Project #: 62393

Time Period	Northbound			Southbound		
	Left	Through	Right	Left	Through	Right
16:00 - 16:15	0	2	0	0	1	0
16:15 - 16:30	0	2	0	0	0	0
16:30 - 16:45	0	0	0	0	2	0
16:45 - 17:00	0	0	0	0	1	0
17:00 - 17:15	0	0	0	0	1	0
17:15 - 17:30	0	3	0	0	1	0
17:30 - 17:45	0	0	0	0	2	1
17:45 - 18:00	0	0	0	0	0	0

Time Period	Eastbound			Westbound		
	Left	Through	Right	Left	Through	Right
16:00 - 16:15	0	0	0	0	0	0
16:15 - 16:30	0	0	0	0	0	0
16:30 - 16:45	0	0	0	0	0	0
16:45 - 17:00	0	0	0	0	0	0
17:00 - 17:15	0	0	0	0	0	0
17:15 - 17:30	0	0	0	0	0	0
17:30 - 17:45	0	0	0	0	0	0
17:45 - 18:00	0	0	0	0	0	0

North / South
Belle Terre Blvd

East / West
Zinnia Trail (N)

Peak Hour
16:30 - 17:30

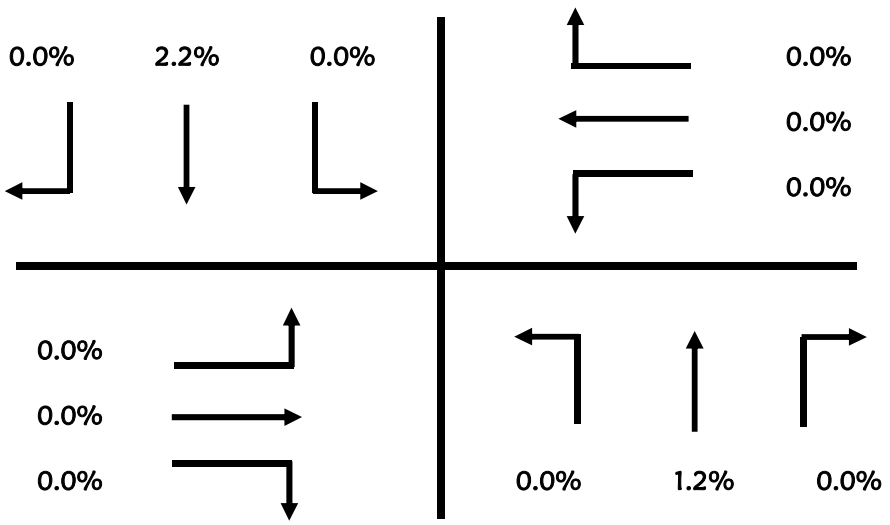

Roadway Count Summary

Vanasse Hangen Brustlin, Inc.

County	Flagler	**City**	Palm Coast
Intersection	Belle Terre Blvd	&	Zinnia Trail (N)
Date	September 1, 2015		
Time Period	16:00 to 18:00		**U-Turn & RTOR**

VHB Project #: 62393

Time Period	Northbound Left	Northbound Through	Northbound Right	Southbound Left	Southbound Through	Southbound Right
16:00 - 16:15	0	0	0	0	0	0
16:15 - 16:30	0	0	0	0	0	0
16:30 - 16:45	0	0	0	0	0	0
16:45 - 17:00	1	0	0	0	0	0
17:00 - 17:15	0	0	0	0	0	0
17:15 - 17:30	0	0	0	0	0	0
17:30 - 17:45	0	0	0	0	0	0
17:45 - 18:00	0	0	0	0	0	0

Time Period	Eastbound Left	Eastbound Through	Eastbound Right	Westbound Left	Westbound Through	Westbound Right
16:00 - 16:15	0	0	0	0	0	0
16:15 - 16:30	0	0	0	0	0	0
16:30 - 16:45	0	0	0	0	0	0
16:45 - 17:00	0	0	0	0	0	0
17:00 - 17:15	0	0	0	0	0	0
17:15 - 17:30	0	0	0	0	0	0
17:30 - 17:45	0	0	0	0	0	0
17:45 - 18:00	0	0	0	0	0	0

North / South
Belle Terre Blvd

East / West
Zinnia Trail (N)

Peak Hour
16:30 - 17:30

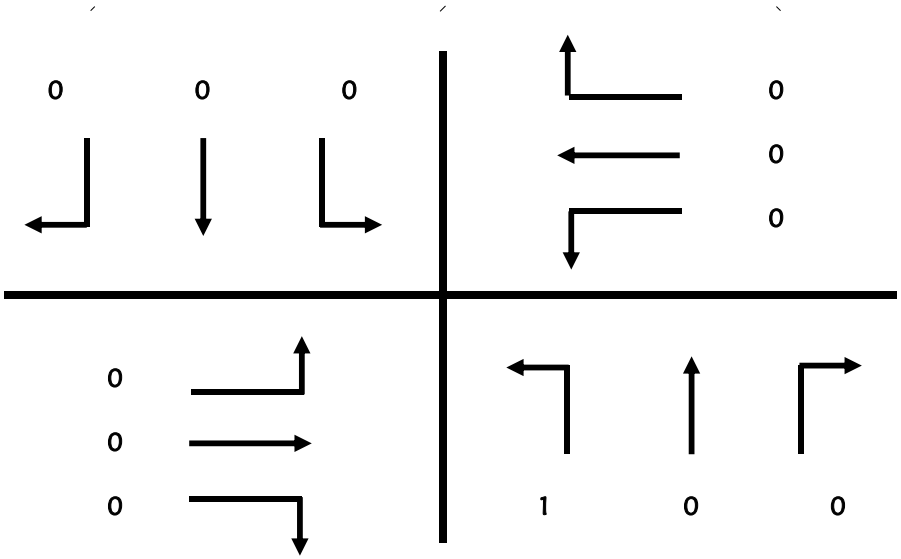

Pedestrian & Bicycle Summary

Project #: 62393 **NB/SB:** Belle Terre Blvd

Date: 9/1/2015 **EB/WB:** Zinnia Trail (N)

Hour

		7:00	8:00		16:00	17:00				
		1	2	3	4	5	6	7	8	
Eastbound ▶	Bike	0	2		1	0				**3**
	Ped	1	0		0	0				**1**
Westbound ◀	Bike	0	0		0	0				**0**
	Ped	0	0		0	0				**0**

Hour	Southbound Ped ▼	Southbound Bike ▼	Northbound Ped ▲	Northbound Bike ▲
1 7:00	0	0	0	0
2 8:00	0	0	0	0
3				
4 16:00	0	0	0	0
5 17:00	0	0	0	0
6				
7				
8				
	0	**0**	**0**	**0**

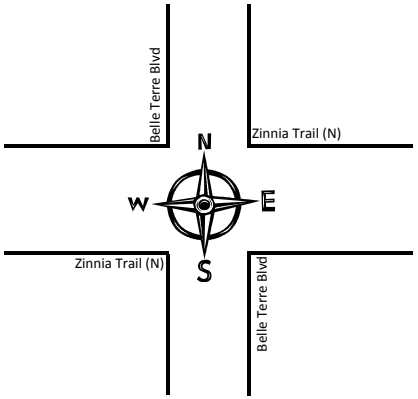

Southbound Ped ▼	Southbound Bike ▼	Northbound Ped ▲	Northbound Bike ▲	Hour
0	0	0	0	1 7:00
0	0	0	0	2 8:00
				3
0	0	0	0	4 16:00
0	0	0	0	5 17:00
				6
				7
				8
0	**0**	**0**	**0**	

		7:00	8:00		16:00	17:00				
		1	2	3	4	5	6	7	8	
Eastbound ▶	Bike	0	1		0	2				**3**
	Ped	1	0		1	0				**2**
Westbound ◀	Bike	0	0		0	0				**0**
	Ped	0	0		0	0				**0**

Hour

Roadway Count Summary

Vanasse Hangen Brustlin, Inc.

County	Flagler	**City**	Palm Coast
Intersection	Belle Terre Blvd		& Zaun Trail
Date	September 1, 2015		**All Vehicles**
Time Period	7:00 to 9:00		

VHB Project #: 62393

Time Period	Northbound Left	Northbound Through	Northbound Right	Southbound Left	Southbound Through	Southbound Right
7:00 - 7:15	0	46	0	0	41	0
7:15 - 7:30	0	59	0	0	40	0
7:30 - 7:45	0	75	0	0	48	2
7:45 - 8:00	0	63	0	0	46	3
8:00 - 8:15	1	46	0	0	49	1
8:15 - 8:30	2	55	0	0	34	4
8:30 - 8:45	0	56	0	0	46	1
8:45 - 9:00	0	45	0	0	50	3
	3	445	0	0	354	14

Time Period	Eastbound Left	Eastbound Through	Eastbound Right	Westbound Left	Westbound Through	Westbound Right
7:00 - 7:15	2	0	3	0	0	0
7:15 - 7:30	5	0	1	0	0	0
7:30 - 7:45	7	0	2	0	0	0
7:45 - 8:00	4	0	1	0	0	0
8:00 - 8:15	5	0	1	0	0	0
8:15 - 8:30	3	0	0	0	0	0
8:30 - 8:45	7	0	3	0	0	0
8:45 - 9:00	2	0	0	0	0	0
	35	0	11	0	0	0

North / South
Belle Terre Blvd

East / West
Zaun Trail

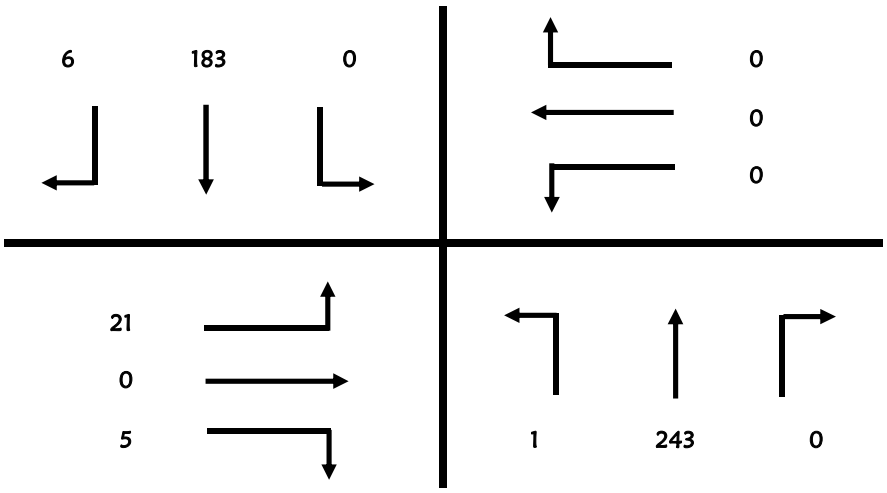

Peak Hour
7:15 - 8:15

Peak Hour Factor
0.86

Total Pk Hr Voume
459

Roadway Count Summary

Vanasse Hangen Brustlin, Inc.

County	Flagler	**City**	Palm Coast
Intersection	Belle Terre Blvd	&	Zaun Trail
Date	September 1, 2015		
Time Period	7:00 to 9:00		**Trucks**

VHB Project #: 62393

Time Period	Northbound			Southbound		
	Left	Through	Right	Left	Through	Right
7:00 - 7:15	0	3	0	0	3	0
7:15 - 7:30	0	4	0	0	0	0
7:30 - 7:45	0	3	0	0	1	0
7:45 - 8:00	0	1	0	0	1	0
8:00 - 8:15	0	1	0	0	5	0
8:15 - 8:30	1	3	0	0	1	0
8:30 - 8:45	0	3	0	0	4	0
8:45 - 9:00	0	2	0	0	0	0

Time Period	Eastbound			Westbound		
	Left	Through	Right	Left	Through	Right
7:00 - 7:15	0	0	0	0	0	0
7:15 - 7:30	0	0	0	0	0	0
7:30 - 7:45	0	0	0	0	0	0
7:45 - 8:00	0	0	1	0	0	0
8:00 - 8:15	0	0	1	0	0	0
8:15 - 8:30	0	0	0	0	0	0
8:30 - 8:45	0	0	0	0	0	0
8:45 - 9:00	0	0	0	0	0	0

North / South
Belle Terre Blvd

East / West
Zaun Trail

Peak Hour
7:15 - 8:15

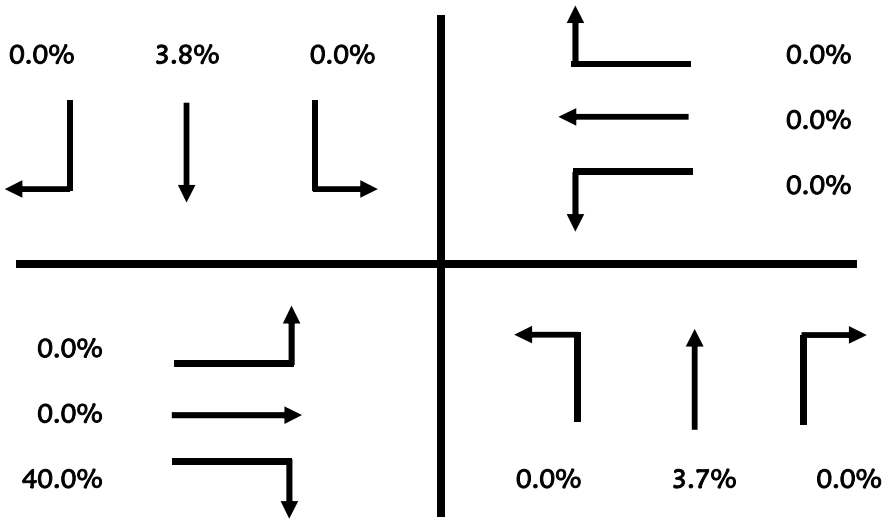

Roadway Count Summary

Vanasse Hangen Brustlin, Inc.

County	Flagler	**City**	Palm Coast
Intersection	Belle Terre Blvd	&	Zaun Trail
Date	September 1, 2015		
Time Period	7:00 to 9:00		**U-Turn & RTOR**

VHB Project #: 62393

Time Period	Northbound Left	Northbound Through	Northbound Right	Southbound Left	Southbound Through	Southbound Right
7:00 - 7:15	0	0	0	0	0	0
7:15 - 7:30	0	0	0	0	0	0
7:30 - 7:45	0	0	0	0	0	0
7:45 - 8:00	0	0	0	0	0	0
8:00 - 8:15	0	0	0	0	0	0
8:15 - 8:30	0	0	0	0	0	0
8:30 - 8:45	0	0	0	0	0	0
8:45 - 9:00	0	0	0	0	0	0

Time Period	Eastbound Left	Eastbound Through	Eastbound Right	Westbound Left	Westbound Through	Westbound Right
7:00 - 7:15	1	0	0	0	0	0
7:15 - 7:30	0	0	0	0	0	0
7:30 - 7:45	0	0	0	0	0	0
7:45 - 8:00	0	0	0	0	0	0
8:00 - 8:15	0	0	0	0	0	0
8:15 - 8:30	0	0	0	0	0	0
8:30 - 8:45	0	0	0	0	0	0
8:45 - 9:00	0	0	0	0	0	0

North / South
Belle Terre Blvd

East / West
Zaun Trail

Peak Hour
7:15 - 8:15

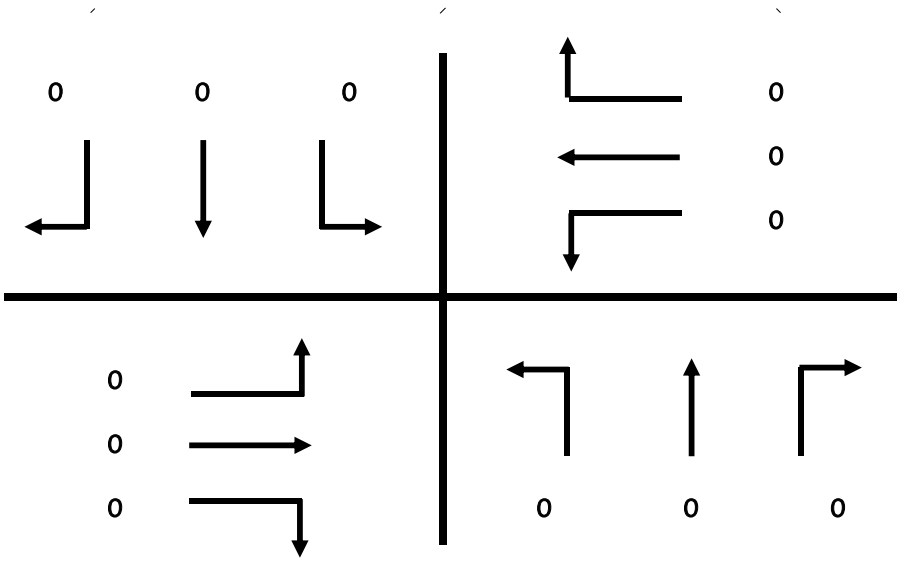

Roadway Count Summary

Vanasse Hangen Brustlin, Inc.

County	Flagler	**City**	Palm Coast
Intersection	Belle Terre Blvd	&	Zaun Trail
Date	September 1, 2015		**All Vehicles**
Time Period	16:00 to 18:00		

VHB Project #: 62393

Time Period	Northbound Left	Northbound Through	Northbound Right	Southbound Left	Southbound Through	Southbound Right
16:00 - 16:15	1	47	0	0	57	6
16:15 - 16:30	3	55	0	0	52	2
16:30 - 16:45	2	58	0	0	66	3
16:45 - 17:00	0	72	0	0	50	3
17:00 - 17:15	2	56	0	0	55	3
17:15 - 17:30	4	61	0	0	67	6
17:30 - 17:45	2	53	0	0	48	5
17:45 - 18:00	1	60	0	0	62	5
	15	462	0	0	457	33

Time Period	Eastbound Left	Eastbound Through	Eastbound Right	Westbound Left	Westbound Through	Westbound Right
16:00 - 16:15	1	0	0	0	0	0
16:15 - 16:30	4	0	1	0	0	0
16:30 - 16:45	3	0	0	0	0	0
16:45 - 17:00	2	0	2	0	0	0
17:00 - 17:15	5	0	0	0	0	0
17:15 - 17:30	0	0	0	0	0	0
17:30 - 17:45	0	0	1	0	0	0
17:45 - 18:00	8	0	1	0	0	0
	23	0	5	0	0	0

North / South
Belle Terre Blvd

East / West
Zaun Trail

Peak Hour
16:30 - 17:30

Peak Hour Factor
0.94

Total Pk Hr Voume
520

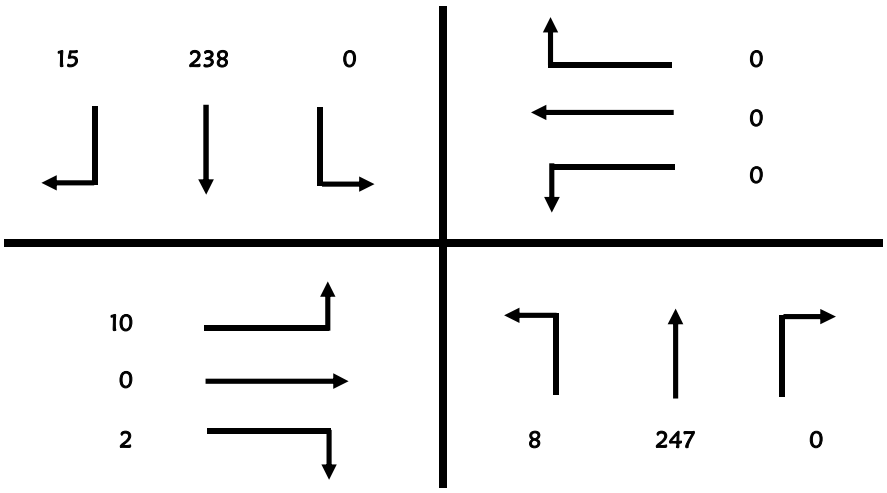

Roadway Count Summary

Vanasse Hangen Brustlin, Inc.

County	Flagler	**City**	Palm Coast
Intersection	Belle Terre Blvd	&	Zaun Trail
Date	September 1, 2015		
Time Period	16:00 to 18:00		**Trucks**

VHB Project #: 62393

Time Period	Northbound			Southbound		
	Left	Through	Right	Left	Through	Right
16:00 - 16:15	0	1	0	0	1	0
16:15 - 16:30	0	3	0	0	0	0
16:30 - 16:45	0	0	0	0	2	0
16:45 - 17:00	0	0	0	0	1	0
17:00 - 17:15	0	0	0	0	0	0
17:15 - 17:30	0	0	0	0	2	0
17:30 - 17:45	0	0	0	0	3	0
17:45 - 18:00	0	0	0	0	0	0

Time Period	Eastbound			Westbound		
	Left	Through	Right	Left	Through	Right
16:00 - 16:15	0	0	0	0	0	0
16:15 - 16:30	0	0	0	0	0	0
16:30 - 16:45	0	0	0	0	0	0
16:45 - 17:00	0	0	0	0	0	0
17:00 - 17:15	0	0	0	0	0	0
17:15 - 17:30	0	0	0	0	0	0
17:30 - 17:45	0	0	0	0	0	0
17:45 - 18:00	0	0	0	0	0	0

North / South
Belle Terre Blvd

East / West
Zaun Trail

Peak Hour
16:30 - 17:30

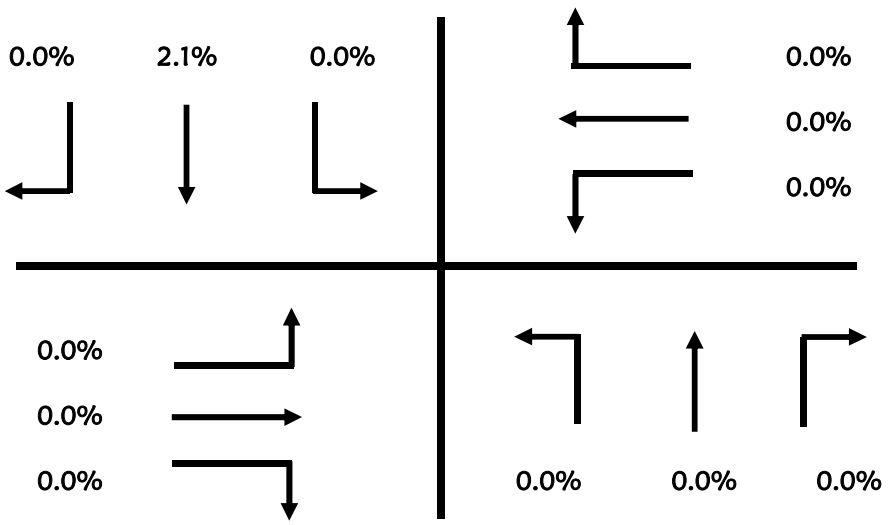

Roadway Count Summary

Vanasse Hangen Brustlin, Inc.

County	Flagler	**City**	Palm Coast
Intersection	Belle Terre Blvd	&	Zaun Trail
Date	September 1, 2015		
Time Period	16:00 to 18:00		**U-Turn & RTOR**

VHB Project #: 62393

Time Period	Northbound Left	Northbound Through	Northbound Right	Southbound Left	Southbound Through	Southbound Right
16:00 - 16:15	0	0	0	0	0	0
16:15 - 16:30	0	0	0	0	0	0
16:30 - 16:45	0	0	0	0	0	0
16:45 - 17:00	0	0	0	0	0	0
17:00 - 17:15	0	0	0	0	0	0
17:15 - 17:30	0	0	0	0	0	0
17:30 - 17:45	0	0	0	0	0	0
17:45 - 18:00	0	0	0	0	0	0

Time Period	Eastbound Left	Eastbound Through	Eastbound Right	Westbound Left	Westbound Through	Westbound Right
16:00 - 16:15	0	0	0	0	0	0
16:15 - 16:30	0	0	0	0	0	0
16:30 - 16:45	0	0	0	0	0	0
16:45 - 17:00	0	0	0	0	0	0
17:00 - 17:15	0	0	0	0	0	0
17:15 - 17:30	0	0	0	0	0	0
17:30 - 17:45	0	0	0	0	0	0
17:45 - 18:00	0	0	0	0	0	0

North / South
Belle Terre Blvd

East / West
Zaun Trail

Peak Hour
16:30 - 17:30

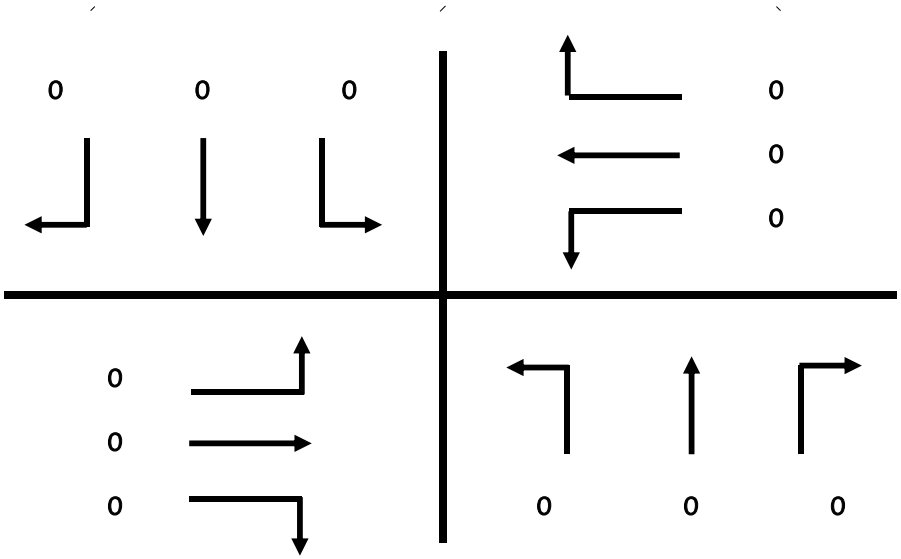

Pedestrian & Bicycle Summary

Project #: 62393 **NB/SB:** Belle Terre Blvd

Date: 9/1/2015 **EB/WB:** Zaun Trail

		Hour								
		7:00	8:00		16:00	17:00				
		1	2	3	4	5	6	7	8	
Eastbound ▶	Bike	0	2		1	0				**3**
	Ped	1	0		0	0				**1**
Westbound ◀	Bike	0	0		0	0				**0**
	Ped	0	0		0	0				**0**

		Southbound		**Northbound**	
	Hour	Ped ▼	Bike	Ped ▲	Bike
1	7:00	0	0	0	0
2	8:00	0	0	0	0
3					
4	16:00	0	0	0	0
5	17:00	0	0	0	0
6					
7					
8					
		0	**0**	**0**	**0**

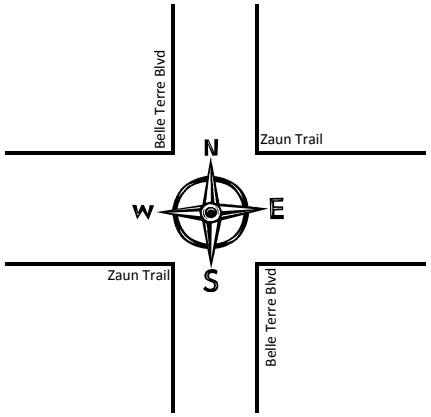

	Southbound		**Northbound**		
	Ped ▼	Bike	Ped ▲	Bike	Hour
1	0	0	0	0	7:00
2	0	0	0	0	8:00
3					
4	0	0	0	0	16:00
5	0	0	0	0	17:00
6					
7					
8					
	0	**0**	**0**	**0**	

Eastbound ▶	Bike	0	1		0	0				**1**
	Ped	0	0		1	1				**2**
Westbound ◀	Bike	0	0		0	0				**0**
	Ped	0	0		0	0				**0**
	Hour	7:00	8:00		16:00	17:00				
		1	2	3	4	5	6	7	8	

Roadway Count Summary

Vanasse Hangen Brustlin, Inc.

County	Flagler	**City**	Palm Coast
Intersection	Belle Terre Blvd	&	Zebulah's Trail (S)
Date	September 1, 2015		**All Vehicles**
Time Period	7:00 to 9:00		

VHB Project #: 62393

Time Period	Northbound Left	Northbound Through	Northbound Right	Southbound Left	Southbound Through	Southbound Right
7:00 - 7:15	3	44	0	0	31	1
7:15 - 7:30	2	62	0	0	37	0
7:30 - 7:45	1	81	0	0	41	4
7:45 - 8:00	0	66	0	0	45	2
8:00 - 8:15	3	50	0	0	46	1
8:15 - 8:30	0	59	0	0	37	2
8:30 - 8:45	2	60	0	0	42	1
8:45 - 9:00	0	44	0	0	51	0
	11	466	0	0	330	11

Time Period	Eastbound Left	Eastbound Through	Eastbound Right	Westbound Left	Westbound Through	Westbound Right
7:00 - 7:15	3	0	9	0	0	0
7:15 - 7:30	7	0	5	0	0	0
7:30 - 7:45	5	0	6	0	0	0
7:45 - 8:00	5	0	4	0	0	0
8:00 - 8:15	1	0	4	0	0	0
8:15 - 8:30	5	0	2	0	0	0
8:30 - 8:45	5	0	6	0	0	0
8:45 - 9:00	3	0	1	0	0	0
	34	0	37	0	0	0

North / South
Belle Terre Blvd

East / West
Zebulah's Trail (S)

Peak Hour
7:15 - 8:15

Peak Hour Factor
0.87

Total Pk Hr Voume
478

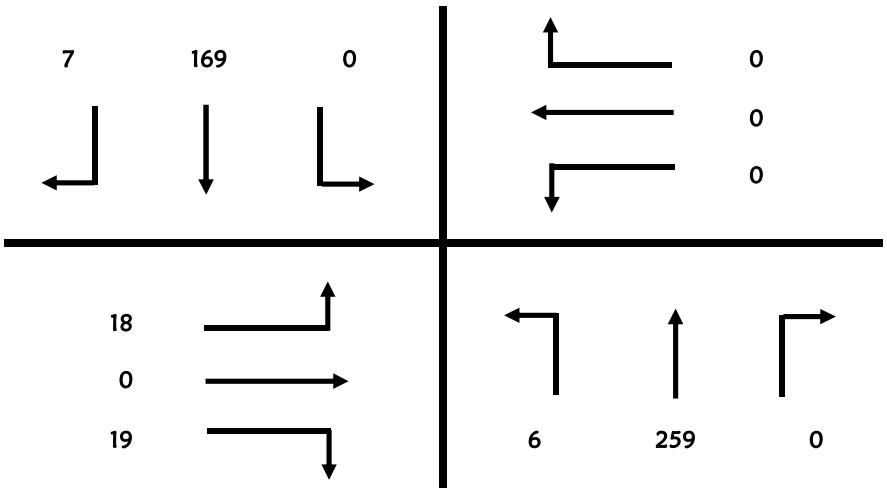

Roadway Count Summary

Vanasse Hangen Brustlin, Inc.

County	Flagler	**City**	Palm Coast
Intersection	Belle Terre Blvd	&	Zebulah's Trail (S)
Date	September 1, 2015		
Time Period	7:00 to 9:00		**Trucks**

VHB Project #: 62393

Time Period	Northbound			Southbound		
	Left	Through	Right	Left	Through	Right
7:00 - 7:15	0	3	0	0	2	0
7:15 - 7:30	0	4	0	0	0	0
7:30 - 7:45	1	2	0	0	1	0
7:45 - 8:00	0	1	0	0	1	0
8:00 - 8:15	0	1	0	0	5	0
8:15 - 8:30	0	3	0	0	1	0
8:30 - 8:45	0	2	0	0	3	0
8:45 - 9:00	0	3	0	0	1	0

Time Period	Eastbound			Westbound		
	Left	Through	Right	Left	Through	Right
7:00 - 7:15	0	0	1	0	0	0
7:15 - 7:30	0	0	0	0	0	0
7:30 - 7:45	0	0	0	0	0	0
7:45 - 8:00	0	0	0	0	0	0
8:00 - 8:15	0	0	0	0	0	0
8:15 - 8:30	0	0	0	0	0	0
8:30 - 8:45	0	0	0	0	0	0
8:45 - 9:00	0	0	0	0	0	0

North / South
Belle Terre Blvd

East / West
Zebulah's Trail (S)

Peak Hour
7:15 - 8:15

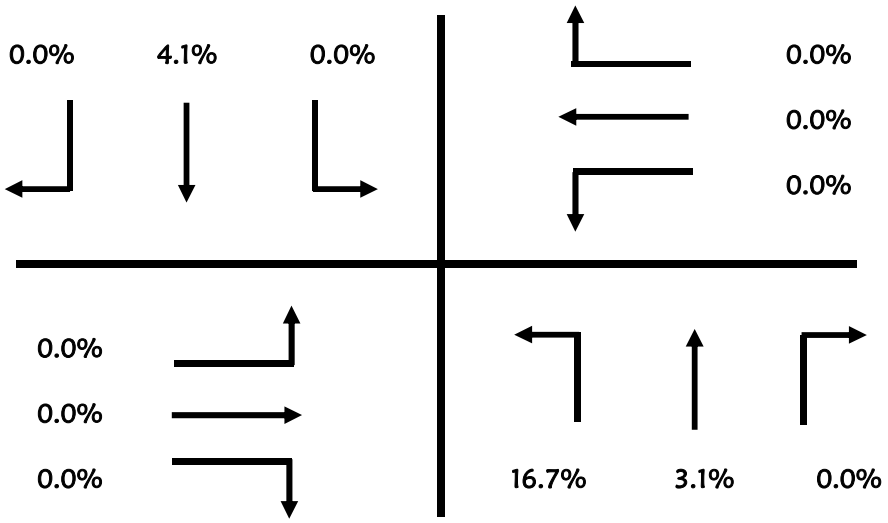

Roadway Count Summary

Vanasse Hangen Brustlin, Inc.

County	Flagler	**City**	Palm Coast
Intersection	Belle Terre Blvd	&	Zebulah's Trail (S)
Date	September 1, 2015		
Time Period	7:00 to 9:00		**U-Turn & RTOR**

VHB Project #: 62393

Time Period	Northbound			Southbound		
	Left	Through	Right	Left	Through	Right
7:00 - 7:15	0	0	0	0	0	0
7:15 - 7:30	1	0	0	0	0	0
7:30 - 7:45	0	0	0	0	0	0
7:45 - 8:00	0	0	0	0	0	0
8:00 - 8:15	0	0	0	0	0	0
8:15 - 8:30	0	0	0	0	0	0
8:30 - 8:45	0	0	0	0	0	0
8:45 - 9:00	0	0	0	0	0	0

Time Period	Eastbound			Westbound		
	Left	Through	Right	Left	Through	Right
7:00 - 7:15	0	0	0	0	0	0
7:15 - 7:30	0	0	0	0	0	0
7:30 - 7:45	0	0	0	0	0	0
7:45 - 8:00	0	0	0	0	0	0
8:00 - 8:15	0	0	0	0	0	0
8:15 - 8:30	0	0	0	0	0	0
8:30 - 8:45	0	0	0	0	0	0
8:45 - 9:00	0	0	0	0	0	0

North / South
Belle Terre Blvd

East / West
Zebulah's Trail (S)

Peak Hour
7:15 - 8:15

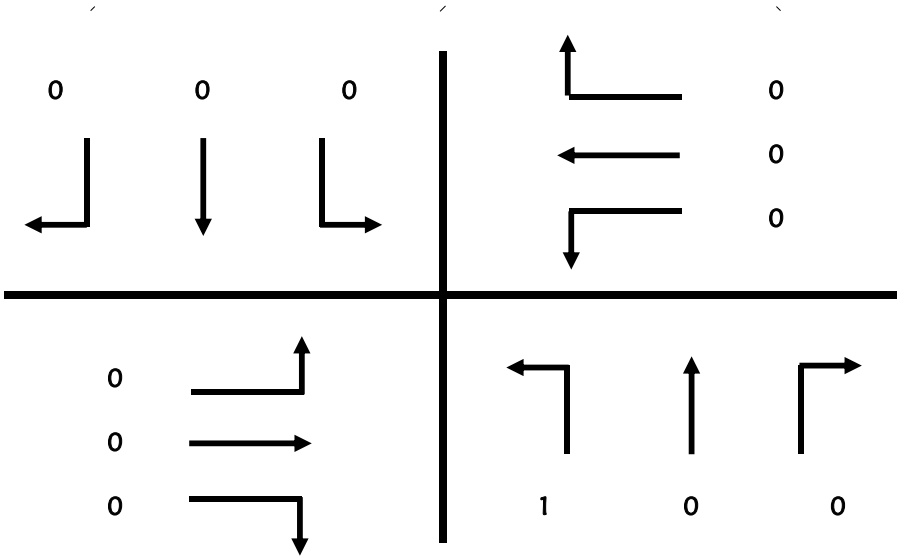

Roadway Count Summary

Vanasse Hangen Brustlin, Inc.

0 0

County	Flagler	**City**	Palm Coast
Intersection	Belle Terre Blvd	&	Zebulah's Trail (S)
Date	September 1, 2015		**All Vehicles**
Time Period	16:00 to 18:00		

VHB Project #: 62393

Time Period	Northbound Left	Northbound Through	Northbound Right	Southbound Left	Southbound Through	Southbound Right
16:00 - 16:15	1	42	0	0	59	4
16:15 - 16:30	1	63	0	0	54	1
16:30 - 16:45	1	58	0	0	66	6
16:45 - 17:00	3	72	0	0	52	3
17:00 - 17:15	3	58	0	0	56	4
17:15 - 17:30	7	52	0	0	68	9
17:30 - 17:45	6	51	0	0	59	6
17:45 - 18:00	4	63	0	0	63	3
	26	459	0	0	477	36

Time Period	Eastbound Left	Eastbound Through	Eastbound Right	Westbound Left	Westbound Through	Westbound Right
16:00 - 16:15	4	0	3	0	0	0
16:15 - 16:30	4	0	0	0	0	0
16:30 - 16:45	3	0	2	0	0	0
16:45 - 17:00	4	0	3	0	0	0
17:00 - 17:15	0	0	2	0	0	0
17:15 - 17:30	1	0	2	0	0	0
17:30 - 17:45	7	0	0	0	0	0
17:45 - 18:00	2	0	0	0	0	0
	25	0	12	0	0	0

North / South
Belle Terre Blvd

East / West
Zebulah's Trail (S)

Peak Hour
16:30 - 17:30

Peak Hour Factor
0.96

Total Pk Hr Voume
535

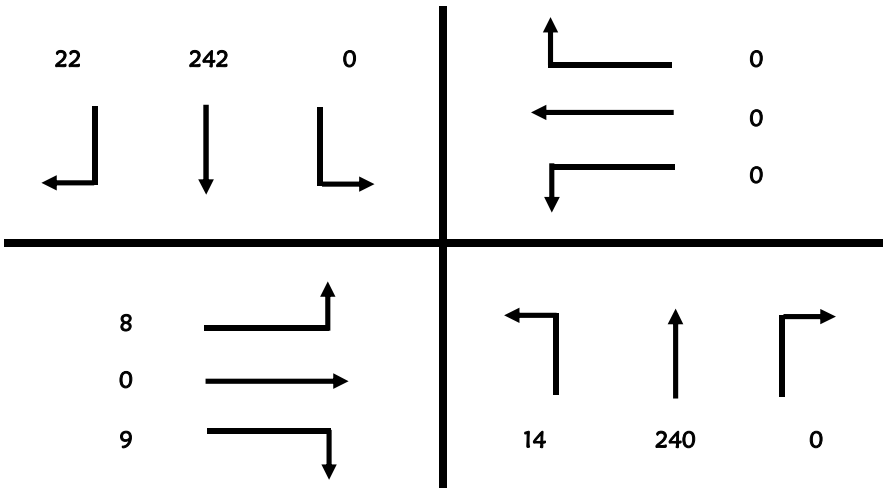

Roadway Count Summary

Vanasse Hangen Brustlin, Inc.

0.29167

County	Flagler	**City**	Palm Coast
Intersection	Belle Terre Blvd	&	Zebulah's Trail (S)
Date	September 1, 2015		
Time Period	16:00 to 18:00		**Trucks**

VHB Project #: 62393

Time Period	Northbound Left	Northbound Through	Northbound Right	Southbound Left	Southbound Through	Southbound Right
16:00 - 16:15	0	2	0	0	1	0
16:15 - 16:30	0	2	0	0	0	0
16:30 - 16:45	0	0	0	0	2	0
16:45 - 17:00	0	0	0	0	1	0
17:00 - 17:15	0	0	0	0	0	0
17:15 - 17:30	0	0	0	0	1	0
17:30 - 17:45	0	0	0	0	3	0
17:45 - 18:00	1	0	0	0	1	0

Time Period	Eastbound Left	Eastbound Through	Eastbound Right	Westbound Left	Westbound Through	Westbound Right
16:00 - 16:15	0	0	0	0	0	0
16:15 - 16:30	0	0	0	0	0	0
16:30 - 16:45	0	0	0	0	0	0
16:45 - 17:00	0	0	0	0	0	0
17:00 - 17:15	0	0	0	0	0	0
17:15 - 17:30	0	0	0	0	0	0
17:30 - 17:45	0	0	0	0	0	0
17:45 - 18:00	0	0	0	0	0	0

North / South
Belle Terre Blvd

East / West
Zebulah's Trail (S)

Peak Hour
16:30 - 17:30

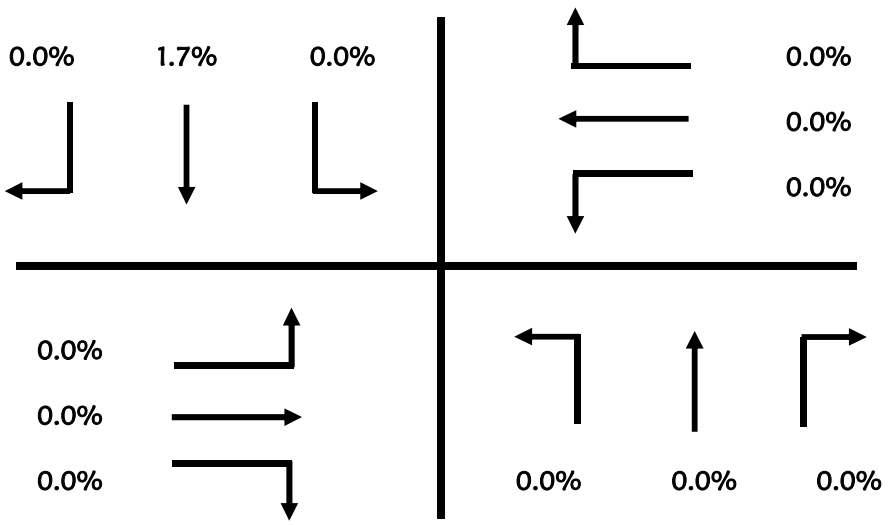

Roadway Count Summary

Vanasse Hangen Brustlin, Inc.

0.2916667 0.3333333

County	Flagler	**City**	Palm Coast
Intersection	Belle Terre Blvd	&	Zebulah's Trail (S)
Date	September 1, 2015		
Time Period	16:00 to 18:00		**U-Turn & RTOR**

VHB Project #: 62393

Time Period	Northbound Left	Northbound Through	Northbound Right	Southbound Left	Southbound Through	Southbound Right
16:00 - 16:15	0	0	0	0	0	0
16:15 - 16:30	0	0	0	0	0	0
16:30 - 16:45	0	0	0	0	0	0
16:45 - 17:00	0	0	0	0	0	0
17:00 - 17:15	0	0	0	0	0	0
17:15 - 17:30	0	0	0	0	0	0
17:30 - 17:45	0	0	0	0	0	0
17:45 - 18:00	0	0	0	0	0	0

Time Period	Eastbound Left	Eastbound Through	Eastbound Right	Westbound Left	Westbound Through	Westbound Right
16:00 - 16:15	0	0	0	0	0	0
16:15 - 16:30	0	0	0	0	0	0
16:30 - 16:45	0	0	0	0	0	0
16:45 - 17:00	0	0	0	0	0	0
17:00 - 17:15	0	0	0	0	0	0
17:15 - 17:30	0	0	0	0	0	0
17:30 - 17:45	0	0	0	0	0	0
17:45 - 18:00	0	0	0	0	0	0

North / South
Belle Terre Blvd

East / West
Zebulah's Trail (S)

Peak Hour
16:30 - 17:30

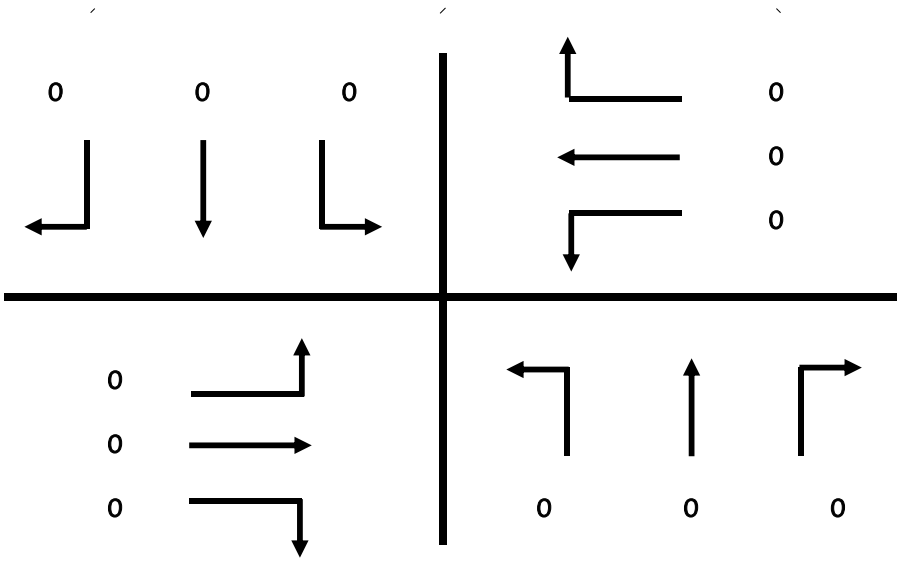

Pedestrian & Bicycle Summary

Project #: 62393 **NB/SB:** Belle Terre Blvd

Date: 9/1/2015 **EB/WB:** Zebulah's Trail (S)

Hour

		7:00	8:00		16:00	17:00				
		1	2	3	4	5	6	7	8	
Eastbound ▶	Bike	0	1		1	0				2
	Ped	0	0		0	0				0
Westbound ◀	Bike	0	0		0	0				0
	Ped	0	0							0

Hour	Southbound Ped ▼	Southbound Bike ▼	Northbound Ped ▲	Northbound Bike ▲
1 7:00	0	0	0	0
2 8:00	0	0	0	0
3				
4 16:00	0	0	0	0
5 17:00	0	0	0	0
6				
7				
8				
	0	0	0	0

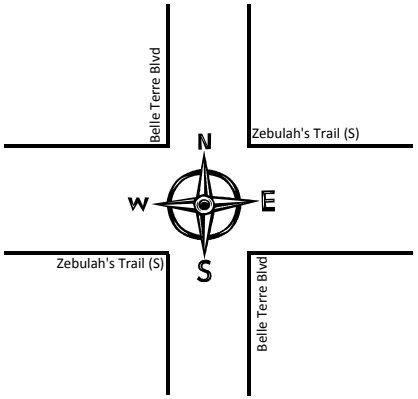

Southbound Ped ▼	Southbound Bike ▼	Northbound Ped ▲	Northbound Bike ▲	Hour
0	0	0	0	1 7:00
0	0	0	0	2 8:00
				3
0	0	0	0	4 16:00
0	0	0	0	5 17:00
				6
				7
				8
0	0	0	0	

		7:00	8:00		16:00	17:00				
		1	2	3	4	5	6	7	8	
Eastbound ▶	Bike	0	1		0	2				3
	Ped	0	0		1	0				1
Westbound ◀	Bike	0	0		0	0				0
	Ped	0	0		0	0				0

Hour

Roadway Count Summary

Vanasse Hangen Brustlin, Inc.

County	Flagler	**City**	Palm Coast
Intersection	Belle Terre Blvd		& Zebulah's Trail (N)
Date	September 1, 2015		**All Vehicles**
Time Period	7:00 to 9:00		

VHB Project #: 62393

Time Period	Northbound Left	Northbound Through	Northbound Right	Southbound Left	Southbound Through	Southbound Right
7:00 - 7:15	1	49	0	0	33	5
7:15 - 7:30	0	61	0	0	34	3
7:30 - 7:45	1	85	0	0	43	3
7:45 - 8:00	0	76	0	0	48	5
8:00 - 8:15	0	51	0	0	50	2
8:15 - 8:30	1	66	0	0	38	4
8:30 - 8:45	0	61	0	0	41	2
8:45 - 9:00	0	50	0	0	51	8
	3	499	0	0	338	32

Time Period	Eastbound Left	Eastbound Through	Eastbound Right	Westbound Left	Westbound Through	Westbound Right
7:00 - 7:15	9	0	0	0	0	0
7:15 - 7:30	8	0	0	0	0	0
7:30 - 7:45	18	0	1	0	0	0
7:45 - 8:00	18	0	2	0	0	0
8:00 - 8:15	5	0	0	0	0	0
8:15 - 8:30	11	0	1	0	0	0
8:30 - 8:45	15	0	2	0	0	0
8:45 - 9:00	6	0	0	0	0	0
	90	0	6	0	0	0

North / South
Belle Terre Blvd

East / West
Zebulah's Trail (N)

Peak Hour
7:30 - 8:30

Peak Hour Factor
0.88

Total Pk Hr Voume
529

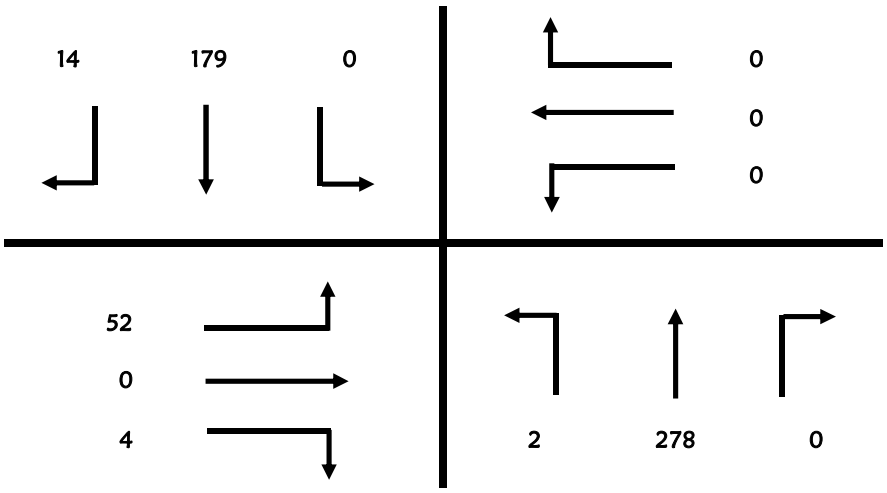

Roadway Count Summary

Vanasse Hangen Brustlin, Inc.

County	Flagler	**City**	Palm Coast
Intersection	Belle Terre Blvd	&	Zebulah's Trail (N)
Date	September 1, 2015		
Time Period	7:00 to 9:00		**Trucks**

VHB Project #: 62393

Time Period	Northbound			Southbound		
	Left	Through	Right	Left	Through	Right
7:00 - 7:15	0	3	0	0	1	0
7:15 - 7:30	0	3	0	0	0	0
7:30 - 7:45	0	2	0	0	1	0
7:45 - 8:00	0	2	0	0	1	0
8:00 - 8:15	0	1	0	0	5	0
8:15 - 8:30	0	3	0	0	1	0
8:30 - 8:45	0	2	0	0	3	0
8:45 - 9:00	0	3	0	0	1	1

Time Period	Eastbound			Westbound		
	Left	Through	Right	Left	Through	Right
7:00 - 7:15	0	0	0	0	0	0
7:15 - 7:30	0	0	0	0	0	0
7:30 - 7:45	2	0	0	0	0	0
7:45 - 8:00	0	0	0	0	0	0
8:00 - 8:15	0	0	0	0	0	0
8:15 - 8:30	1	0	0	0	0	0
8:30 - 8:45	0	0	0	0	0	0
8:45 - 9:00	0	0	0	0	0	0

North / South
Belle Terre Blvd

East / West
Zebulah's Trail (N)

Peak Hour
7:30 - 8:30

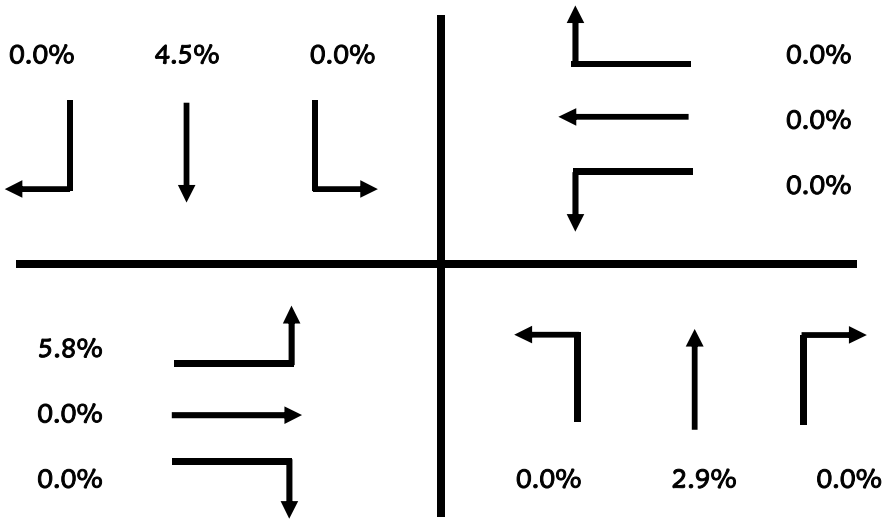

Roadway Count Summary

Vanasse Hangen Brustlin, Inc.

County	Flagler	**City**	Palm Coast
Intersection	Belle Terre Blvd	&	Zebulah's Trail (N)
Date	September 1, 2015		
Time Period	7:00 to 9:00		**U-Turn & RTOR**

VHB Project #: 62393

Time Period	Northbound			Southbound		
	Left	Through	Right	Left	Through	Right
7:00 - 7:15	0	0	0	0	0	0
7:15 - 7:30	0	0	0	0	0	0
7:30 - 7:45	0	0	0	0	0	0
7:45 - 8:00	0	0	0	0	0	0
8:00 - 8:15	0	0	0	0	0	0
8:15 - 8:30	0	0	0	0	0	0
8:30 - 8:45	0	0	0	0	0	0
8:45 - 9:00	0	0	0	0	0	0

Time Period	Eastbound			Westbound		
	Left	Through	Right	Left	Through	Right
7:00 - 7:15	0	0	0	0	0	0
7:15 - 7:30	0	0	0	0	0	0
7:30 - 7:45	0	0	0	0	0	0
7:45 - 8:00	0	0	0	0	0	0
8:00 - 8:15	0	0	0	0	0	0
8:15 - 8:30	0	0	0	0	0	0
8:30 - 8:45	0	0	0	0	0	0
8:45 - 9:00	0	0	0	0	0	0

North / South
Belle Terre Blvd

East / West
Zebulah's Trail (N)

Peak Hour
7:30 - 8:30

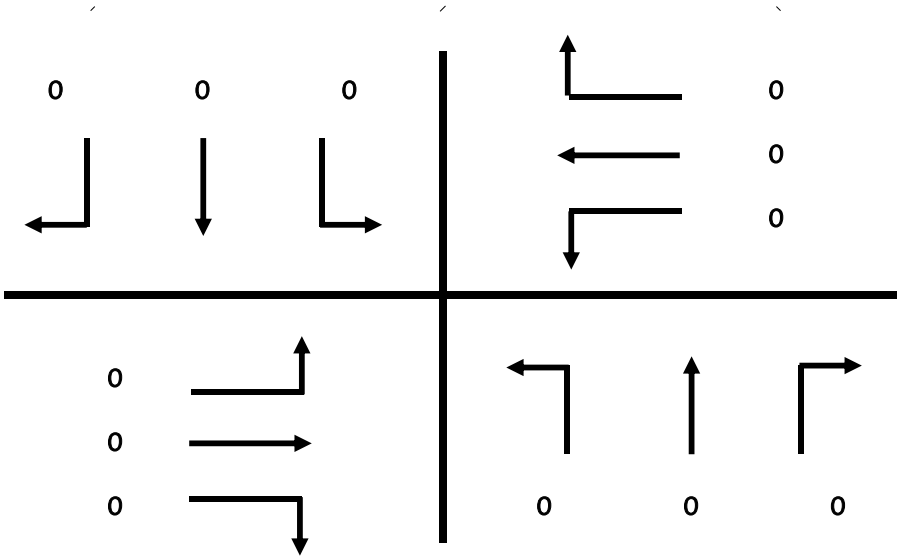

Roadway Count Summary

Vanasse Hangen Brustlin, Inc.

County	Flagler	**City**	Palm Coast
Intersection	Belle Terre Blvd	&	Zebulah's Trail (N)
Date	September 1, 2015		**All Vehicles**
Time Period	16:00 to 18:00		

VHB Project #: 62393

Time Period	Northbound Left	Northbound Through	Northbound Right	Southbound Left	Southbound Through	Southbound Right
16:00 - 16:15	2	48	0	0	63	13
16:15 - 16:30	0	61	0	0	56	8
16:30 - 16:45	0	58	0	0	76	17
16:45 - 17:00	3	79	0	0	52	8
17:00 - 17:15	1	57	0	0	59	15
17:15 - 17:30	3	46	0	0	79	17
17:30 - 17:45	0	59	0	0	62	18
17:45 - 18:00	0	71	0	0	62	12
	9	479	0	0	509	108

Time Period	Eastbound Left	Eastbound Through	Eastbound Right	Westbound Left	Westbound Through	Westbound Right
16:00 - 16:15	9	0	0	0	0	0
16:15 - 16:30	11	0	0	0	0	0
16:30 - 16:45	10	0	0	0	0	0
16:45 - 17:00	9	0	0	0	0	0
17:00 - 17:15	8	0	1	0	0	0
17:15 - 17:30	8	0	0	0	0	0
17:30 - 17:45	5	0	1	0	0	0
17:45 - 18:00	12	0	2	0	0	0
	72	0	4	0	0	0

North / South
Belle Terre Blvd

East / West
Zebulah's Trail (N)

Peak Hour
16:30 - 17:30

Peak Hour Factor
0.94

Total Pk Hr Voume
606

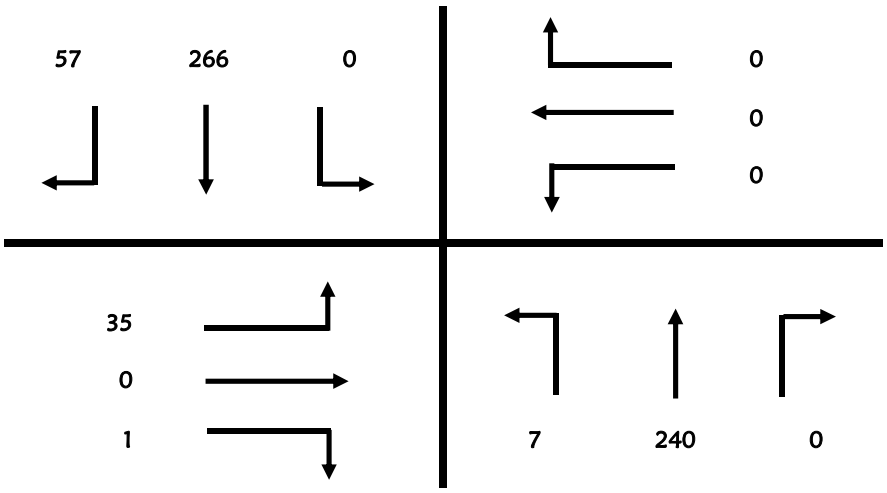

Roadway Count Summary

Vanasse Hangen Brustlin, Inc.

County	Flagler	**City**	Palm Coast
Intersection	Belle Terre Blvd	&	Zebulah's Trail (N)
Date	September 1, 2015		
Time Period	16:00 to 18:00		**Trucks**

VHB Project #: 62393

Time Period	Northbound			Southbound		
	Left	Through	Right	Left	Through	Right
16:00 - 16:15	0	3	0	0	1	0
16:15 - 16:30	0	2	0	0	0	0
16:30 - 16:45	0	1	0	0	2	0
16:45 - 17:00	0	0	0	0	1	0
17:00 - 17:15	0	0	0	0	0	0
17:15 - 17:30	0	0	0	0	2	0
17:30 - 17:45	0	0	0	0	3	0
17:45 - 18:00	0	0	0	0	0	1

Time Period	Eastbound			Westbound		
	Left	Through	Right	Left	Through	Right
16:00 - 16:15	0	0	0	0	0	0
16:15 - 16:30	0	0	0	0	0	0
16:30 - 16:45	0	0	0	0	0	0
16:45 - 17:00	0	0	0	0	0	0
17:00 - 17:15	0	0	0	0	0	0
17:15 - 17:30	0	0	0	0	0	0
17:30 - 17:45	0	0	0	0	0	0
17:45 - 18:00	0	0	0	0	0	0

North / South
Belle Terre Blvd

East / West
Zebulah's Trail (N)

Peak Hour
16:30 - 17:30

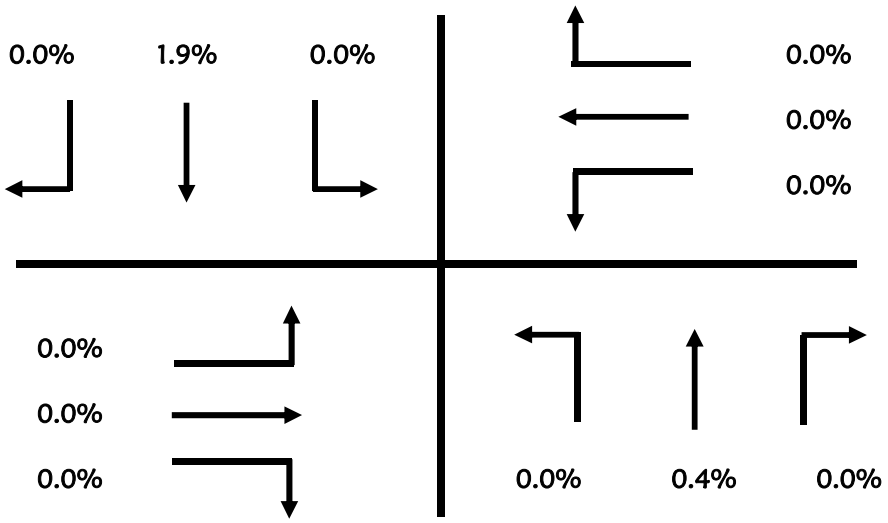

Roadway Count Summary

Vanasse Hangen Brustlin, Inc.

County	Flagler	**City**	Palm Coast
Intersection	Belle Terre Blvd	&	Zebulah's Trail (N)
Date	September 1, 2015		
Time Period	16:00 to 18:00		**U-Turn & RTOR**

VHB Project #: 62393

Time Period	Northbound			Southbound		
	Left	Through	Right	Left	Through	Right
16:00 - 16:15	0	0	0	0	0	0
16:15 - 16:30	0	0	0	0	0	0
16:30 - 16:45	0	0	0	0	0	0
16:45 - 17:00	0	0	0	0	0	0
17:00 - 17:15	0	0	0	0	0	0
17:15 - 17:30	0	0	0	0	0	0
17:30 - 17:45	0	0	0	0	0	0
17:45 - 18:00	0	0	0	0	0	0

Time Period	Eastbound			Westbound		
	Left	Through	Right	Left	Through	Right
16:00 - 16:15	0	0	0	0	0	0
16:15 - 16:30	0	0	0	0	0	0
16:30 - 16:45	0	0	0	0	0	0
16:45 - 17:00	0	0	0	0	0	0
17:00 - 17:15	0	0	0	0	0	0
17:15 - 17:30	0	0	0	0	0	0
17:30 - 17:45	0	0	0	0	0	0
17:45 - 18:00	0	0	0	0	0	0

North / South
Belle Terre Blvd

East / West
Zebulah's Trail (N)

Peak Hour
16:30 - 17:30

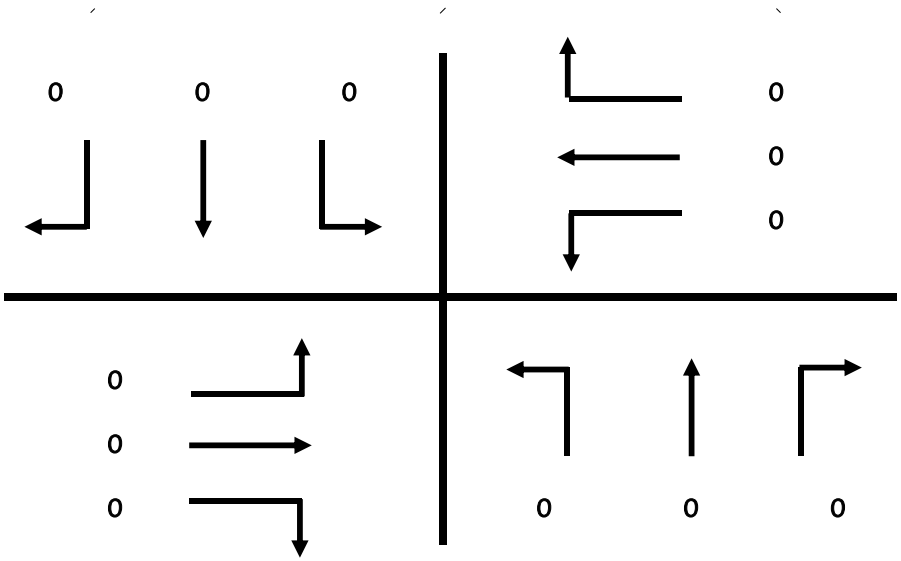

Pedestrian & Bicycle Summary

Project #: 62393
Date: 9/1/2015

NB/SB: Belle Terre Blvd
EB/WB: Zebulah's Trail (N)

Hour

		7:00	8:00		16:00	17:00				
		1	2	3	4	5	6	7	8	
Eastbound ▶	Bike	1	1		1	0				3
	Ped	0	0		0	0				0
Westbound ◀	Bike	0	0		0	0				0
	Ped	0	0		0	0				0

Hour	Southbound Ped ▼	Southbound Bike ▼	Northbound Ped ▲	Northbound Bike ▲
1 7:00	0	0	0	0
2 8:00	0	0	0	0
3				
4 16:00				
5 17:00				
6				
7				
8				
	0	0	0	0

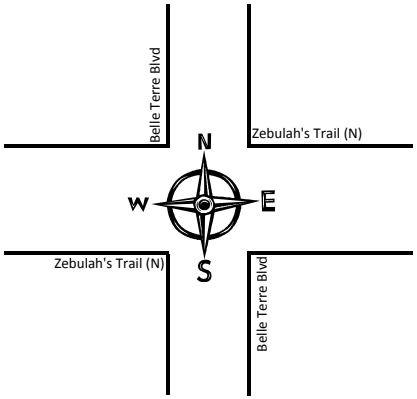

Hour	Southbound Ped ▼	Southbound Bike ▼	Northbound Ped ▲	Northbound Bike ▲
1 7:00	0	0	0	0
2 8:00	0	0	0	0
3				
4 16:00				
5 17:00				
6				
7				
8				
	0	0	0	0

		7:00	8:00		16:00	17:00				
		1	2	3	4	5	6	7	8	
Eastbound ▶	Bike	0	1		1	2				4
	Ped	0	0		1	1				2
Westbound ◀	Bike	0	0		0	0				0
	Ped	0	0		0	0				0

Hour

Roadway Count Summary

Vanasse Hangen Brustlin, Inc.

County	Flagler	**City**	Palm Coast
Intersection	Belle Terre Blvd	&	SR 100
Date	September 1, 2015		**All Vehicles**
Time Period	7:00 to 9:00		

VHB Project #: 62393

Time Period	Northbound Left	Northbound Through	Northbound Right	Southbound Left	Southbound Through	Southbound Right
7:00 - 7:15	7	18	32	120	29	22
7:15 - 7:30	7	27	40	151	28	32
7:30 - 7:45	14	22	57	168	30	48
7:45 - 8:00	16	30	54	126	27	66
8:00 - 8:15	9	30	13	87	23	56
8:15 - 8:30	22	29	27	93	21	65
8:30 - 8:45	10	37	30	130	24	61
8:45 - 9:00	13	18	27	94	24	47
	98	211	280	969	206	397

Time Period	Eastbound Left	Eastbound Through	Eastbound Right	Westbound Left	Westbound Through	Westbound Right
7:00 - 7:15	9	41	5	3	40	33
7:15 - 7:30	12	74	1	9	58	44
7:30 - 7:45	22	104	4	10	90	83
7:45 - 8:00	35	98	5	25	114	99
8:00 - 8:15	14	60	6	30	123	71
8:15 - 8:30	32	93	2	12	143	68
8:30 - 8:45	51	94	10	14	99	47
8:45 - 9:00	51	138	13	23	112	78
	226	702	46	126	779	523

North / South
Belle Terre Blvd

East / West
SR 100

Peak Hour
7:30 - 8:30

Peak Hour Factor
0.89

Total Pk Hr Voume
2,476

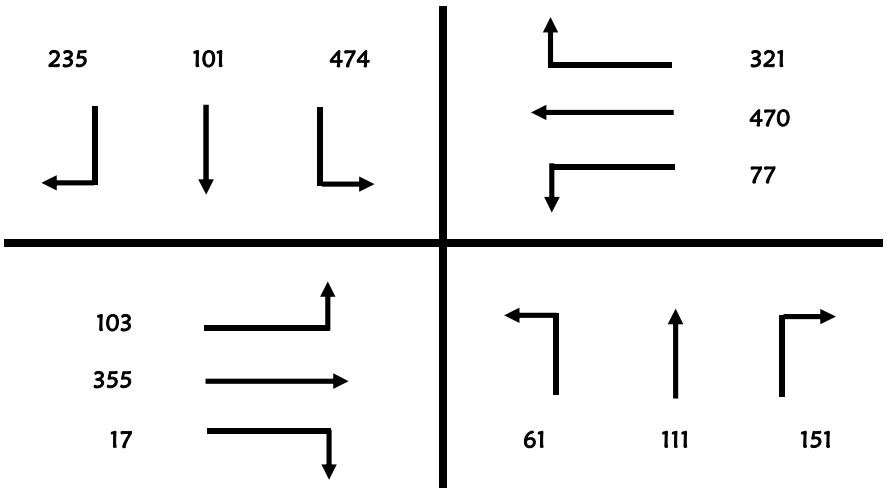

Roadway Count Summary

Vanasse Hangen Brustlin, Inc.

County	Flagler	**City**	Palm Coast
Intersection	Belle Terre Blvd	&	SR 100
Date	September 1, 2015		
Time Period	7:00 to 9:00		**Trucks**

VHB Project #: 62393

Time Period	Northbound			Southbound		
	Left	Through	Right	Left	Through	Right
7:00 - 7:15	0	0	1	5	0	0
7:15 - 7:30	1	2	0	25	0	1
7:30 - 7:45	1	1	1	9	0	0
7:45 - 8:00	0	1	0	1	0	0
8:00 - 8:15	1	0	0	2	1	0
8:15 - 8:30	2	0	1	2	1	0
8:30 - 8:45	0	1	1	7	1	0
8:45 - 9:00	0	2	1	15	0	0

Time Period	Eastbound			Westbound		
	Left	Through	Right	Left	Through	Right
7:00 - 7:15	1	4	0	0	2	0
7:15 - 7:30	0	9	0	1	4	0
7:30 - 7:45	5	9	0	1	3	0
7:45 - 8:00	4	6	0	1	5	8
8:00 - 8:15	0	5	0	4	5	9
8:15 - 8:30	1	3	0	1	10	5
8:30 - 8:45	3	4	2	0	4	1
8:45 - 9:00	2	20	0	1	9	0

North / South
Belle Terre Blvd

East / West
SR 100

Peak Hour
7:30 - 8:30

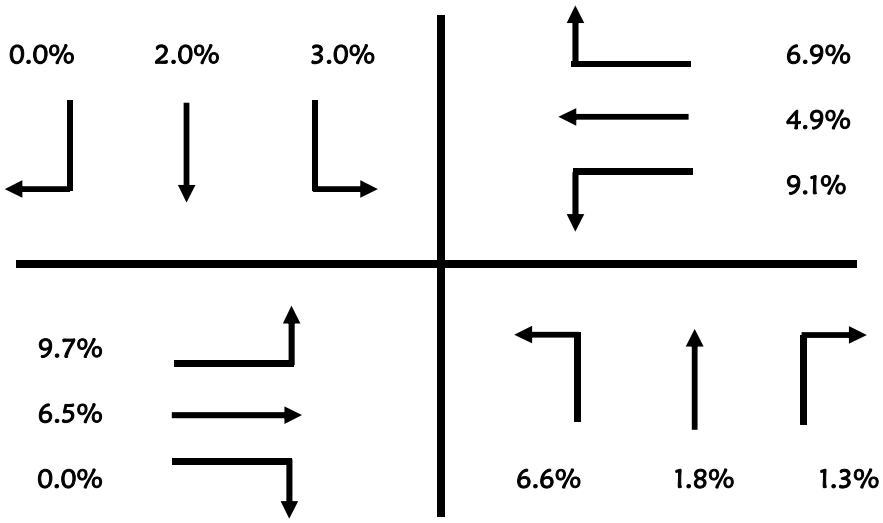

Roadway Count Summary

Vanasse Hangen Brustlin, Inc.

County	Flagler	**City**	Palm Coast
Intersection	Belle Terre Blvd	&	SR 100
Date	September 1, 2015		
Time Period	7:00 to 9:00		**U-Turn & RTOR**

VHB Project #: 62393

Time Period	Northbound Left	Northbound Through	Northbound Right	Southbound Left	Southbound Through	Southbound Right
7:00 - 7:15	0	0	6	0	0	12
7:15 - 7:30	0	0	7	0	0	13
7:30 - 7:45	0	0	21	0	0	9
7:45 - 8:00	0	0	15	0	0	20
8:00 - 8:15	0	0	6	0	0	32
8:15 - 8:30	0	0	9	0	0	26
8:30 - 8:45	0	0	0	0	0	31
8:45 - 9:00	0	0	7	0	0	28

Time Period	Eastbound Left	Eastbound Through	Eastbound Right	Westbound Left	Westbound Through	Westbound Right
7:00 - 7:15	0	0	3	0	0	24
7:15 - 7:30	0	0	0	1	0	34
7:30 - 7:45	0	0	3	0	0	48
7:45 - 8:00	0	0	5	0	0	55
8:00 - 8:15	0	0	3	2	0	16
8:15 - 8:30	0	0	1	0	0	38
8:30 - 8:45	0	0	8	2	0	24
8:45 - 9:00	0	0	9	1	0	34

North / South
Belle Terre Blvd

East / West
SR 100

Peak Hour
7:30 - 8:30

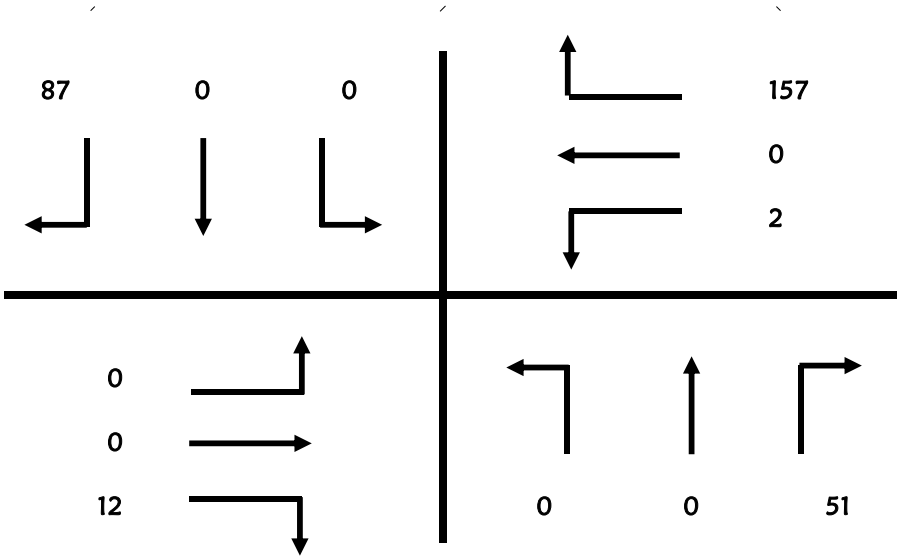

Roadway Count Summary

Vanasse Hangen Brustlin, Inc.

County	Flagler	**City**	Palm Coast
Intersection	Belle Terre Blvd	&	SR 100
Date	September 1, 2015		**All Vehicles**
Time Period	16:00 to 18:00		

VHB Project #: 62393

Time Period	Northbound Left	Northbound Through	Northbound Right	Southbound Left	Southbound Through	Southbound Right
16:00 - 16:15	7	30	16	66	29	41
16:15 - 16:30	9	40	31	68	25	42
16:30 - 16:45	11	41	18	66	29	42
16:45 - 17:00	7	56	19	58	25	56
17:00 - 17:15	10	44	19	61	25	55
17:15 - 17:30	8	29	13	85	34	57
17:30 - 17:45	5	35	25	66	23	52
17:45 - 18:00	11	40	28	73	35	68
	68	315	169	543	225	413

Time Period	Eastbound Left	Eastbound Through	Eastbound Right	Westbound Left	Westbound Through	Westbound Right
16:00 - 16:15	70	118	15	38	117	112
16:15 - 16:30	70	88	12	26	99	122
16:30 - 16:45	93	127	25	42	119	108
16:45 - 17:00	55	119	12	25	127	130
17:00 - 17:15	83	123	19	41	124	124
17:15 - 17:30	89	103	12	43	115	111
17:30 - 17:45	75	82	14	44	104	120
17:45 - 18:00	62	92	9	33	75	102
	597	852	118	292	880	929

North / South
Belle Terre Blvd

East / West
SR 100

Peak Hour
16:30 - 17:30

Peak Hour Factor
0.97

Total Pk Hr Voume
2,837

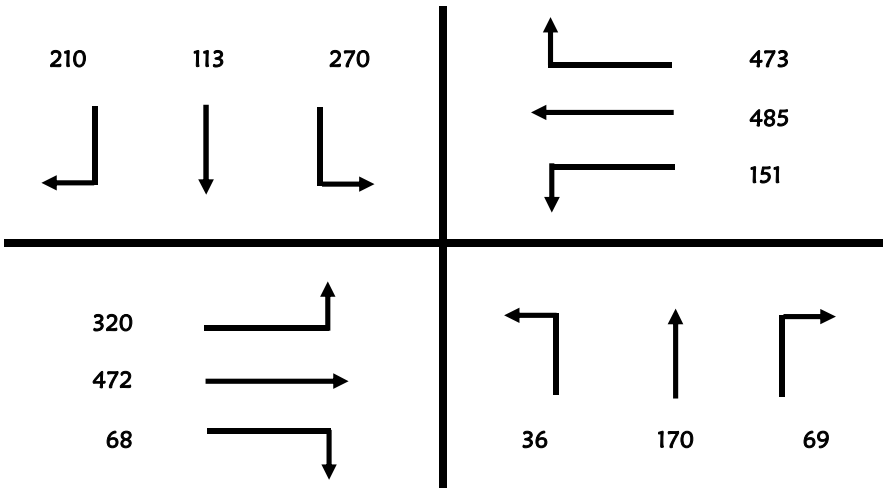

Roadway Count Summary

Vanasse Hangen Brustlin, Inc.

County	Flagler	**City**	Palm Coast
Intersection	Belle Terre Blvd	&	SR 100
Date	September 1, 2015		
Time Period	16:00 to 18:00		**Trucks**

VHB Project #: 62393

Time Period	Northbound			Southbound		
	Left	Through	Right	Left	Through	Right
16:00 - 16:15	0	1	1	7	1	1
16:15 - 16:30	1	1	0	1	0	0
16:30 - 16:45	0	0	0	3	2	0
16:45 - 17:00	0	0	0	3	0	0
17:00 - 17:15	0	0	0	3	0	0
17:15 - 17:30	0	0	0	1	1	2
17:30 - 17:45	0	0	0	1	2	0
17:45 - 18:00	0	0	0	0	1	1

Time Period	Eastbound			Westbound		
	Left	Through	Right	Left	Through	Right
16:00 - 16:15	0	2	0	0	6	1
16:15 - 16:30	1	4	0	0	2	1
16:30 - 16:45	1	3	0	0	5	0
16:45 - 17:00	2	2	0	1	5	1
17:00 - 17:15	0	3	0	1	5	1
17:15 - 17:30	0	2	0	0	4	0
17:30 - 17:45	2	1	0	1	2	0
17:45 - 18:00	0	1	0	0	1	0

North / South
Belle Terre Blvd

East / West
SR 100

Peak Hour
16:30 - 17:30

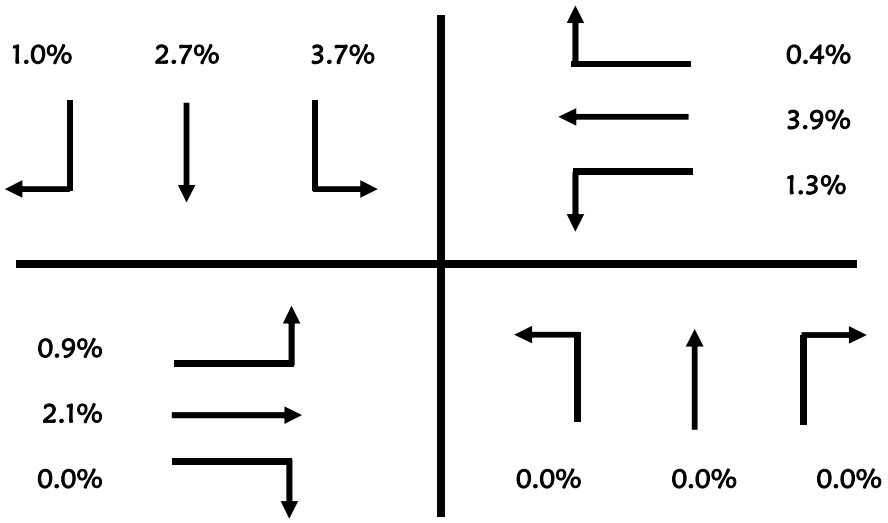

Roadway Count Summary

Vanasse Hangen Brustlin, Inc.

County	Flagler	**City**	Palm Coast
Intersection	Belle Terre Blvd	&	SR 100
Date	September 1, 2015		
Time Period	16:00 to 18:00		**U-Turn & RTOR**

VHB Project #: 62393

Time Period	Northbound Left	Northbound Through	Northbound Right	Southbound Left	Southbound Through	Southbound Right
16:00 - 16:15	0	0	1	0	0	23
16:15 - 16:30	0	0	11	0	0	29
16:30 - 16:45	0	0	4	0	0	30
16:45 - 17:00	0	0	5	0	0	29
17:00 - 17:15	0	0	1	0	0	22
17:15 - 17:30	0	0	4	0	0	39
17:30 - 17:45	0	0	5	0	0	28
17:45 - 18:00	0	0	6	0	0	38

Time Period	Eastbound Left	Eastbound Through	Eastbound Right	Westbound Left	Westbound Through	Westbound Right
16:00 - 16:15	1	0	10	5	0	52
16:15 - 16:30	0	0	7	0	0	62
16:30 - 16:45	1	0	7	3	0	38
16:45 - 17:00	1	0	6	2	0	63
17:00 - 17:15	0	0	4	1	0	52
17:15 - 17:30	0	0	3	3	0	57
17:30 - 17:45	0	0	2	2	0	59
17:45 - 18:00	0	0	2	2	0	44

North / South
Belle Terre Blvd

East / West
SR 100

Peak Hour
16:30 - 17:30

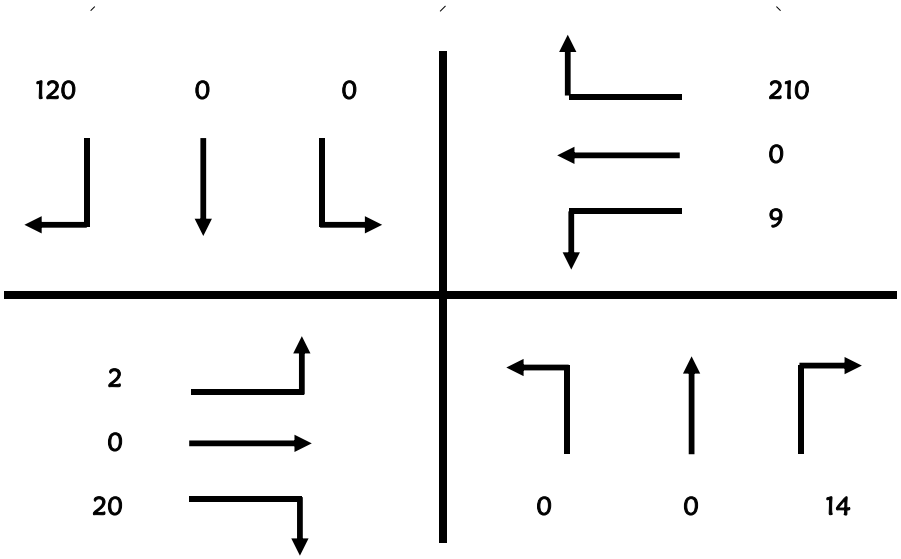

Pedestrian & Bicycle Summary

Project #: 62393 **NB/SB:** Belle Terre Blvd

Date: 9/1/2015 **EB/WB:** SR 100

Hour

		7:00	8:00		16:00	17:00				
		1	2	3	4	5	6	7	8	
Eastbound ▶	Bike	1	0		0	0				1
	Ped	3	1		1	0				5
Westbound ◀	Bike	0	0		0	0				0
	Ped	0	0		0	0				0

Hour	Southbound Ped ▼	Southbound Bike ▼	Northbound Ped ▲	Northbound Bike ▲
1 7:00	0	2	0	0
2 8:00	1	0	0	0
3				
4 16:00	4	5	0	0
5 17:00	4	3	0	0
6				
7				
8				
	9	10	0	0

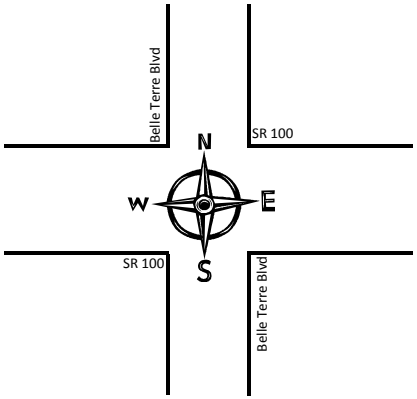

Hour	Southbound Ped ▼	Southbound Bike ▼	Northbound Ped ▲	Northbound Bike ▲
1 7:00	8	5	0	0
2 8:00	0	1	0	0
3				
4 16:00	2	1	0	0
5 17:00	0	3	0	0
6				
7				
8				
	10	10	0	0

		7:00	8:00		16:00	17:00				
		1	2	3	4	5	6	7	8	
Eastbound ▶	Bike	0	0		1	1				2
	Ped	0	0		1	1				2
Westbound ◀	Bike	0	0		0	0				0
	Ped	0	0		0	0				0

Hour

Roadway Count Summary

Vanasse Hangen Brustlin, Inc.

County	Flagler	**City**	Palm Coast
Intersection	Belle Terre Blvd	&	Eastwood Dr
Date	September 1, 2015		**All Vehicles**
Time Period	7:00 to 9:00		

VHB Project #: 62393

Time Period	Northbound Left	Northbound Through	Northbound Right	Southbound Left	Southbound Through	Southbound Right
7:00 - 7:15	3	61	0	0	182	1
7:15 - 7:30	1	86	0	0	225	2
7:30 - 7:45	2	125	0	0	284	1
7:45 - 8:00	7	155	0	0	272	1
8:00 - 8:15	1	120	0	0	186	0
8:15 - 8:30	5	126	0	0	192	1
8:30 - 8:45	2	141	0	0	223	2
8:45 - 9:00	5	144	0	0	224	0
	26	958	0	0	1,788	8

Time Period	Eastbound Left	Eastbound Through	Eastbound Right	Westbound Left	Westbound Through	Westbound Right
7:00 - 7:15	4	0	6	0	0	0
7:15 - 7:30	3	0	5	0	0	0
7:30 - 7:45	2	0	9	0	0	0
7:45 - 8:00	2	0	5	0	0	0
8:00 - 8:15	1	0	4	0	0	0
8:15 - 8:30	0	0	6	0	0	0
8:30 - 8:45	1	0	6	0	0	0
8:45 - 9:00	1	0	7	0	0	0
	14	0	48	0	0	0

North / South
Belle Terre Blvd

East / West
Eastwood Dr

Peak Hour
7:30 - 8:30

Peak Hour Factor
0.85

Total Pk Hr Voume
1,507

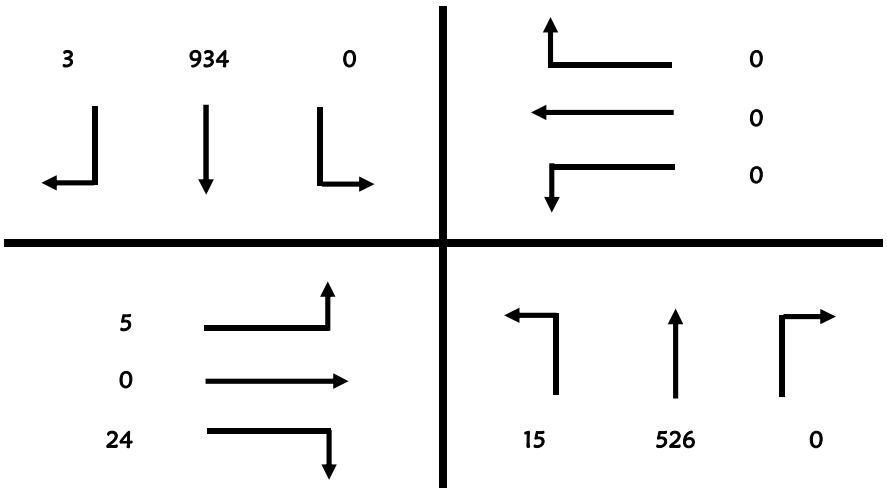

Roadway Count Summary

Vanasse Hangen Brustlin, Inc.

County	Flagler	**City**	Palm Coast
Intersection	Belle Terre Blvd	&	Eastwood Dr
Date	September 1, 2015		
Time Period	7:00 to 9:00		**Trucks**

VHB Project #: 62393

Time Period	Northbound			Southbound		
	Left	Through	Right	Left	Through	Right
7:00 - 7:15	0	5	0	0	7	0
7:15 - 7:30	0	3	0	0	24	0
7:30 - 7:45	0	7	0	0	9	0
7:45 - 8:00	1	14	0	0	2	0
8:00 - 8:15	0	11	0	0	4	0
8:15 - 8:30	1	9	0	0	4	0
8:30 - 8:45	0	3	0	0	6	0
8:45 - 9:00	0	5	0	0	18	0

Time Period	Eastbound			Westbound		
	Left	Through	Right	Left	Through	Right
7:00 - 7:15	1	0	0	0	0	0
7:15 - 7:30	0	0	0	0	0	0
7:30 - 7:45	0	0	0	0	0	0
7:45 - 8:00	0	0	0	0	0	0
8:00 - 8:15	0	0	0	0	0	0
8:15 - 8:30	0	0	1	0	0	0
8:30 - 8:45	0	0	0	0	0	0
8:45 - 9:00	0	0	0	0	0	0

North / South
Belle Terre Blvd

East / West
Eastwood Dr

Peak Hour
7:30 - 8:30

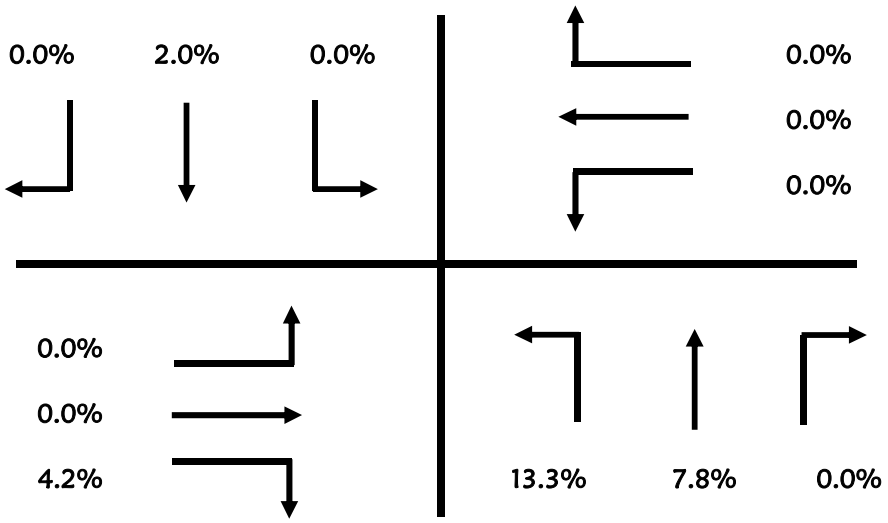

Roadway Count Summary

Vanasse Hangen Brustlin, Inc.

County	Flagler	**City**	Palm Coast
Intersection	Belle Terre Blvd	&	Eastwood Dr
Date	September 1, 2015		
Time Period	7:00 to 9:00		**U-Turn & RTOR**

VHB Project #: 62393

Time Period	Northbound			Southbound		
	Left	Through	Right	Left	Through	Right
7:00 - 7:15	1	0	0	0	0	0
7:15 - 7:30	0	0	0	0	0	0
7:30 - 7:45	0	0	0	0	0	0
7:45 - 8:00	0	0	0	0	0	0
8:00 - 8:15	0	0	0	0	0	0
8:15 - 8:30	1	0	0	0	0	0
8:30 - 8:45	0	0	0	0	0	0
8:45 - 9:00	1	0	0	0	0	0

Time Period	Eastbound			Westbound		
	Left	Through	Right	Left	Through	Right
7:00 - 7:15	0	0	0	0	0	0
7:15 - 7:30	0	0	0	0	0	0
7:30 - 7:45	0	0	0	0	0	0
7:45 - 8:00	0	0	0	0	0	0
8:00 - 8:15	0	0	0	0	0	0
8:15 - 8:30	0	0	0	0	0	0
8:30 - 8:45	0	0	0	0	0	0
8:45 - 9:00	0	0	0	0	0	0

North / South
Belle Terre Blvd

East / West
Eastwood Dr

Peak Hour
7:30 - 8:30

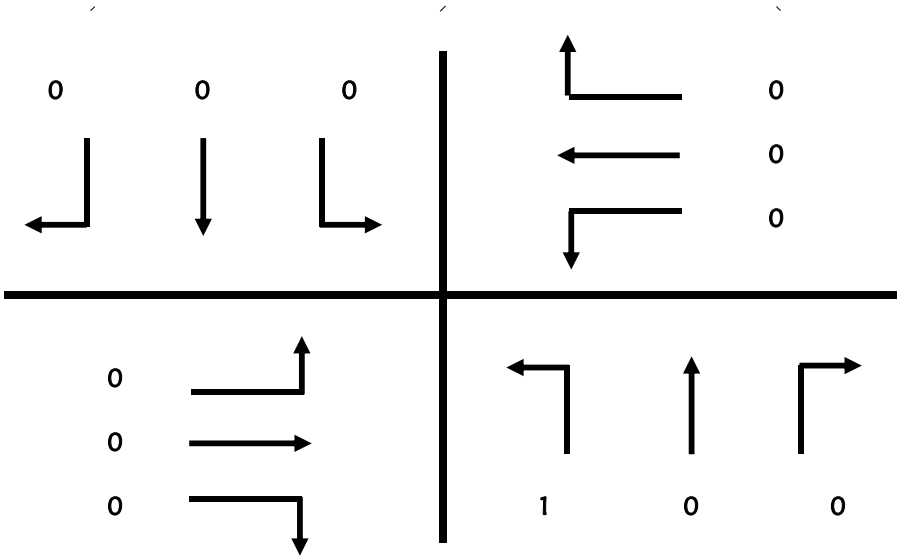

Roadway Count Summary

Vanasse Hangen Brustlin, Inc.

County	Flagler	**City**	Palm Coast
Intersection	Belle Terre Blvd	&	Eastwood Dr
Date	September 1, 2015		**All Vehicles**
Time Period	16:00 to 18:00		

VHB Project #: 62393

Time Period	Northbound Left	Northbound Through	Northbound Right	Southbound Left	Southbound Through	Southbound Right
16:00 - 16:15	7	238	0	0	183	2
16:15 - 16:30	9	261	0	0	172	2
16:30 - 16:45	3	267	0	0	187	1
16:45 - 17:00	11	270	0	0	182	4
17:00 - 17:15	7	295	0	0	181	2
17:15 - 17:30	10	257	0	0	209	1
17:30 - 17:45	8	279	0	0	191	4
17:45 - 18:00	6	241	0	0	227	4
	61	2,108	0	0	1,532	20

Time Period	Eastbound Left	Eastbound Through	Eastbound Right	Westbound Left	Westbound Through	Westbound Right
16:00 - 16:15	0	0	10	0	0	0
16:15 - 16:30	2	0	5	0	0	0
16:30 - 16:45	1	0	4	0	0	0
16:45 - 17:00	2	0	7	0	0	0
17:00 - 17:15	2	0	3	0	0	0
17:15 - 17:30	1	0	5	0	0	0
17:30 - 17:45	2	0	8	0	0	0
17:45 - 18:00	2	0	2	0	0	0
	12	0	44	0	0	0

North / South
Belle Terre Blvd

East / West
Eastwood Dr

Peak Hour
17:00 - 18:00

Peak Hour Factor
0.99

Total Pk Hr Voume
1,947

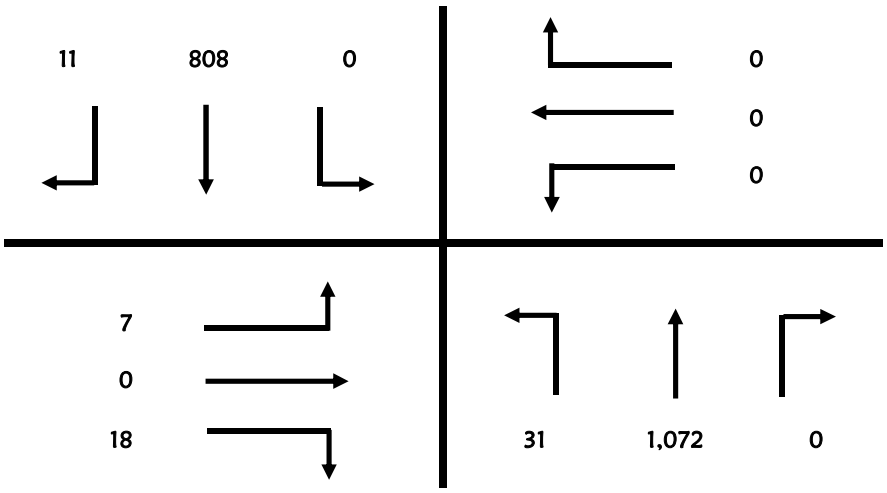

Roadway Count Summary

Vanasse Hangen Brustlin, Inc.

County	Flagler	**City**	Palm Coast
Intersection	Belle Terre Blvd	&	Eastwood Dr
Date	September 1, 2015		
Time Period	16:00 to 18:00		**Trucks**

VHB Project #: 62393

Time Period	Northbound			Southbound		
	Left	Through	Right	Left	Through	Right
16:00 - 16:15	0	4	0	0	7	0
16:15 - 16:30	0	3	0	0	1	0
16:30 - 16:45	0	1	0	0	9	0
16:45 - 17:00	0	4	0	0	3	0
17:00 - 17:15	0	1	0	0	1	0
17:15 - 17:30	0	0	0	0	4	0
17:30 - 17:45	0	4	0	0	2	0
17:45 - 18:00	0	1	0	0	2	0

Time Period	Eastbound			Westbound		
	Left	Through	Right	Left	Through	Right
16:00 - 16:15	0	0	0	0	0	0
16:15 - 16:30	0	0	0	0	0	0
16:30 - 16:45	0	0	0	0	0	0
16:45 - 17:00	0	0	0	0	0	0
17:00 - 17:15	0	0	0	0	0	0
17:15 - 17:30	0	0	1	0	0	0
17:30 - 17:45	0	0	1	0	0	0
17:45 - 18:00	0	0	0	0	0	0

North / South
Belle Terre Blvd

East / West
Eastwood Dr

Peak Hour
17:00 - 18:00

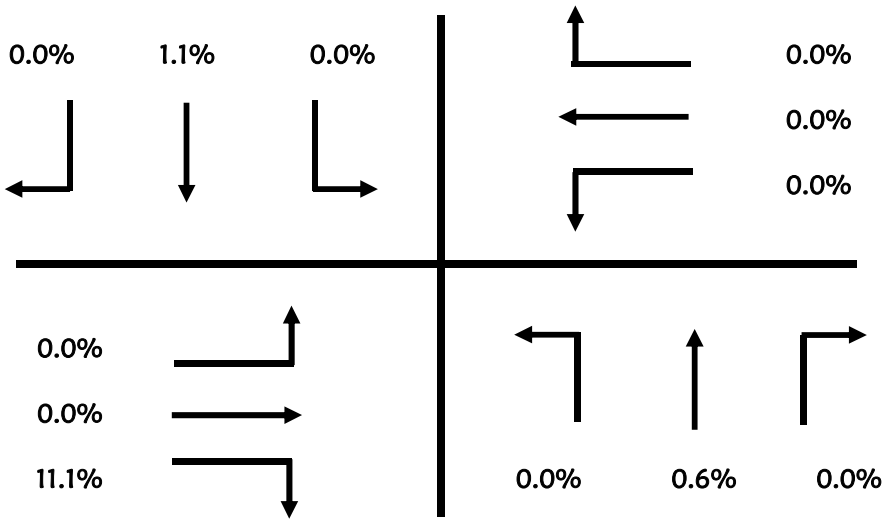

Roadway Count Summary

Vanasse Hangen Brustlin, Inc.

County	Flagler	**City**	Palm Coast
Intersection	Belle Terre Blvd	&	Eastwood Dr
Date	September 1, 2015		
Time Period	16:00 to 18:00		**U-Turn & RTOR**

VHB Project #: 62393

Time Period	Northbound			Southbound		
	Left	Through	Right	Left	Through	Right
16:00 - 16:15	2	0	0	0	0	0
16:15 - 16:30	2	0	0	0	0	0
16:30 - 16:45	1	0	0	0	0	0
16:45 - 17:00	2	0	0	0	0	0
17:00 - 17:15	1	0	0	0	0	0
17:15 - 17:30	4	0	0	0	0	0
17:30 - 17:45	1	0	0	0	0	0
17:45 - 18:00	0	0	0	0	0	0

Time Period	Eastbound			Westbound		
	Left	Through	Right	Left	Through	Right
16:00 - 16:15	0	0	0	0	0	0
16:15 - 16:30	0	0	0	0	0	0
16:30 - 16:45	0	0	0	0	0	0
16:45 - 17:00	0	0	0	0	0	0
17:00 - 17:15	0	0	0	0	0	0
17:15 - 17:30	0	0	0	0	0	0
17:30 - 17:45	0	0	0	0	0	0
17:45 - 18:00	0	0	0	0	0	0

North / South
Belle Terre Blvd

East / West
Eastwood Dr

Peak Hour
17:00 - 18:00

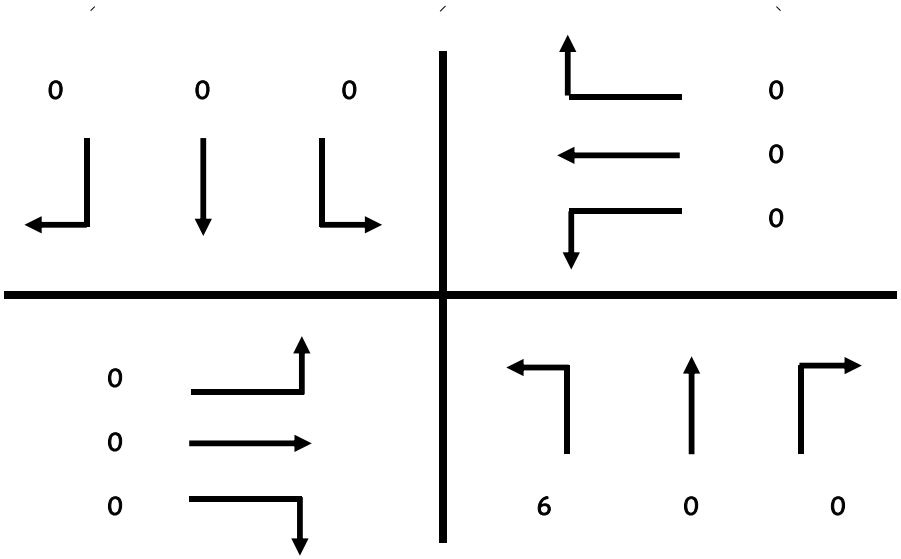

Pedestrian & Bicycle Summary

Project #: 62393 **NB/SB:** Belle Terre Blvd

Date: 9/1/2015 **EB/WB:** Eastwood Dr

Hour

		7:00	8:00		16:00	17:00				
		1	2	3	4	5	6	7	8	
Eastbound ▶	Bike	3	1		2	2				8
	Ped	0	0		0	0				0
Westbound ◀	Bike	0	0		0	0				0
	Ped	0	0		0	0				0

		Southbound		**Northbound**	
	Hour	Ped ▼	Bike	Ped ▲	Bike
1	7:00	0	0	0	0
2	8:00	0	0	0	0
3					
4	16:00	0	0	0	0
5	17:00	0	0	0	0
6					
7					
8					
		0	0	0	0

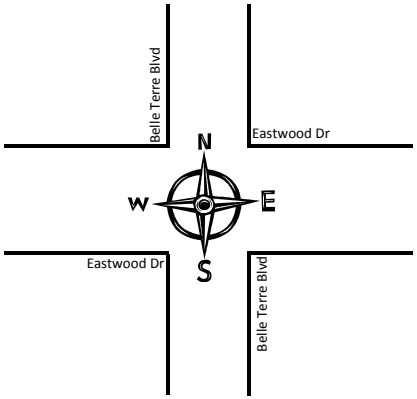

		Southbound		**Northbound**		
		Ped ▼	Bike	Ped ▲	Bike	Hour
1		0	0	0	0	7:00
2		0	0	0	0	8:00
3						
4		0	0	0	0	16:00
5		0	0	0	0	17:00
6						
7						
8						
		0	0	0	0	

		7:00	8:00		16:00	17:00				
		1	2	3	4	5	6	7	8	
Eastbound ▶	Bike	1	3		1	2				7
	Ped	0	0		0	0				0
Westbound ◀	Bike	0	0		0	0				0
	Ped	0	0		0	0				0

Hour

Roadway Count Summary

Vanasse Hangen Brustlin, Inc.

County	Flagler	**City**	Palm Coast
Intersection	Belle Terre Blvd	&	Market Ave
Date	September 1, 2015		**All Vehicles**
Time Period	7:00 to 9:00		

VHB Project #: 62393

Time Period	Northbound Left	Northbound Through	Northbound Right	Southbound Left	Southbound Through	Southbound Right
7:00 - 7:15	2	79	2	0	173	1
7:15 - 7:30	0	78	4	4	229	3
7:30 - 7:45	2	110	9	10	276	3
7:45 - 8:00	0	139	11	7	258	3
8:00 - 8:15	0	125	9	3	182	1
8:15 - 8:30	0	120	6	3	176	5
8:30 - 8:45	1	124	10	3	236	2
8:45 - 9:00	0	129	11	4	203	4
	5	904	62	34	1,733	22

Time Period	Eastbound Left	Eastbound Through	Eastbound Right	Westbound Left	Westbound Through	Westbound Right
7:00 - 7:15	2	0	0	1	0	1
7:15 - 7:30	4	0	0	9	1	1
7:30 - 7:45	3	1	2	4	0	0
7:45 - 8:00	4	1	3	8	1	6
8:00 - 8:15	4	1	0	4	0	1
8:15 - 8:30	5	0	1	7	2	1
8:30 - 8:45	3	0	1	6	0	2
8:45 - 9:00	9	0	1	9	0	3
	34	3	8	48	4	15

North / South
Belle Terre Blvd

East / West
Market Ave

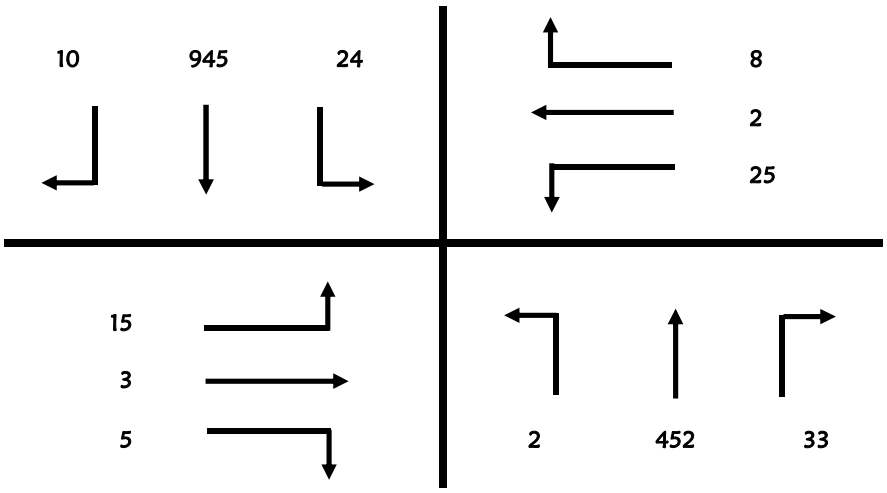

Peak Hour
7:15 - 8:15

Peak Hour Factor
0.86

Total Pk Hr Voume
1,524

Roadway Count Summary

Vanasse Hangen Brustlin, Inc.

County	Flagler	**City**	Palm Coast
Intersection	Belle Terre Blvd	&	Market Ave
Date	September 1, 2015		
Time Period	7:00 to 9:00		**Trucks**

VHB Project #: 62393

Time Period	Northbound			Southbound		
	Left	Through	Right	Left	Through	Right
7:00 - 7:15	0	7	0	0	6	0
7:15 - 7:30	0	2	1	0	22	0
7:30 - 7:45	0	5	2	1	9	0
7:45 - 8:00	0	11	4	0	2	0
8:00 - 8:15	0	9	1	0	4	0
8:15 - 8:30	0	8	1	0	1	1
8:30 - 8:45	0	3	1	0	9	0
8:45 - 9:00	0	4	1	0	18	0

Time Period	Eastbound			Westbound		
	Left	Through	Right	Left	Through	Right
7:00 - 7:15	0	0	0	1	0	0
7:15 - 7:30	0	0	0	1	0	1
7:30 - 7:45	0	0	0	0	0	0
7:45 - 8:00	1	0	0	0	0	2
8:00 - 8:15	0	0	0	0	0	0
8:15 - 8:30	0	0	0	0	0	0
8:30 - 8:45	0	0	0	0	0	0
8:45 - 9:00	0	0	0	0	0	1

North / South
Belle Terre Blvd

East / West
Market Ave

Peak Hour
7:15 - 8:15

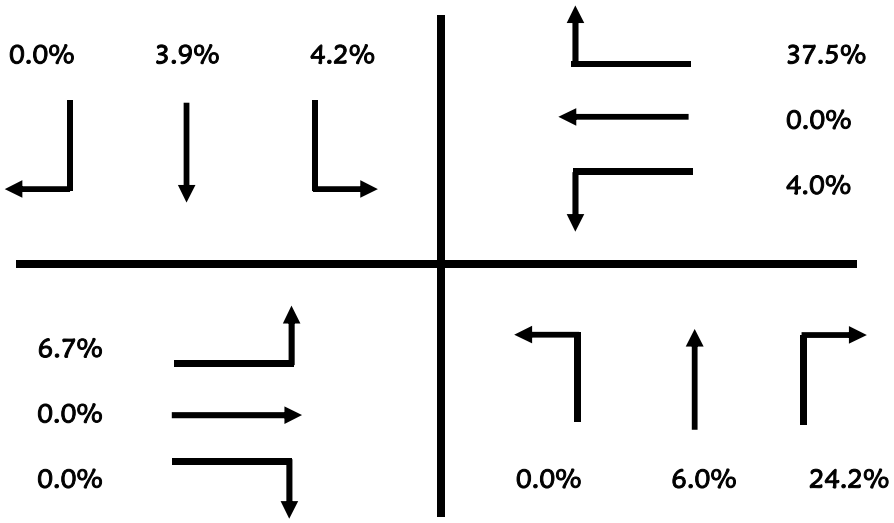

Roadway Count Summary

Vanasse Hangen Brustlin, Inc.

County	Flagler	**City**	Palm Coast
Intersection	Belle Terre Blvd	&	Market Ave
Date	September 1, 2015		
Time Period	7:00 to 9:00		**U-Turn & RTOR**

VHB Project #: 62393

Time Period	Northbound			Southbound		
	Left	Through	Right	Left	Through	Right
7:00 - 7:15	2	0	0	0	0	0
7:15 - 7:30	0	0	0	0	0	0
7:30 - 7:45	1	0	0	0	0	0
7:45 - 8:00	0	0	0	0	0	0
8:00 - 8:15	0	0	0	0	0	0
8:15 - 8:30	0	0	0	0	0	0
8:30 - 8:45	1	0	0	0	0	0
8:45 - 9:00	0	0	0	0	0	0

Time Period	Eastbound			Westbound		
	Left	Through	Right	Left	Through	Right
7:00 - 7:15	0	0	0	0	0	0
7:15 - 7:30	0	0	0	0	0	0
7:30 - 7:45	0	0	0	0	0	0
7:45 - 8:00	0	0	0	0	0	0
8:00 - 8:15	0	0	0	0	0	0
8:15 - 8:30	0	0	0	0	0	0
8:30 - 8:45	0	0	0	0	0	0
8:45 - 9:00	0	0	0	0	0	0

North / South
Belle Terre Blvd

East / West
Market Ave

Peak Hour
7:15 - 8:15

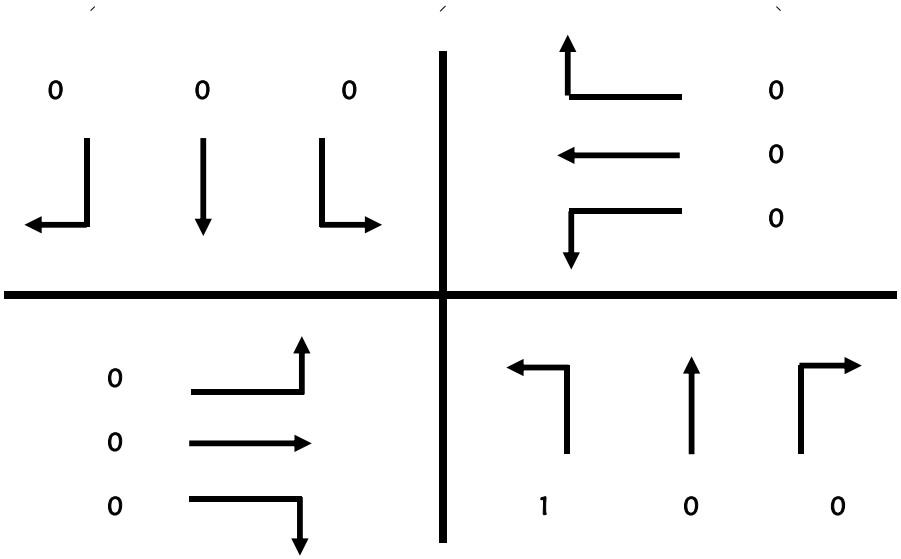

Roadway Count Summary

Vanasse Hangen Brustlin, Inc.

County	Flagler	**City**	Palm Coast
Intersection	Belle Terre Blvd	&	Market Ave
Date	September 1, 2015		**All Vehicles**
Time Period	16:00 to 18:00		

VHB Project #: 62393

Time Period	Northbound Left	Northbound Through	Northbound Right	Southbound Left	Southbound Through	Southbound Right
16:00 - 16:15	0	230	12	4	134	1
16:15 - 16:30	0	246	9	3	172	3
16:30 - 16:45	0	252	11	2	169	3
16:45 - 17:00	0	268	11	7	181	8
17:00 - 17:15	0	268	7	1	166	3
17:15 - 17:30	0	255	11	1	194	4
17:30 - 17:45	0	274	15	2	188	6
17:45 - 18:00	0	234	12	5	191	1
	0	2,027	88	25	1,395	29

Time Period	Eastbound Left	Eastbound Through	Eastbound Right	Westbound Left	Westbound Through	Westbound Right
16:00 - 16:15	1	1	2	31	0	8
16:15 - 16:30	4	0	0	13	3	3
16:30 - 16:45	2	0	0	19	0	3
16:45 - 17:00	2	0	0	11	1	6
17:00 - 17:15	0	0	0	13	1	3
17:15 - 17:30	7	0	2	15	0	6
17:30 - 17:45	6	0	0	22	1	7
17:45 - 18:00	3	0	4	22	1	6
	25	1	8	146	7	42

North / South
Belle Terre Blvd

East / West
Market Ave

Peak Hour
16:45 - 17:45

Peak Hour Factor
0.95

Total Pk Hr Voume
1,973

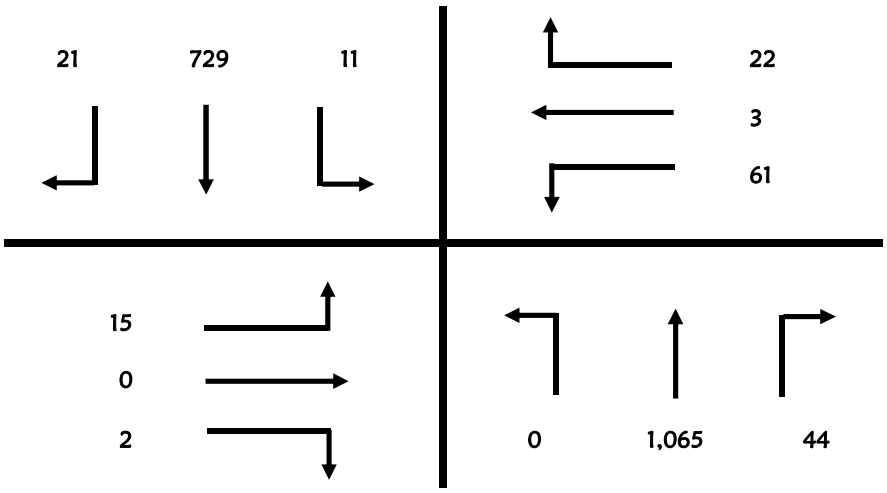

Roadway Count Summary

Vanasse Hangen Brustlin, Inc.

County	Flagler	**City**	Palm Coast
Intersection	Belle Terre Blvd	&	Market Ave
Date	September 1, 2015		
Time Period	16:00 to 18:00		**Trucks**

VHB Project #: 62393

Time Period	Northbound			Southbound		
	Left	Through	Right	Left	Through	Right
16:00 - 16:15	0	4	0	0	7	0
16:15 - 16:30	0	3	0	0	1	0
16:30 - 16:45	0	1	0	0	7	0
16:45 - 17:00	0	4	0	0	4	0
17:00 - 17:15	0	0	0	0	2	0
17:15 - 17:30	0	0	0	0	5	1
17:30 - 17:45	0	3	1	0	2	2
17:45 - 18:00	0	1	0	0	1	0

Time Period	Eastbound			Westbound		
	Left	Through	Right	Left	Through	Right
16:00 - 16:15	0	0	0	1	0	0
16:15 - 16:30	0	0	0	0	0	0
16:30 - 16:45	0	0	0	1	0	0
16:45 - 17:00	0	0	0	0	0	0
17:00 - 17:15	0	0	0	0	0	0
17:15 - 17:30	0	0	0	0	0	0
17:30 - 17:45	0	0	0	0	0	0
17:45 - 18:00	0	0	1	0	0	1

North / South
Belle Terre Blvd

East / West
Market Ave

Peak Hour
16:45 - 17:45

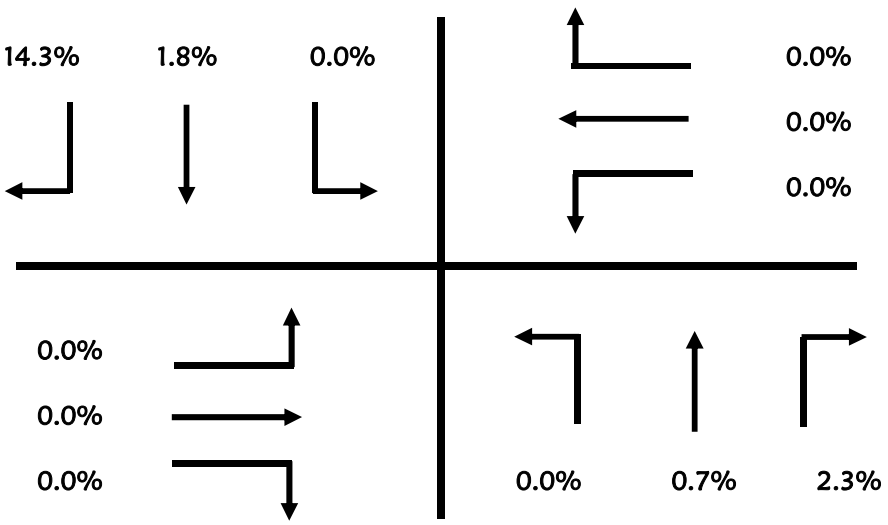

Roadway Count Summary

Vanasse Hangen Brustlin, Inc.

County	Flagler	**City**	Palm Coast
Intersection	Belle Terre Blvd	&	Market Ave
Date	September 1, 2015		
Time Period	16:00 to 18:00		**U-Turn & RTOR**

VHB Project #: 62393

Time Period	Northbound			Southbound		
	Left	Through	Right	Left	Through	Right
16:00 - 16:15	0	0	0	0	0	0
16:15 - 16:30	0	0	0	0	0	0
16:30 - 16:45	0	0	0	1	0	0
16:45 - 17:00	0	0	0	0	0	0
17:00 - 17:15	0	0	0	0	0	0
17:15 - 17:30	0	0	0	0	0	0
17:30 - 17:45	0	0	0	0	0	0
17:45 - 18:00	0	0	0	0	0	0

Time Period	Eastbound			Westbound		
	Left	Through	Right	Left	Through	Right
16:00 - 16:15	0	0	0	0	0	0
16:15 - 16:30	0	0	0	0	0	0
16:30 - 16:45	0	0	0	0	0	0
16:45 - 17:00	0	0	0	0	0	0
17:00 - 17:15	0	0	0	0	0	0
17:15 - 17:30	0	0	0	0	0	0
17:30 - 17:45	0	0	0	0	0	0
17:45 - 18:00	0	0	0	0	0	0

North / South
Belle Terre Blvd

East / West
Market Ave

Peak Hour
16:45 - 17:45

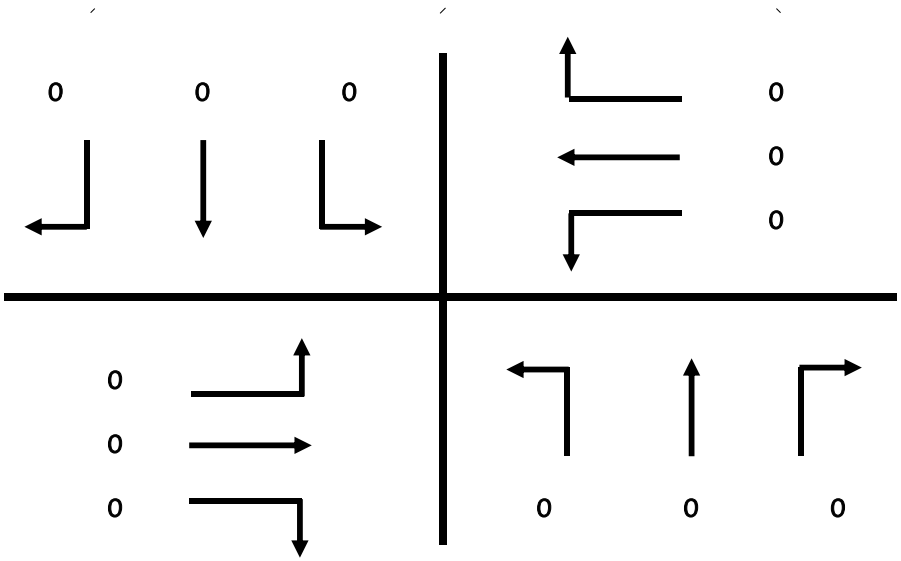

Pedestrian & Bicycle Summary

Project #: 62393 **NB/SB:** Belle Terre Blvd

Date: 9/1/2015 **EB/WB:** Market Ave

Hour

		7:00	8:00		16:00	17:00				
		1	2	3	4	5	6	7	8	
Eastbound ▶	Bike	0	1		2	1				4
	Ped	0	0		1	0				1
Westbound ◀	Bike	0	0		0	0				0
	Ped	0	0		0	0				0

Hour	Southbound Ped ▼	Southbound Bike ▼	Northbound Ped ▲	Northbound Bike ▲
1 7:00	0	0	0	0
2 8:00	0	1	0	0
3				
4 16:00	0	0	0	0
5 17:00	0	0	0	0
6				
7				
8				
	0	1	0	0

Hour	Southbound Ped ▼	Southbound Bike ▼	Northbound Ped ▲	Northbound Bike ▲
1 7:00	0	0	0	0
2 8:00	0	0	0	0
3				
4 16:00	0	1	0	0
5 17:00	0	0	0	1
6				
7				
8				
	0	1	0	1

		7:00	8:00		16:00	17:00				
		1	2	3	4	5	6	7	8	
Eastbound ▶	Bike	1	4		1	2				8
	Ped	0	0		0	0				0
Westbound ◀	Bike	0	0		0	0				0
	Ped	0	0		0	0				0

Hour

Roadway Count Summary

Vanasse Hangen Brustlin, Inc.

County	Flagler	**City**	Palm Coast
Intersection	Belle Terre Blvd		& Central Ave
Date	September 1, 2015		**All Vehicles**
Time Period	7:00 to 9:00		

VHB Project #: 62393

Time Period	Northbound Left	Northbound Through	Northbound Right	Southbound Left	Southbound Through	Southbound Right
7:00 - 7:15	7	53	1	30	144	9
7:15 - 7:30	7	73	1	47	230	17
7:30 - 7:45	13	110	2	76	248	10
7:45 - 8:00	19	133	0	29	208	12
8:00 - 8:15	15	104	0	22	150	20
8:15 - 8:30	17	110	0	29	157	22
8:30 - 8:45	21	101	2	29	191	19
8:45 - 9:00	22	113	1	29	210	20
	121	797	7	291	1,538	129

Time Period	Eastbound Left	Eastbound Through	Eastbound Right	Westbound Left	Westbound Through	Westbound Right
7:00 - 7:15	28	12	41	0	1	6
7:15 - 7:30	23	8	29	0	5	16
7:30 - 7:45	39	13	48	2	2	28
7:45 - 8:00	34	15	37	2	5	26
8:00 - 8:15	36	10	32	7	7	11
8:15 - 8:30	34	10	41	1	2	26
8:30 - 8:45	38	6	39	7	6	19
8:45 - 9:00	37	7	42	2	8	17
	269	81	309	21	36	149

North / South
Belle Terre Blvd

East / West
Central Ave

Peak Hour
7:15 - 8:15

Peak Hour Factor
0.84

Total Pk Hr Voume
1,981

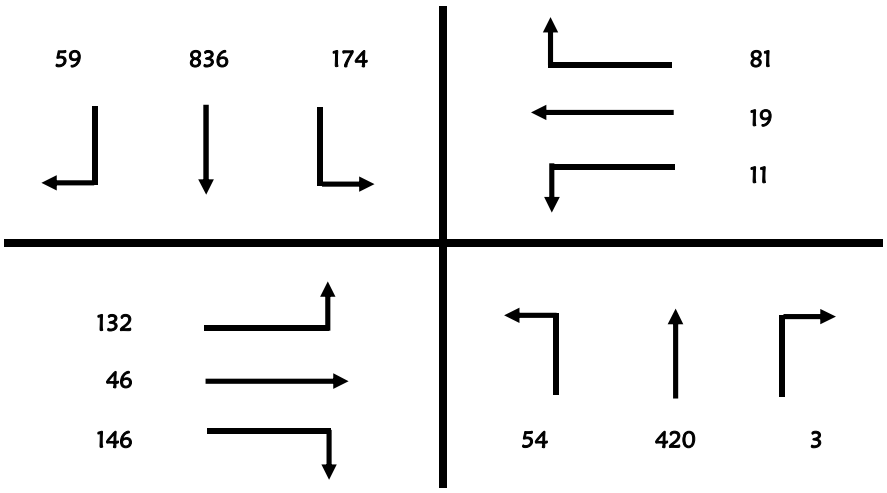

Roadway Count Summary

Vanasse Hangen Brustlin, Inc.

County	Flagler	**City**	Palm Coast
Intersection	Belle Terre Blvd	&	Central Ave
Date	September 1, 2015		
Time Period	7:00 to 9:00		**Trucks**

VHB Project #: 62393

Time Period	Northbound			Southbound		
	Left	Through	Right	Left	Through	Right
7:00 - 7:15	1	6	0	0	5	0
7:15 - 7:30	1	3	0	2	27	2
7:30 - 7:45	1	8	0	1	4	0
7:45 - 8:00	2	13	0	0	1	0
8:00 - 8:15	1	9	0	0	4	0
8:15 - 8:30	0	9	0	0	4	0
8:30 - 8:45	3	1	0	0	7	2
8:45 - 9:00	1	5	0	1	16	0

Time Period	Eastbound			Westbound		
	Left	Through	Right	Left	Through	Right
7:00 - 7:15	1	0	1	0	0	0
7:15 - 7:30	0	0	1	0	0	0
7:30 - 7:45	0	0	1	0	0	0
7:45 - 8:00	3	0	0	0	0	0
8:00 - 8:15	1	0	0	0	0	0
8:15 - 8:30	0	0	0	0	0	1
8:30 - 8:45	1	0	0	0	0	0
8:45 - 9:00	0	0	0	0	0	1

North / South
Belle Terre Blvd

East / West
Central Ave

Peak Hour
7:15 - 8:15

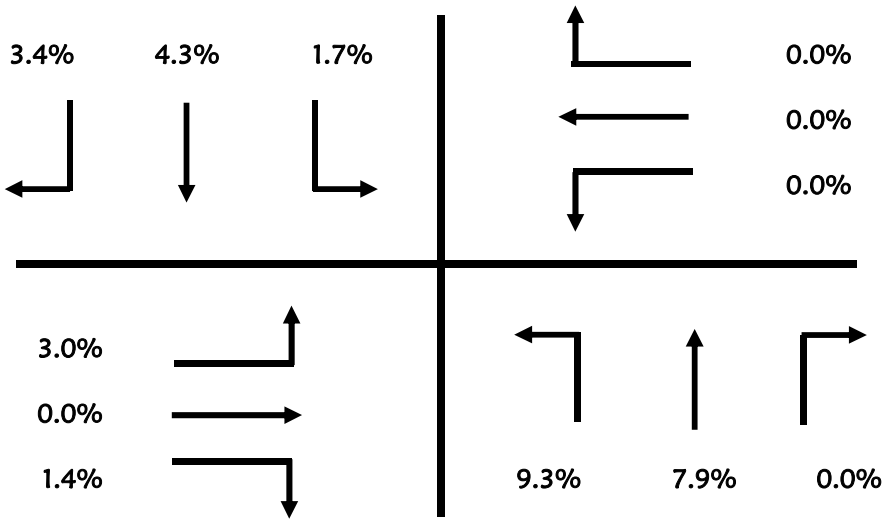

Roadway Count Summary

Vanasse Hangen Brustlin, Inc.

County	Flagler	**City**	Palm Coast
Intersection	Belle Terre Blvd	&	Central Ave
Date	September 1, 2015		
Time Period	7:00 to 9:00		**U-Turn & RTOR**

VHB Project #: 62393

Time Period	Northbound			Southbound		
	Left	Through	Right	Left	Through	Right
7:00 - 7:15	0	0	1	0	0	2
7:15 - 7:30	0	0	0	1	0	3
7:30 - 7:45	0	0	1	0	0	4
7:45 - 8:00	0	0	0	0	0	5
8:00 - 8:15	2	0	0	1	0	5
8:15 - 8:30	3	0	0	0	0	10
8:30 - 8:45	0	0	1	0	0	6
8:45 - 9:00	1	0	1	0	0	4

Time Period	Eastbound			Westbound		
	Left	Through	Right	Left	Through	Right
7:00 - 7:15	0	0	16	0	0	4
7:15 - 7:30	0	0	13	0	0	13
7:30 - 7:45	0	0	11	0	0	23
7:45 - 8:00	0	0	10	0	0	21
8:00 - 8:15	0	0	16	1	0	10
8:15 - 8:30	0	0	16	0	0	19
8:30 - 8:45	0	0	29	0	0	10
8:45 - 9:00	0	0	17	0	0	9

North / South
Belle Terre Blvd

East / West
Central Ave

Peak Hour
7:15 - 8:15

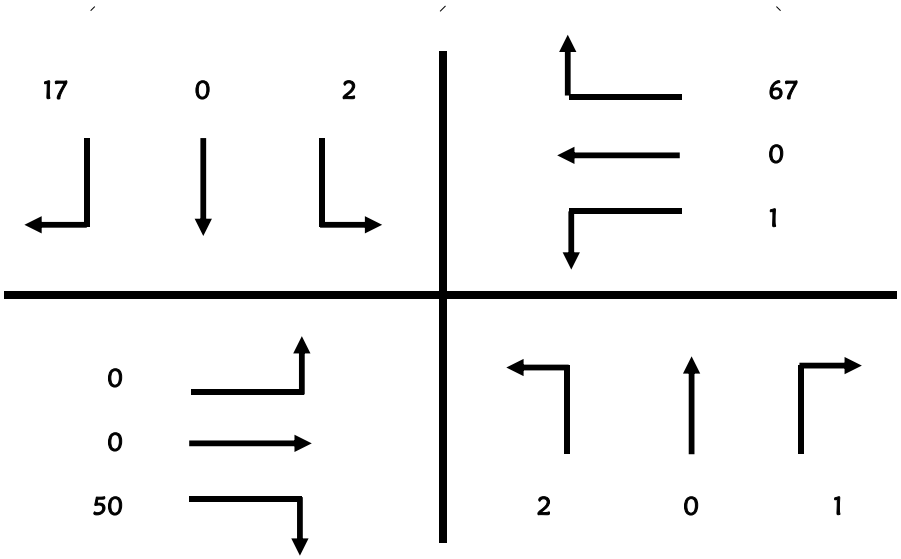

Roadway Count Summary

Vanasse Hangen Brustlin, Inc.

County	Flagler	**City**	Palm Coast
Intersection	Belle Terre Blvd		& Central Ave
Date	September 1, 2015		**All Vehicles**
Time Period	16:00 to 18:00		

VHB Project #: 62393

Time Period	Northbound Left	Northbound Through	Northbound Right	Southbound Left	Southbound Through	Southbound Right
16:00 - 16:15	34	193	2	25	133	34
16:15 - 16:30	39	205	2	40	141	28
16:30 - 16:45	32	215	3	35	154	31
16:45 - 17:00	38	222	3	35	142	35
17:00 - 17:15	33	246	2	33	160	33
17:15 - 17:30	48	216	3	47	179	44
17:30 - 17:45	44	200	0	43	163	29
17:45 - 18:00	31	217	3	38	179	35
	299	1,714	18	296	1,251	269

Time Period	Eastbound Left	Eastbound Through	Eastbound Right	Westbound Left	Westbound Through	Westbound Right
16:00 - 16:15	27	9	24	8	15	48
16:15 - 16:30	21	8	24	13	11	41
16:30 - 16:45	32	7	24	9	12	52
16:45 - 17:00	26	15	30	9	17	58
17:00 - 17:15	30	6	29	10	13	47
17:15 - 17:30	24	5	32	10	10	58
17:30 - 17:45	28	12	21	11	14	56
17:45 - 18:00	14	11	26	7	18	60
	202	73	210	77	110	420

North / South
Belle Terre Blvd

East / West
Central Ave

Peak Hour
17:00 - 18:00

Peak Hour Factor
0.95

Total Pk Hr Voume
2,578

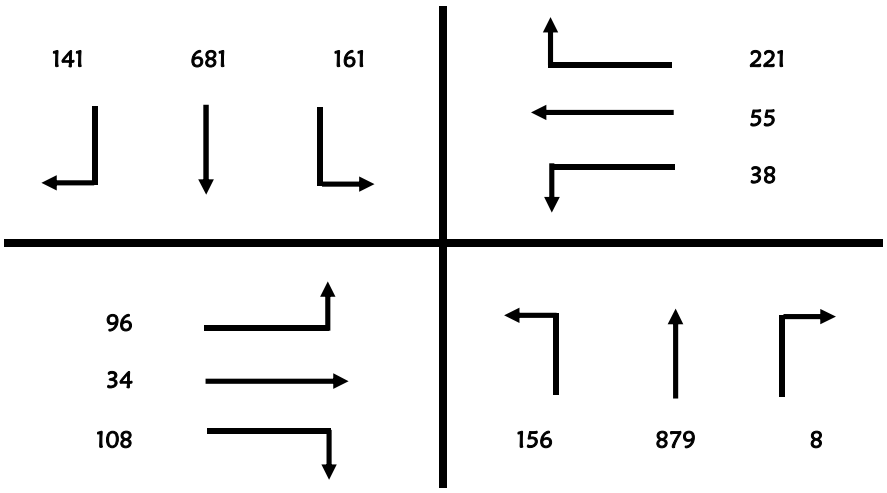

Roadway Count Summary

Vanasse Hangen Brustlin, Inc.

County	Flagler	**City**	Palm Coast
Intersection	Belle Terre Blvd	&	Central Ave
Date	September 1, 2015		
Time Period	16:00 to 18:00		**Trucks**

VHB Project #: 62393

Time Period	Northbound			Southbound		
	Left	Through	Right	Left	Through	Right
16:00 - 16:15	0	2	0	0	4	0
16:15 - 16:30	1	1	0	0	0	0
16:30 - 16:45	2	0	0	1	5	1
16:45 - 17:00	1	3	0	0	1	1
17:00 - 17:15	0	0	0	0	1	0
17:15 - 17:30	0	0	0	0	4	0
17:30 - 17:45	0	2	0	0	2	0
17:45 - 18:00	1	2	0	0	1	0

Time Period	Eastbound			Westbound		
	Left	Through	Right	Left	Through	Right
16:00 - 16:15	1	0	0	0	0	0
16:15 - 16:30	0	0	1	1	0	1
16:30 - 16:45	0	0	0	0	0	0
16:45 - 17:00	0	0	0	1	0	0
17:00 - 17:15	1	0	0	0	0	0
17:15 - 17:30	1	0	0	1	0	0
17:30 - 17:45	0	0	0	0	0	0
17:45 - 18:00	0	0	0	0	0	0

North / South
Belle Terre Blvd

East / West
Central Ave

Peak Hour
17:00 - 18:00

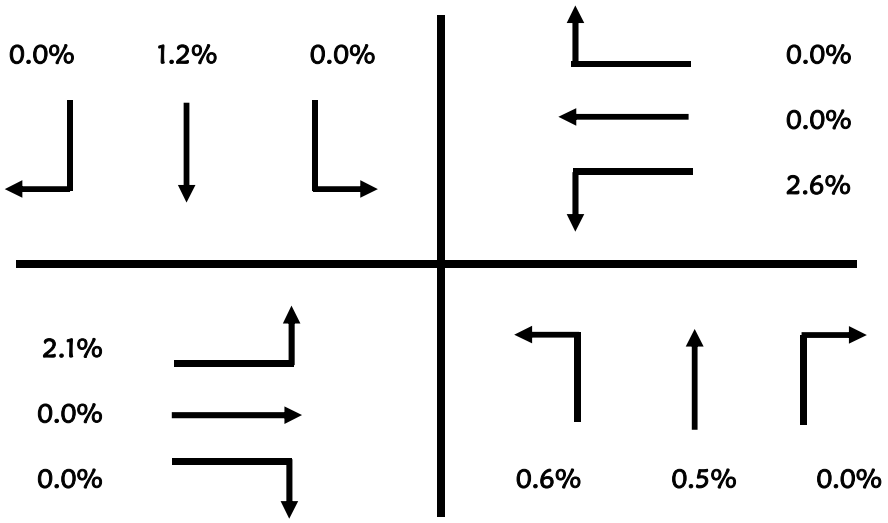

Roadway Count Summary

Vanasse Hangen Brustlin, Inc.

County	Flagler	**City**	Palm Coast
Intersection	Belle Terre Blvd	&	Central Ave
Date	September 1, 2015		
Time Period	16:00 to 18:00		**U-Turn & RTOR**

VHB Project #: 62393

Time Period	Northbound			Southbound		
	Left	Through	Right	Left	Through	Right
16:00 - 16:15	0	0	2	0	0	14
16:15 - 16:30	5	0	1	0	0	12
16:30 - 16:45	3	0	2	0	0	16
16:45 - 17:00	3	0	3	0	0	14
17:00 - 17:15	1	0	1	0	0	11
17:15 - 17:30	2	0	0	0	0	15
17:30 - 17:45	4	0	0	0	0	15
17:45 - 18:00	1	0	3	0	0	8

Time Period	Eastbound			Westbound		
	Left	Through	Right	Left	Through	Right
16:00 - 16:15	0	0	13	0	0	4
16:15 - 16:30	0	0	12	0	0	21
16:30 - 16:45	0	0	16	0	0	19
16:45 - 17:00	0	0	12	0	0	13
17:00 - 17:15	0	0	17	0	0	20
17:15 - 17:30	0	0	22	0	0	30
17:30 - 17:45	0	0	11	0	0	19
17:45 - 18:00	0	0	8	0	0	19

North / South
Belle Terre Blvd

East / West
Central Ave

Peak Hour
17:00 - 18:00

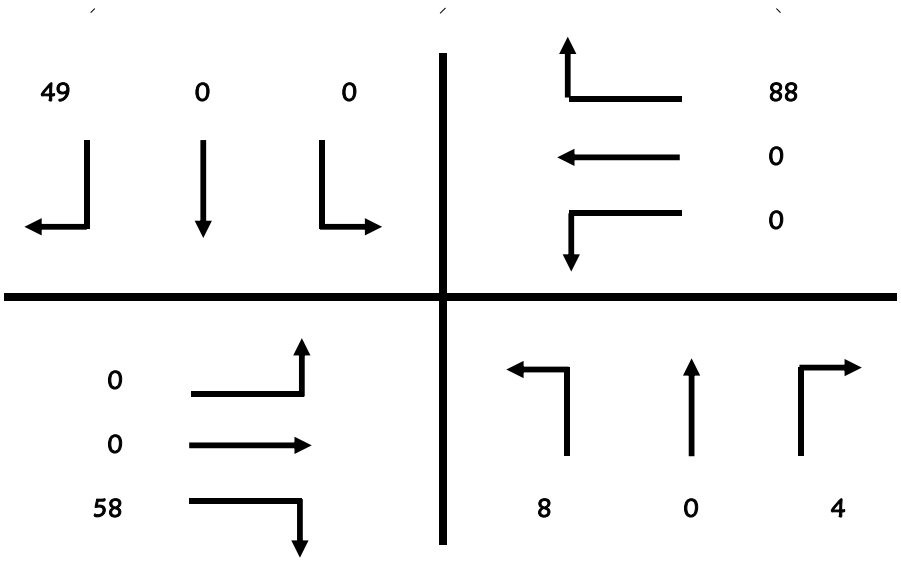

Pedestrian & Bicycle Summary

Project #: 62393
Date: 9/1/2015

NB/SB: Belle Terre Blvd
EB/WB: Central Ave

Hour

		7:00	8:00		16:00	17:00				
		1	2	3	4	5	6	7	8	
Eastbound ▶	Bike	0	1		1	1				**3**
	Ped	1	0		0	0				**1**
Westbound ◀	Bike	0	0		0	0				**0**
	Ped	0	0		0	0				**0**

	Hour	Southbound Ped	Southbound ▼ Bike	Northbound Ped	Northbound ▲ Bike
1	7:00	0	2	1	0
2	8:00	0	2	0	0
3					
4	16:00	0	0	0	0
5	17:00	1	1	0	0
6					
7					
8					
		1	**5**	**1**	**0**

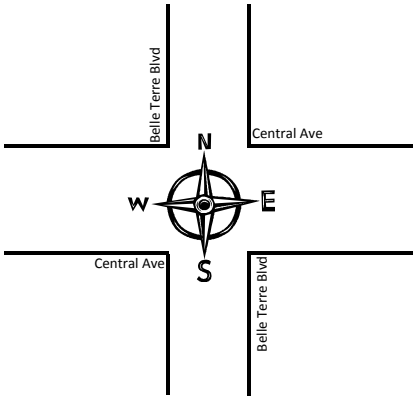

	Southbound Ped	Southbound ▼ Bike	Northbound Ped	Northbound ▲ Bike	Hour
1	0	1	1	0	7:00
2	1	3	1	0	8:00
3					
4	0	0	0	0	16:00
5	1	3	1	0	17:00
6					
7					
8					
	2	**7**	**3**	**0**	

		7:00	8:00		16:00	17:00				
		1	2	3	4	5	6	7	8	
Eastbound ▶	Bike	3	2		0	1				**6**
	Ped	0	0		0	0				**0**
Westbound ◀	Bike	0	0		0	0				**0**
	Ped	0	0		0	0				**0**

Hour

Roadway Count Summary

Vanasse Hangen Brustlin, Inc.

County	Flagler	**City**	Palm Coast
Intersection	Belle Terre Blvd	&	Royal Palms Pkwy
Date	September 1, 2015		**All Vehicles**
Time Period	7:00 to 9:00		

VHB Project #: 62393

Time Period	Northbound Left	Northbound Through	Northbound Right	Southbound Left	Southbound Through	Southbound Right
7:00 - 7:15	20	67	8	44	165	10
7:15 - 7:30	16	74	12	67	238	11
7:30 - 7:45	18	106	17	84	279	13
7:45 - 8:00	32	155	16	96	204	12
8:00 - 8:15	30	134	13	100	157	8
8:15 - 8:30	36	111	7	78	154	10
8:30 - 8:45	27	130	14	63	214	13
8:45 - 9:00	21	140	13	54	198	3
	200	917	100	586	1,609	80

Time Period	Eastbound Left	Eastbound Through	Eastbound Right	Westbound Left	Westbound Through	Westbound Right
7:00 - 7:15	7	11	22	2	11	20
7:15 - 7:30	3	15	33	9	8	19
7:30 - 7:45	2	27	40	13	17	25
7:45 - 8:00	4	27	34	11	19	22
8:00 - 8:15	4	19	20	19	26	49
8:15 - 8:30	7	17	27	17	25	50
8:30 - 8:45	3	23	17	10	20	38
8:45 - 9:00	4	18	39	7	9	24
	34	157	232	88	135	247

North / South
Belle Terre Blvd

East / West
Royal Palms Pkwy

Peak Hour
7:30 - 8:30

Peak Hour Factor
0.93

Total Pk Hr Voume
2,391

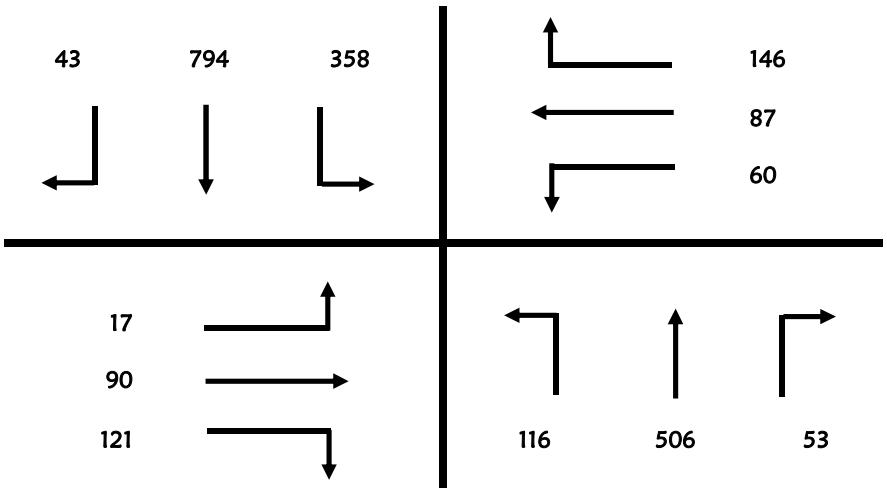

Roadway Count Summary

Vanasse Hangen Brustlin, Inc.

County	Flagler	**City**	Palm Coast
Intersection	Belle Terre Blvd	&	Royal Palms Pkwy
Date	September 1, 2015		
Time Period	7:00 to 9:00		**Trucks**

VHB Project #: 62393

Time Period	Northbound Left	Northbound Through	Northbound Right	Southbound Left	Southbound Through	Southbound Right
7:00 - 7:15	1	9	0	1	6	0
7:15 - 7:30	0	4	0	0	22	1
7:30 - 7:45	0	2	1	0	6	0
7:45 - 8:00	2	13	1	2	2	0
8:00 - 8:15	2	12	0	2	4	0
8:15 - 8:30	1	8	1	0	2	0
8:30 - 8:45	1	3	0	1	10	1
8:45 - 9:00	1	8	0	0	9	0

Time Period	Eastbound Left	Eastbound Through	Eastbound Right	Westbound Left	Westbound Through	Westbound Right
7:00 - 7:15	1	2	0	0	0	0
7:15 - 7:30	0	0	3	1	0	0
7:30 - 7:45	0	2	2	0	0	0
7:45 - 8:00	0	0	0	0	0	0
8:00 - 8:15	0	1	0	0	0	2
8:15 - 8:30	0	1	1	0	0	0
8:30 - 8:45	1	1	0	1	1	0
8:45 - 9:00	0	2	1	0	0	0

North / South
Belle Terre Blvd

East / West
Royal Palms Pkwy

Peak Hour
7:30 - 8:30

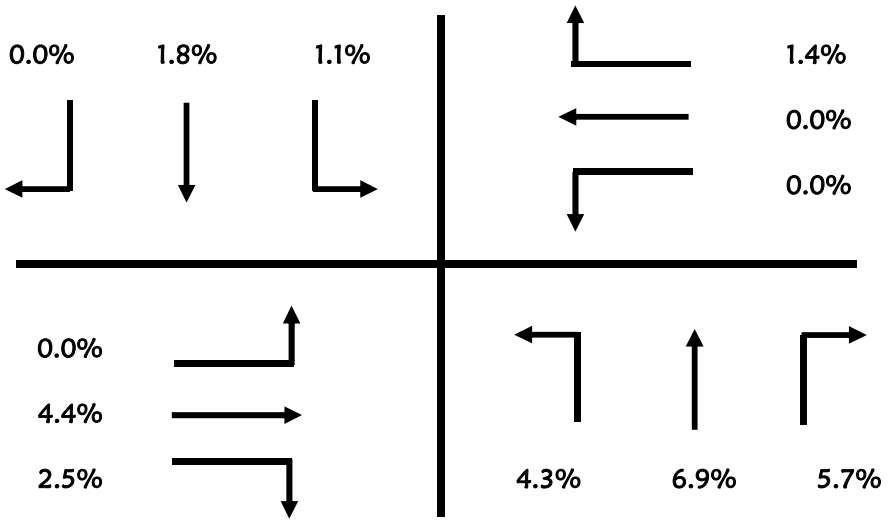

Roadway Count Summary

Vanasse Hangen Brustlin, Inc.

County	Flagler	**City**	Palm Coast
Intersection	Belle Terre Blvd	&	Royal Palms Pkwy
Date	September 1, 2015		
Time Period	7:00 to 9:00		**U-Turn & RTOR**

VHB Project #: 62393

Time Period	Northbound			Southbound		
	Left	Through	Right	Left	Through	Right
7:00 - 7:15	1	0	5	0	0	3
7:15 - 7:30	0	0	0	1	0	2
7:30 - 7:45	0	0	2	0	0	0
7:45 - 8:00	1	0	0	1	0	5
8:00 - 8:15	0	0	2	1	0	0
8:15 - 8:30	4	0	0	0	0	0
8:30 - 8:45	2	0	0	1	0	3
8:45 - 9:00	1	0	1	0	0	0

Time Period	Eastbound			Westbound		
	Left	Through	Right	Left	Through	Right
7:00 - 7:15	0	0	14	0	0	9
7:15 - 7:30	0	0	20	0	0	8
7:30 - 7:45	0	0	24	0	0	9
7:45 - 8:00	0	0	24	0	0	6
8:00 - 8:15	0	0	10	0	0	5
8:15 - 8:30	0	0	12	0	0	13
8:30 - 8:45	0	0	14	0	0	17
8:45 - 9:00	0	0	33	0	0	7

North / South
Belle Terre Blvd

East / West
Royal Palms Pkwy

Peak Hour
7:30 - 8:30

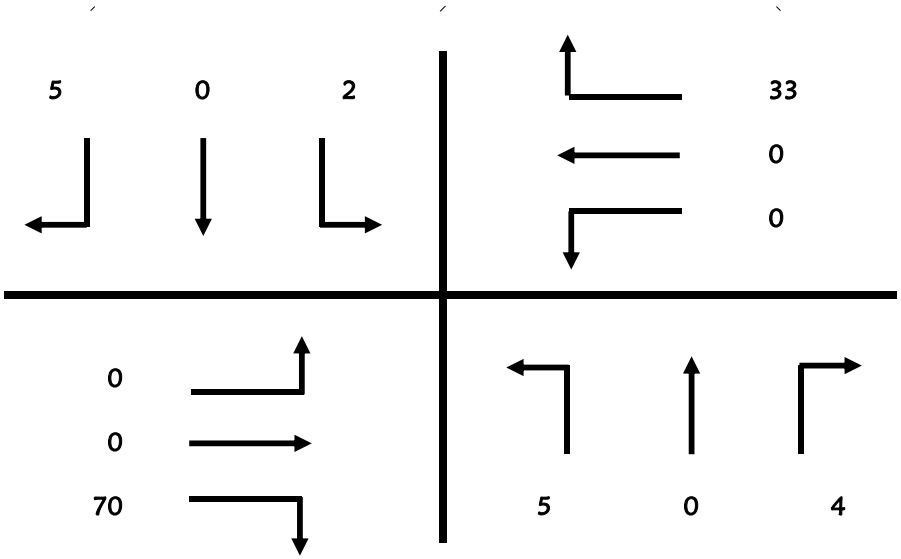

Roadway Count Summary

Vanasse Hangen Brustlin, Inc.

County	Flagler	**City**	Palm Coast
Intersection	Belle Terre Blvd	&	Royal Palms Pkwy
Date	September 1, 2015		**All Vehicles**
Time Period	16:00 to 18:00		

VHB Project #: 62393

Time Period	Northbound Left	Northbound Through	Northbound Right	Southbound Left	Southbound Through	Southbound Right
16:00 - 16:15	36	199	22	22	160	7
16:15 - 16:30	28	236	9	34	172	9
16:30 - 16:45	25	207	16	32	158	5
16:45 - 17:00	33	291	18	35	162	4
17:00 - 17:15	38	268	17	34	186	12
17:15 - 17:30	25	262	13	33	204	12
17:30 - 17:45	34	250	21	32	188	3
17:45 - 18:00	39	235	15	46	189	8
	258	1,948	131	268	1,419	60

Time Period	Eastbound Left	Eastbound Through	Eastbound Right	Westbound Left	Westbound Through	Westbound Right
16:00 - 16:15	9	14	39	3	19	76
16:15 - 16:30	6	14	29	15	15	61
16:30 - 16:45	13	14	30	16	25	56
16:45 - 17:00	11	15	32	16	24	66
17:00 - 17:15	7	28	34	15	30	86
17:15 - 17:30	13	15	31	25	26	66
17:30 - 17:45	6	22	43	13	17	71
17:45 - 18:00	13	20	35	18	29	61
	78	142	273	121	185	543

North / South
Belle Terre Blvd

East / West
Royal Palms Pkwy

Peak Hour
17:00 - 18:00

Peak Hour Factor
0.96

Total Pk Hr Voume
2,888

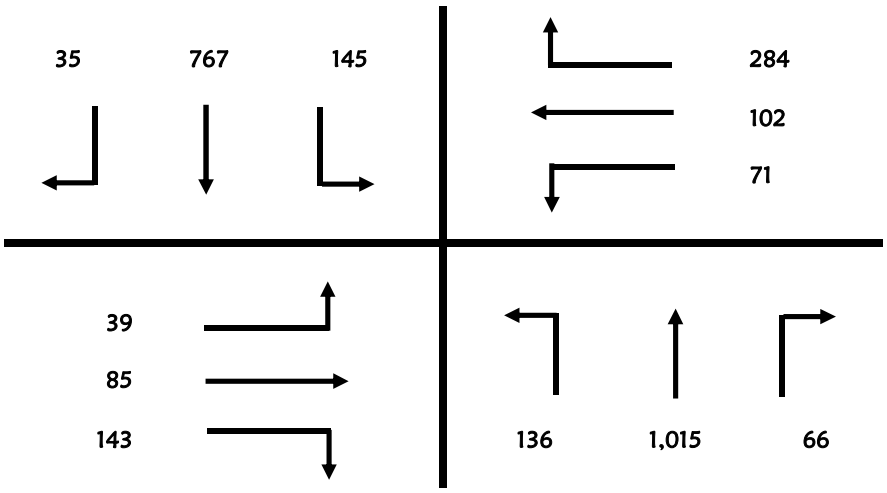

Roadway Count Summary

Vanasse Hangen Brustlin, Inc.

County	Flagler	**City**	Palm Coast
Intersection	Belle Terre Blvd	&	Royal Palms Pkwy
Date	September 1, 2015		
Time Period	16:00 to 18:00		**Trucks**

VHB Project #: 62393

Time Period	Northbound			Southbound		
	Left	Through	Right	Left	Through	Right
16:00 - 16:15	2	3	2	0	4	0
16:15 - 16:30	1	1	0	1	2	0
16:30 - 16:45	0	1	0	1	3	0
16:45 - 17:00	0	2	0	0	3	0
17:00 - 17:15	0	1	0	2	1	1
17:15 - 17:30	0	1	0	0	3	0
17:30 - 17:45	0	2	0	2	1	0
17:45 - 18:00	0	3	0	1	0	0

Time Period	Eastbound			Westbound		
	Left	Through	Right	Left	Through	Right
16:00 - 16:15	0	0	0	0	2	0
16:15 - 16:30	0	0	0	0	1	0
16:30 - 16:45	0	0	1	0	1	0
16:45 - 17:00	0	0	0	0	0	0
17:00 - 17:15	0	0	1	0	0	0
17:15 - 17:30	0	0	0	0	0	1
17:30 - 17:45	0	1	1	0	0	0
17:45 - 18:00	0	0	0	0	0	0

North / South
Belle Terre Blvd

East / West
Royal Palms Pkwy

Peak Hour
17:00 - 18:00

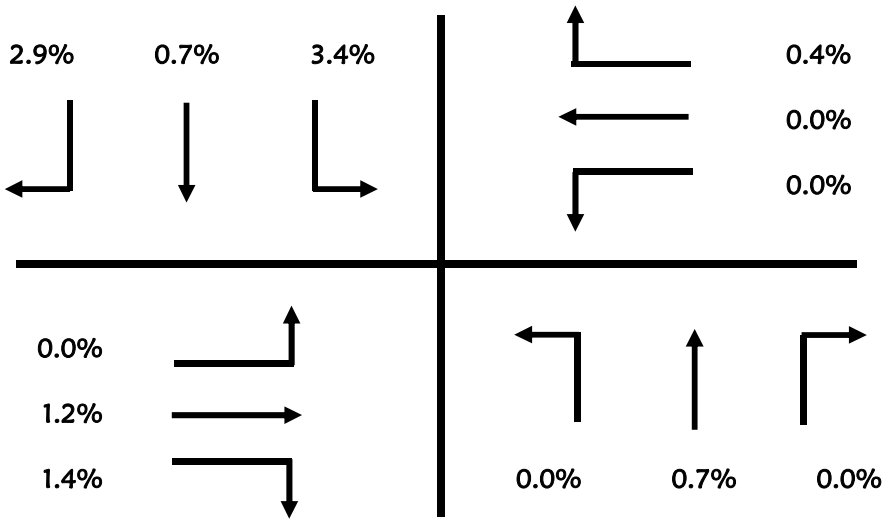

Roadway Count Summary

Vanasse Hangen Brustlin, Inc.

County	Flagler	**City**	Palm Coast
Intersection	Belle Terre Blvd	&	Royal Palms Pkwy
Date	September 1, 2015		
Time Period	16:00 to 18:00		**U-Turn & RTOR**

VHB Project #: 62393

Time Period	Northbound			Southbound		
	Left	Through	Right	Left	Through	Right
16:00 - 16:15	1	0	0	0	0	0
16:15 - 16:30	1	0	2	0	0	1
16:30 - 16:45	2	0	1	0	0	1
16:45 - 17:00	2	0	0	0	0	0
17:00 - 17:15	1	0	3	0	0	2
17:15 - 17:30	0	0	2	0	0	0
17:30 - 17:45	2	0	3	0	0	0
17:45 - 18:00	1	0	3	0	0	0

Time Period	Eastbound			Westbound		
	Left	Through	Right	Left	Through	Right
16:00 - 16:15	0	0	26	0	0	17
16:15 - 16:30	0	0	18	0	0	22
16:30 - 16:45	0	0	18	0	0	12
16:45 - 17:00	0	0	18	0	0	9
17:00 - 17:15	0	0	21	0	0	18
17:15 - 17:30	0	0	17	0	0	14
17:30 - 17:45	0	0	15	0	0	19
17:45 - 18:00	0	0	21	0	0	14

North / South
Belle Terre Blvd

East / West
Royal Palms Pkwy

Peak Hour
17:00 - 18:00

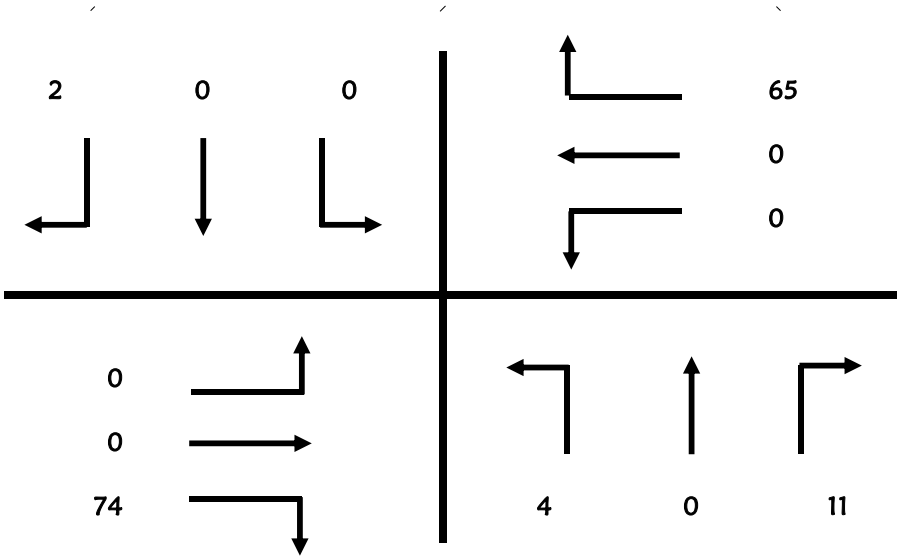

Pedestrian & Bicycle Summary

Project #: 62393 **NB/SB:** Belle Terre Blvd

Date: 9/1/2015 **EB/WB:** Royal Palms Pkwy

Hour

		7:00	8:00		16:00	17:00				
		1	2	3	4	5	6	7	8	
Eastbound ▶	Bike	0	0		0	2				**2**
	Ped	0	0		0	0				**0**
Westbound ◀	Bike	0	6		1	0				**7**
	Ped	0	2		0	1				**3**

		Southbound		**Northbound**			**Southbound**		**Northbound**		
	Hour	Ped ▼	Bike	Ped ▲	Bike		Ped ▼	Bike	Ped ▲	Bike	Hour
1	7:00	0	0	0	1	1	1	0	0	0	7:00
2	8:00	0	0	0	3	2	0	0	0	1	8:00
3						3					
4	16:00	0	0	3	1	4	0	0	0	0	16:00
5	17:00	0	0	0	2	5	0	0	0	2	17:00
6						6					
7						7					
8						8					
		0	**0**	**3**	**7**		**1**	**0**	**0**	**3**	

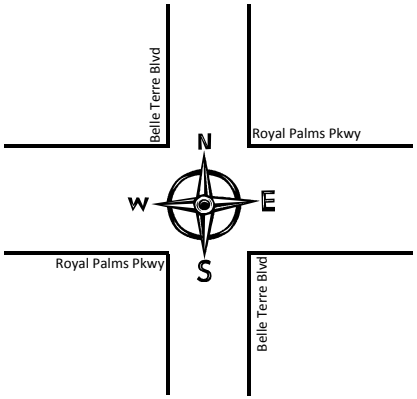

Eastbound ▶	Bike	1	0		1	1				**3**
	Ped	1	0		0	0				**1**
Westbound ◀	Bike	5	1		1	0				**7**
	Ped	1	2		0	0				**3**

7:00 8:00 16:00 17:00

1 2 3 4 5 6 7 8

Hour

Roadway Count Summary

Vanasse Hangen Brustlin, Inc.

County	Flagler	**City**	Palm Coast
Intersection	Belle Terre Blvd	&	Point Pleasant Dr
Date	September 1, 2015		**All Vehicles**
Time Period	7:00 to 9:00		

VHB Project #: 62393

Time Period	Northbound Left	Northbound Through	Northbound Right	Southbound Left	Southbound Through	Southbound Right
7:00 - 7:15	0	97	2	0	224	0
7:15 - 7:30	0	87	4	7	320	0
7:30 - 7:45	0	130	7	5	350	0
7:45 - 8:00	0	174	6	4	296	0
8:00 - 8:15	0	188	3	4	259	0
8:15 - 8:30	0	187	3	2	243	0
8:30 - 8:45	0	154	4	2	277	0
8:45 - 9:00	0	150	8	7	248	0
	0	1,167	37	31	2,217	0

Time Period	Eastbound Left	Eastbound Through	Eastbound Right	Westbound Left	Westbound Through	Westbound Right
7:00 - 7:15	0	0	0	11	0	5
7:15 - 7:30	0	0	0	12	0	5
7:30 - 7:45	0	0	0	18	0	11
7:45 - 8:00	0	0	0	13	0	9
8:00 - 8:15	0	0	0	6	0	6
8:15 - 8:30	0	0	0	12	0	18
8:30 - 8:45	0	0	0	13	0	9
8:45 - 9:00	0	0	0	4	0	9
	0	0	0	89	0	72

North / South
Belle Terre Blvd

East / West
Point Pleasant Dr

Peak Hour
7:30 - 8:30

Peak Hour Factor
0.94

Total Pk Hr Voume
1,954

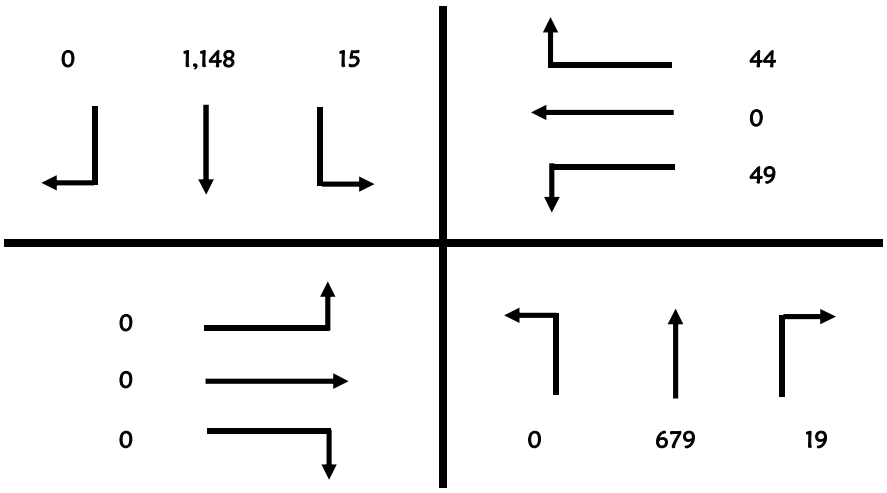

Roadway Count Summary

Vanasse Hangen Brustlin, Inc.

County	Flagler	**City**	Palm Coast
Intersection	Belle Terre Blvd	&	Point Pleasant Dr
Date	September 1, 2015		
Time Period	7:00 to 9:00		**Trucks**

VHB Project #: 62393

Time Period	Northbound Left	Northbound Through	Northbound Right	Southbound Left	Southbound Through	Southbound Right
7:00 - 7:15	0	11	0	0	8	0
7:15 - 7:30	0	2	1	0	23	0
7:30 - 7:45	0	2	0	0	3	0
7:45 - 8:00	0	10	2	0	5	0
8:00 - 8:15	0	14	0	0	4	0
8:15 - 8:30	0	10	0	1	6	0
8:30 - 8:45	0	3	0	0	10	0
8:45 - 9:00	0	6	0	0	7	0

Time Period	Eastbound Left	Eastbound Through	Eastbound Right	Westbound Left	Westbound Through	Westbound Right
7:00 - 7:15	0	0	0	0	0	0
7:15 - 7:30	0	0	0	1	0	0
7:30 - 7:45	0	0	0	0	0	1
7:45 - 8:00	0	0	0	0	0	1
8:00 - 8:15	0	0	0	0	0	0
8:15 - 8:30	0	0	0	0	0	1
8:30 - 8:45	0	0	0	1	0	0
8:45 - 9:00	0	0	0	0	0	1

North / South
Belle Terre Blvd

East / West
Point Pleasant Dr

Peak Hour
7:30 - 8:30

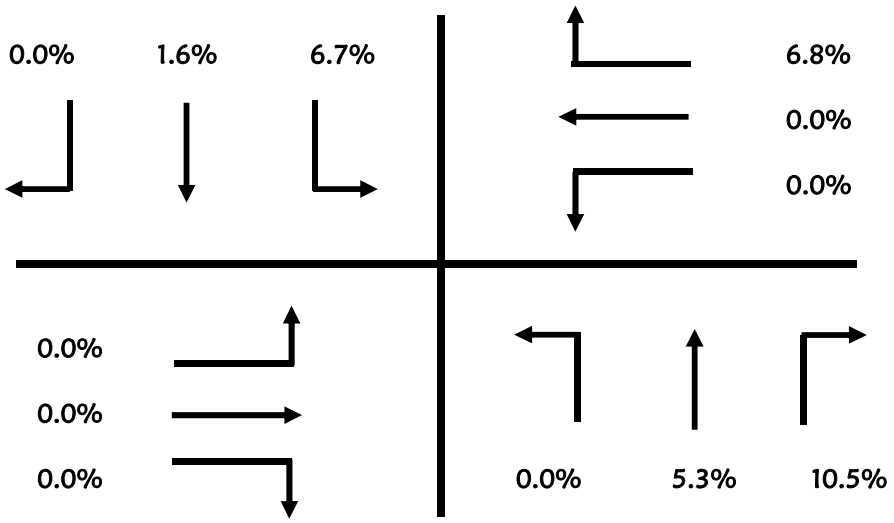

Roadway Count Summary

Vanasse Hangen Brustlin, Inc.

County	Flagler	**City**	Palm Coast
Intersection	Belle Terre Blvd	&	Point Pleasant Dr
Date	September 1, 2015		
Time Period	7:00 to 9:00		**U-Turn & RTOR**

VHB Project #: 62393

Time Period	Northbound Left	Northbound Through	Northbound Right	Southbound Left	Southbound Through	Southbound Right
7:00 - 7:15	0	0	0	0	0	0
7:15 - 7:30	0	0	0	0	0	0
7:30 - 7:45	0	0	0	0	0	0
7:45 - 8:00	0	0	0	0	0	0
8:00 - 8:15	0	0	0	1	0	0
8:15 - 8:30	0	0	0	0	0	0
8:30 - 8:45	0	0	0	0	0	0
8:45 - 9:00	0	0	0	1	0	0

Time Period	Eastbound Left	Eastbound Through	Eastbound Right	Westbound Left	Westbound Through	Westbound Right
7:00 - 7:15	0	0	0	0	0	0
7:15 - 7:30	0	0	0	0	0	0
7:30 - 7:45	0	0	0	0	0	0
7:45 - 8:00	0	0	0	0	0	0
8:00 - 8:15	0	0	0	0	0	0
8:15 - 8:30	0	0	0	0	0	0
8:30 - 8:45	0	0	0	0	0	0
8:45 - 9:00	0	0	0	0	0	0

North / South
Belle Terre Blvd

East / West
Point Pleasant Dr

Peak Hour
7:30 - 8:30

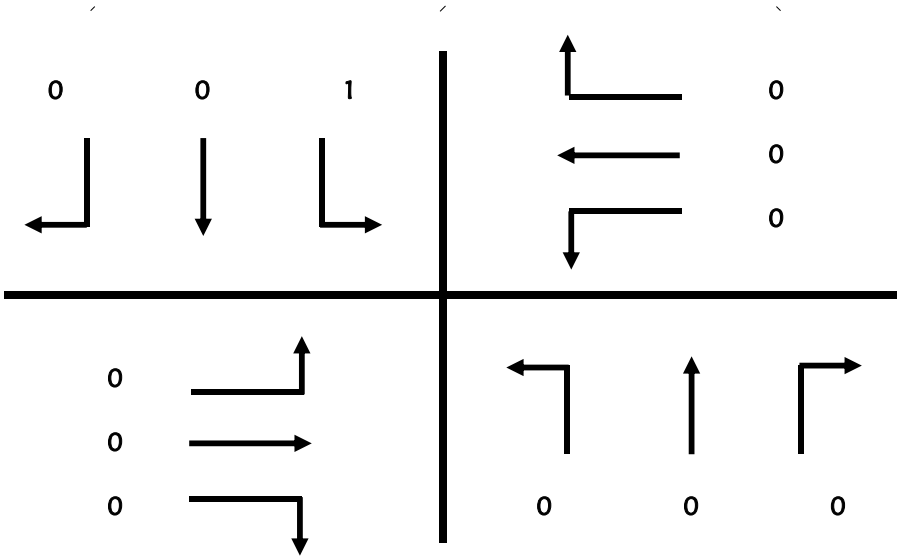

Roadway Count Summary

Vanasse Hangen Brustlin, Inc.

County	Flagler	**City**	Palm Coast
Intersection	Belle Terre Blvd	&	Point Pleasant Dr
Date	September 1, 2015		**All Vehicles**
Time Period	16:00 to 18:00		

VHB Project #: 62393

Time Period	Northbound Left	Northbound Through	Northbound Right	Southbound Left	Southbound Through	Southbound Right
16:00 - 16:15	0	259	16	11	187	0
16:15 - 16:30	0	310	14	4	201	0
16:30 - 16:45	0	292	5	5	207	0
16:45 - 17:00	0	336	19	7	210	0
17:00 - 17:15	0	335	13	15	203	0
17:15 - 17:30	0	305	14	6	236	0
17:30 - 17:45	0	329	8	7	215	0
17:45 - 18:00	0	305	16	6	246	0
	0	2,471	105	61	1,705	0

Time Period	Eastbound Left	Eastbound Through	Eastbound Right	Westbound Left	Westbound Through	Westbound Right
16:00 - 16:15	0	0	0	5	0	5
16:15 - 16:30	0	0	0	9	0	7
16:30 - 16:45	0	0	0	6	0	7
16:45 - 17:00	0	0	0	6	0	8
17:00 - 17:15	0	0	0	8	0	8
17:15 - 17:30	0	0	0	8	0	8
17:30 - 17:45	0	0	0	8	0	6
17:45 - 18:00	0	0	0	13	0	4
	0	0	0	63	0	53

North / South
Belle Terre Blvd

East / West
Point Pleasant Dr

Peak Hour
17:00 - 18:00

Peak Hour Factor
0.98

Total Pk Hr Voume
2,322

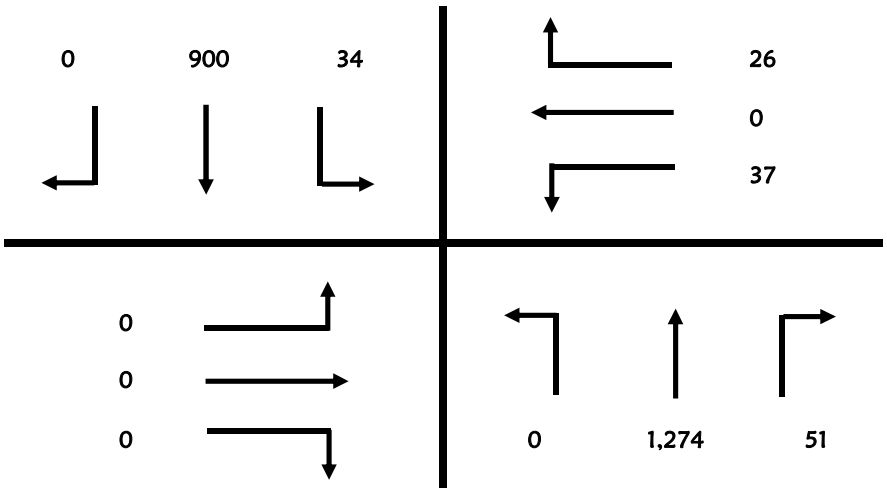

Roadway Count Summary

Vanasse Hangen Brustlin, Inc.

County	Flagler	**City**	Palm Coast
Intersection	Belle Terre Blvd	&	Point Pleasant Dr
Date	September 1, 2015		
Time Period	16:00 to 18:00		**Trucks**

VHB Project #: 62393

Time Period	Northbound			Southbound		
	Left	Through	Right	Left	Through	Right
16:00 - 16:15	0	1	0	0	4	0
16:15 - 16:30	0	1	0	0	2	0
16:30 - 16:45	0	0	0	0	6	0
16:45 - 17:00	0	1	0	0	3	0
17:00 - 17:15	0	1	0	0	4	0
17:15 - 17:30	0	1	0	0	4	0
17:30 - 17:45	0	2	0	0	4	0
17:45 - 18:00	0	3	0	1	0	0

Time Period	Eastbound			Westbound		
	Left	Through	Right	Left	Through	Right
16:00 - 16:15	0	0	0	0	0	0
16:15 - 16:30	0	0	0	0	0	0
16:30 - 16:45	0	0	0	0	0	0
16:45 - 17:00	0	0	0	0	0	0
17:00 - 17:15	0	0	0	0	0	0
17:15 - 17:30	0	0	0	0	0	0
17:30 - 17:45	0	0	0	0	0	0
17:45 - 18:00	0	0	0	0	0	0

North / South
Belle Terre Blvd

East / West
Point Pleasant Dr

Peak Hour
17:00 - 18:00

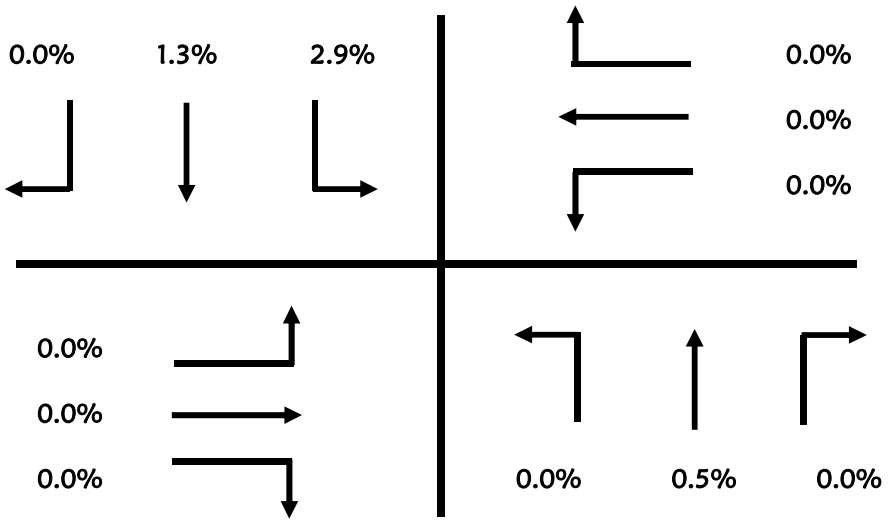

Roadway Count Summary

Vanasse Hangen Brustlin, Inc.

County	Flagler	**City**	Palm Coast
Intersection	Belle Terre Blvd	&	Point Pleasant Dr
Date	September 1, 2015		
Time Period	16:00 to 18:00		**U-Turn & RTOR**

VHB Project #: 62393

Time Period	Northbound			Southbound		
	Left	Through	Right	Left	Through	Right
16:00 - 16:15	0	0	0	0	0	0
16:15 - 16:30	0	0	0	0	0	0
16:30 - 16:45	0	0	0	1	0	0
16:45 - 17:00	0	0	0	0	0	0
17:00 - 17:15	0	0	0	0	0	0
17:15 - 17:30	0	0	0	0	0	0
17:30 - 17:45	0	0	0	0	0	0
17:45 - 18:00	0	0	0	1	0	0

Time Period	Eastbound			Westbound		
	Left	Through	Right	Left	Through	Right
16:00 - 16:15	0	0	0	0	0	0
16:15 - 16:30	0	0	0	0	0	0
16:30 - 16:45	0	0	0	0	0	0
16:45 - 17:00	0	0	0	0	0	0
17:00 - 17:15	0	0	0	0	0	0
17:15 - 17:30	0	0	0	0	0	0
17:30 - 17:45	0	0	0	0	0	0
17:45 - 18:00	0	0	0	0	0	0

North / South
Belle Terre Blvd

East / West
Point Pleasant Dr

Peak Hour
17:00 - 18:00

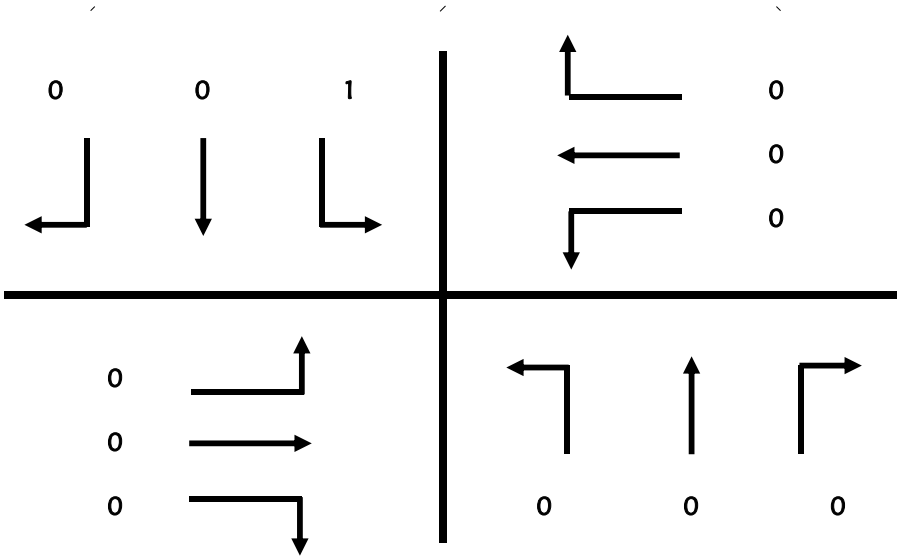

Pedestrian & Bicycle Summary

Project #: 62393 **NB/SB:** Belle Terre Blvd

Date: 9/1/2015 **EB/WB:** Point Pleasant Dr

Hour

		7:00	8:00		16:00	17:00				
		1	2	3	4	5	6	7	8	
Eastbound ▶	Bike	0	0		0	0				0
	Ped	0	0		0	0				0
Westbound ◀	Bike	0	4		0	3				7
	Ped	0	2		0	0				2

Hour	Southbound Ped ▼	Southbound Bike ▼	Northbound Ped ▲	Northbound Bike ▲
1 7:00	0	0	0	0
2 8:00	0	0	0	0
3				
4 16:00	0	0	0	0
5 17:00	0	0	0	0
6				
7				
8				
	0	0	0	0

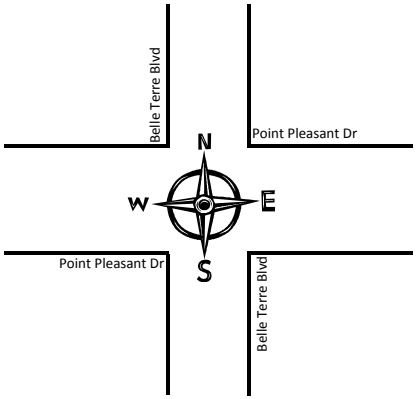

Southbound Ped ▼	Southbound Bike ▼	Northbound Ped ▲	Northbound Bike ▲	Hour
0	0	0	0	1 7:00
0	0	0	0	2 8:00
				3
0	0	0	0	4 16:00
0	0	0	0	5 17:00
				6
				7
				8
0	0	0	0	

		7:00	8:00		16:00	17:00				
		1	2	3	4	5	6	7	8	
Eastbound ▶	Bike	0	0		0	0				0
	Ped	0	0		0	0				0
Westbound ◀	Bike	5	1		0	2				8
	Ped	0	3		0	0				3

Hour

Roadway Count Summary

Vanasse Hangen Brustlin, Inc.

County	Flagler	**City**	Palm Coast
Intersection	Belle Terre Blvd	&	Rymfire Dr
Date	September 1, 2015		**All Vehicles**
Time Period	7:00 to 9:00		

VHB Project #: 62393

Time Period	Northbound Left	Northbound Through	Northbound Right	Southbound Left	Southbound Through	Southbound Right
7:00 - 7:15	18	89	0	0	159	6
7:15 - 7:30	16	76	0	0	214	19
7:30 - 7:45	30	95	0	0	241	11
7:45 - 8:00	26	159	0	0	217	10
8:00 - 8:15	37	158	0	0	193	13
8:15 - 8:30	31	155	0	0	173	18
8:30 - 8:45	38	134	0	0	201	22
8:45 - 9:00	24	146	0	0	174	18
	220	1,012	0	0	1,572	117

Time Period	Eastbound Left	Eastbound Through	Eastbound Right	Westbound Left	Westbound Through	Westbound Right
7:00 - 7:15	23	0	67	0	0	0
7:15 - 7:30	19	0	105	0	0	0
7:30 - 7:45	24	0	114	0	0	0
7:45 - 8:00	41	0	95	0	0	0
8:00 - 8:15	23	0	74	0	0	0
8:15 - 8:30	32	0	66	0	0	0
8:30 - 8:45	36	0	85	0	0	0
8:45 - 9:00	40	0	83	0	0	0
	238	0	689	0	0	0

North / South
Belle Terre Blvd

East / West
Rymfire Dr

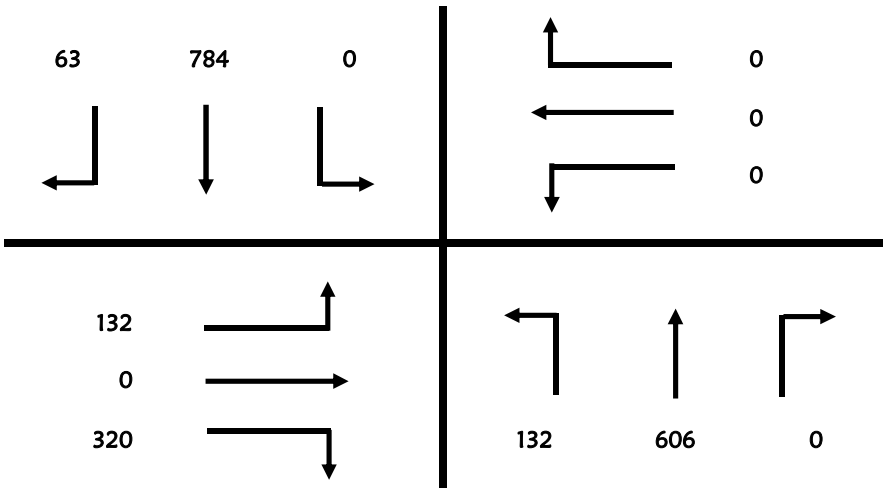

Peak Hour
7:45 - 8:45

Peak Hour Factor
0.93

Total Pk Hr Voume
2,037

Roadway Count Summary

Vanasse Hangen Brustlin, Inc.

County	Flagler	**City**	Palm Coast
Intersection	Belle Terre Blvd	&	Rymfire Dr
Date	September 1, 2015		
Time Period	7:00 to 9:00		**Trucks**

VHB Project #: 62393

Time Period	Northbound			Southbound		
	Left	Through	Right	Left	Through	Right
7:00 - 7:15	3	9	0	0	8	0
7:15 - 7:30	1	1	0	0	16	2
7:30 - 7:45	2	0	0	0	3	0
7:45 - 8:00	2	9	0	0	4	0
8:00 - 8:15	2	12	0	0	3	1
8:15 - 8:30	4	5	0	0	4	2
8:30 - 8:45	2	4	0	0	8	0
8:45 - 9:00	0	8	0	0	7	0

Time Period	Eastbound			Westbound		
	Left	Through	Right	Left	Through	Right
7:00 - 7:15	1	0	0	0	0	0
7:15 - 7:30	0	0	6	0	0	0
7:30 - 7:45	1	0	1	0	0	0
7:45 - 8:00	1	0	1	0	0	0
8:00 - 8:15	2	0	1	0	0	0
8:15 - 8:30	3	0	0	0	0	0
8:30 - 8:45	0	0	2	0	0	0
8:45 - 9:00	0	0	0	0	0	0

North / South
Belle Terre Blvd

East / West
Rymfire Dr

Peak Hour
7:45 - 8:45

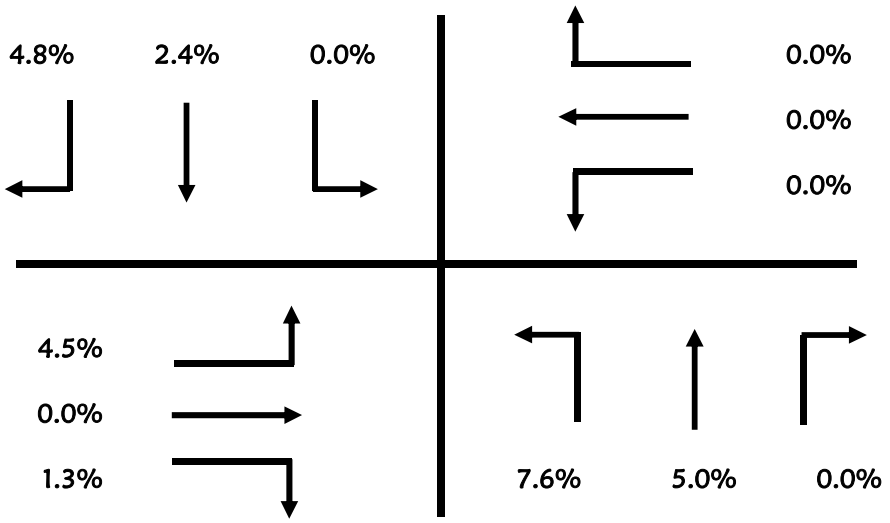

Roadway Count Summary

Vanasse Hangen Brustlin, Inc.

County	Flagler	**City**	Palm Coast
Intersection	Belle Terre Blvd	&	Rymfire Dr
Date	September 1, 2015		
Time Period	7:00 to 9:00		**U-Turn & RTOR**

VHB Project #: 62393

Time Period	Northbound			Southbound		
	Left	Through	Right	Left	Through	Right
7:00 - 7:15	0	0	0	0	0	1
7:15 - 7:30	0	0	0	0	0	6
7:30 - 7:45	0	0	0	0	0	5
7:45 - 8:00	0	0	0	0	0	1
8:00 - 8:15	0	0	0	0	0	3
8:15 - 8:30	0	0	0	0	0	4
8:30 - 8:45	1	0	0	0	0	0
8:45 - 9:00	0	0	0	0	0	6

Time Period	Eastbound			Westbound		
	Left	Through	Right	Left	Through	Right
7:00 - 7:15	0	0	13	0	0	0
7:15 - 7:30	0	0	24	0	0	0
7:30 - 7:45	0	0	20	0	0	0
7:45 - 8:00	0	0	15	0	0	0
8:00 - 8:15	0	0	30	0	0	0
8:15 - 8:30	0	0	36	0	0	0
8:30 - 8:45	0	0	31	0	0	0
8:45 - 9:00	0	0	27	0	0	0

North / South
Belle Terre Blvd

East / West
Rymfire Dr

Peak Hour
7:45 - 8:45

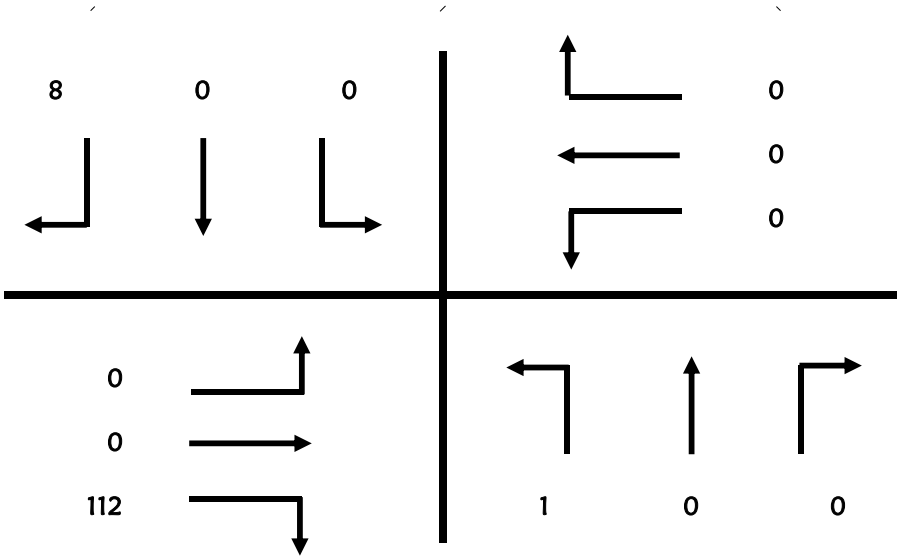

Roadway Count Summary

Vanasse Hangen Brustlin, Inc.

County	Flagler	**City**	Palm Coast
Intersection	Belle Terre Blvd	&	Rymfire Dr
Date	September 1, 2015		**All Vehicles**
Time Period	16:00 to 18:00		

VHB Project #: 62393

Time Period	Northbound Left	Northbound Through	Northbound Right	Southbound Left	Southbound Through	Southbound Right
16:00 - 16:15	73	201	0	0	171	38
16:15 - 16:30	78	216	0	0	165	35
16:30 - 16:45	69	211	0	0	152	33
16:45 - 17:00	90	265	0	0	169	32
17:00 - 17:15	94	250	0	0	172	34
17:15 - 17:30	92	246	0	0	206	37
17:30 - 17:45	75	251	0	0	179	32
17:45 - 18:00	80	228	0	0	182	51
	651	1,868	0	0	1,396	292

Time Period	Eastbound Left	Eastbound Through	Eastbound Right	Westbound Left	Westbound Through	Westbound Right
16:00 - 16:15	20	0	36	0	0	0
16:15 - 16:30	16	0	36	0	0	0
16:30 - 16:45	45	0	51	0	0	0
16:45 - 17:00	31	0	47	0	0	0
17:00 - 17:15	33	0	49	0	0	0
17:15 - 17:30	28	0	40	0	0	0
17:30 - 17:45	34	0	50	0	0	0
17:45 - 18:00	33	0	72	0	0	0
	240	0	381	0	0	0

North / South
Belle Terre Blvd

East / West
Rymfire Dr

Peak Hour
17:00 - 18:00

Peak Hour Factor
0.98

Total Pk Hr Voume
2,548

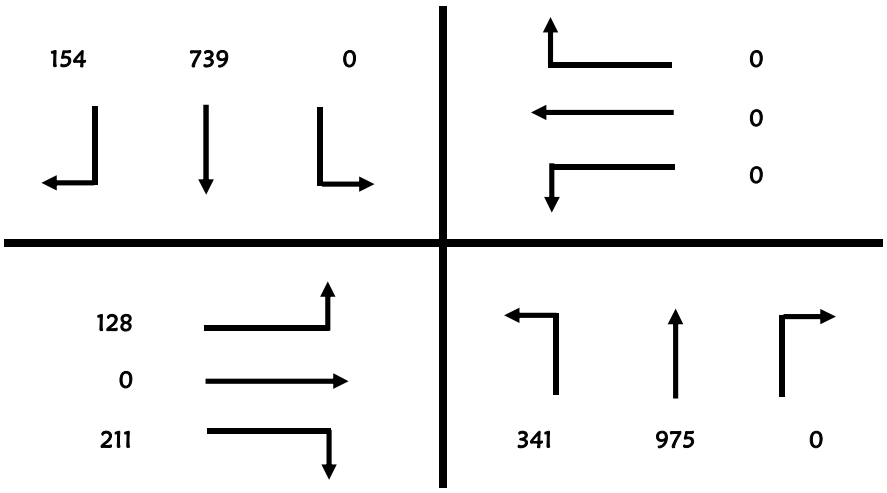

Roadway Count Summary

Vanasse Hangen Brustlin, Inc.

County	Flagler	**City**	Palm Coast
Intersection	Belle Terre Blvd	&	Rymfire Dr
Date	September 1, 2015		
Time Period	16:00 to 18:00		**Trucks**

VHB Project #: 62393

Time Period	Northbound			Southbound		
	Left	Through	Right	Left	Through	Right
16:00 - 16:15	0	3	0	0	4	0
16:15 - 16:30	0	1	0	0	2	0
16:30 - 16:45	0	0	0	0	6	0
16:45 - 17:00	1	1	0	0	2	1
17:00 - 17:15	0	1	0	0	1	0
17:15 - 17:30	0	2	0	0	3	0
17:30 - 17:45	1	0	0	0	2	0
17:45 - 18:00	1	3	0	0	3	1

Time Period	Eastbound			Westbound		
	Left	Through	Right	Left	Through	Right
16:00 - 16:15	0	0	0	0	0	0
16:15 - 16:30	0	0	0	0	0	0
16:30 - 16:45	0	0	0	0	0	0
16:45 - 17:00	0	0	1	0	0	0
17:00 - 17:15	0	0	2	0	0	0
17:15 - 17:30	0	0	0	0	0	0
17:30 - 17:45	0	0	0	0	0	0
17:45 - 18:00	0	0	0	0	0	0

North / South
Belle Terre Blvd

East / West
Rymfire Dr

Peak Hour
17:00 - 18:00

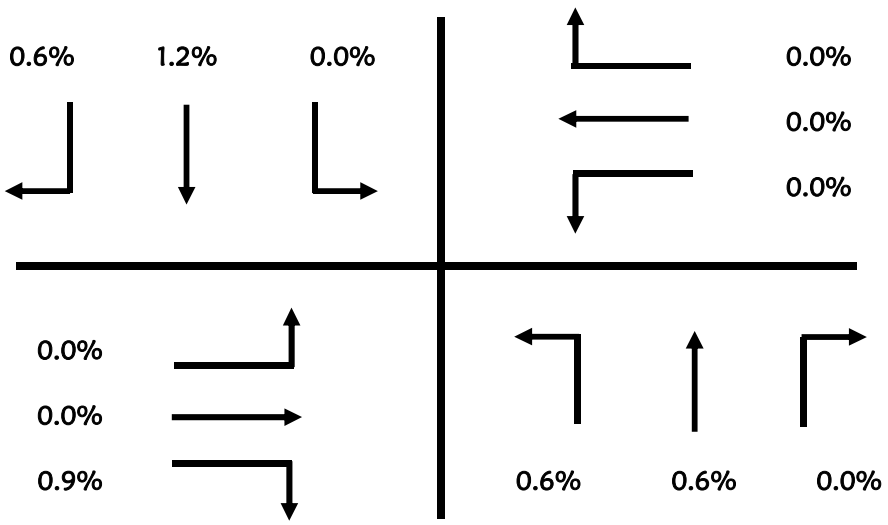

Roadway Count Summary

Vanasse Hangen Brustlin, Inc.

County	Flagler	**City**	Palm Coast
Intersection	Belle Terre Blvd	&	Rymfire Dr
Date	September 1, 2015		
Time Period	16:00 to 18:00		**U-Turn & RTOR**

VHB Project #: 62393

Time Period	Northbound Left	Northbound Through	Northbound Right	Southbound Left	Southbound Through	Southbound Right
16:00 - 16:15	0	0	0	0	0	5
16:15 - 16:30	1	0	0	0	0	6
16:30 - 16:45	0	0	0	0	0	15
16:45 - 17:00	1	0	0	0	0	6
17:00 - 17:15	0	0	0	0	0	11
17:15 - 17:30	0	0	0	0	0	9
17:30 - 17:45	0	0	0	0	0	6
17:45 - 18:00	0	0	0	0	0	7

Time Period	Eastbound Left	Eastbound Through	Eastbound Right	Westbound Left	Westbound Through	Westbound Right
16:00 - 16:15	0	0	25	0	0	0
16:15 - 16:30	0	0	23	0	0	0
16:30 - 16:45	0	0	37	0	0	0
16:45 - 17:00	0	0	25	0	0	0
17:00 - 17:15	0	0	13	0	0	0
17:15 - 17:30	0	0	7	0	0	0
17:30 - 17:45	0	0	20	0	0	0
17:45 - 18:00	0	0	13	0	0	0

North / South
Belle Terre Blvd

East / West
Rymfire Dr

Peak Hour
17:00 - 18:00

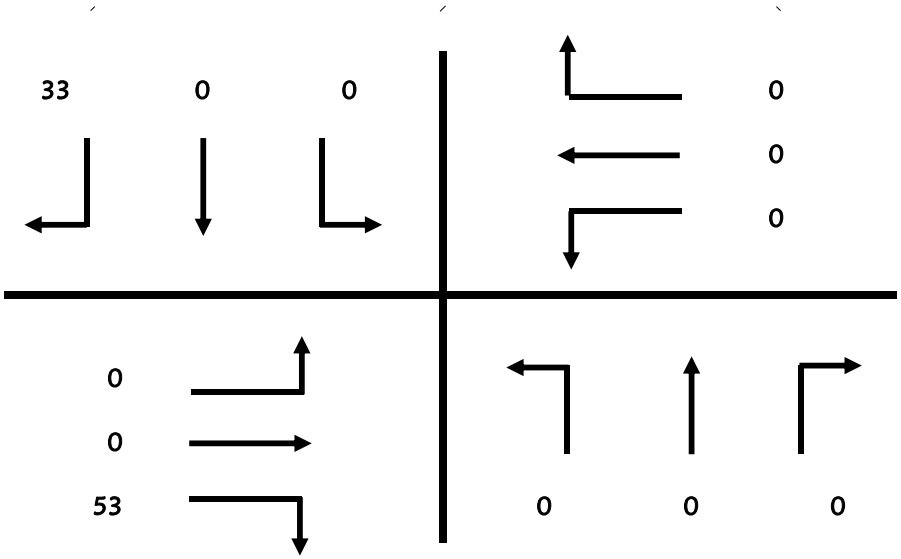

Pedestrian & Bicycle Summary

Project #: 62393 **NB/SB:** Belle Terre Blvd

Date: 9/1/2015 **EB/WB:** Rymfire Dr

Hour

		7:00	8:00		16:00	17:00				
		1	2	3	4	5	6	7	8	
Eastbound ▶	Bike	1	1		2	1				5
	Ped	0	0		0	0				0
Westbound ◀	Bike	0	0		0	0				0
	Ped	0	0		0	0				0

Hour	Southbound Ped ▼	Southbound Bike ▼	Northbound Ped ▲	Northbound Bike ▲
1 7:00	0	0	0	0
2 8:00	0	0	1	0
3				
4 16:00	0	0	0	0
5 17:00	0	0	0	0
6				
7				
8				
	0	0	1	0

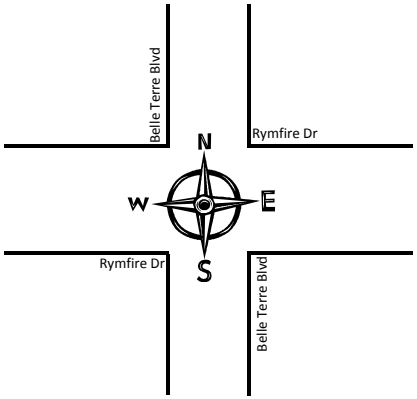

Hour	Southbound Ped ▼	Southbound Bike ▼	Northbound Ped ▲	Northbound Bike ▲	Hour
1	0	0	0	0	1 7:00
2	0	0	0	0	2 8:00
3					3
4	0	0	0	0	4 16:00
5	0	0	0	0	5 17:00
6					6
7					7
8					8
	0	0	0	0	

		7:00	8:00		16:00	17:00				
		1	2	3	4	5	6	7	8	
Eastbound ▶	Bike	4	0		0	0				4
	Ped	0	0		0	0				0
Westbound ◀	Bike	0	0		0	0				0
	Ped	0	0		0	0				0

Hour

Roadway Count Summary

Vanasse Hangen Brustlin, Inc.

County	Flagler	**City**	Palm Coast
Intersection	Belle Terre Blvd	&	Ponce DeLeon Dr
Date	September 1, 2015		**All Vehicles**
Time Period	7:00 to 9:00		

VHB Project #: 62393

Time Period	Northbound Left	Northbound Through	Northbound Right	Southbound Left	Southbound Through	Southbound Right
7:00 - 7:15	0	110	1	6	156	0
7:15 - 7:30	0	95	2	14	242	0
7:30 - 7:45	0	118	2	8	240	0
7:45 - 8:00	0	200	6	8	219	0
8:00 - 8:15	0	171	3	9	197	0
8:15 - 8:30	0	185	2	8	191	0
8:30 - 8:45	0	168	3	9	205	0
8:45 - 9:00	0	177	7	11	189	0
	0	1,224	26	73	1,639	0

Time Period	Eastbound Left	Eastbound Through	Eastbound Right	Westbound Left	Westbound Through	Westbound Right
7:00 - 7:15	0	0	0	7	0	11
7:15 - 7:30	0	0	0	6	0	10
7:30 - 7:45	0	0	0	7	0	22
7:45 - 8:00	0	0	0	3	0	20
8:00 - 8:15	0	0	0	9	0	24
8:15 - 8:30	0	0	0	12	0	21
8:30 - 8:45	0	0	0	11	0	22
8:45 - 9:00	0	0	0	4	0	16
	0	0	0	59	0	146

North / South
Belle Terre Blvd

East / West
Ponce DeLeon Dr

Peak Hour
7:45 - 8:45

Peak Hour Factor
0.94

Total Pk Hr Voume
1,706

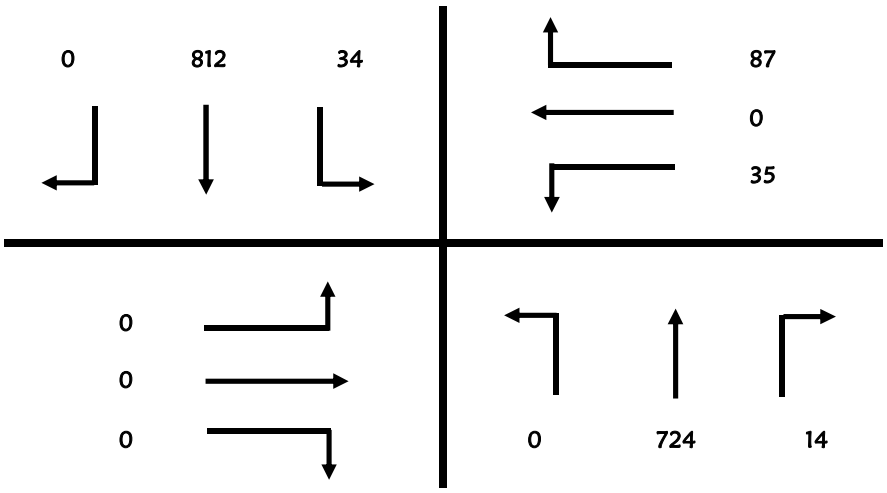

Roadway Count Summary

Vanasse Hangen Brustlin, Inc.

County	Flagler	**City**	Palm Coast
Intersection	Belle Terre Blvd	&	Ponce DeLeon Dr
Date	September 1, 2015		
Time Period	7:00 to 9:00		**Trucks**

VHB Project #: 62393

Time Period	Northbound			Southbound		
	Left	Through	Right	Left	Through	Right
7:00 - 7:15	0	10	0	0	8	0
7:15 - 7:30	0	2	0	1	19	0
7:30 - 7:45	0	1	0	0	2	0
7:45 - 8:00	0	10	1	0	4	0
8:00 - 8:15	0	11	2	0	2	0
8:15 - 8:30	0	6	1	0	9	0
8:30 - 8:45	0	4	0	0	8	0
8:45 - 9:00	0	9	0	0	6	0

Time Period	Eastbound			Westbound		
	Left	Through	Right	Left	Through	Right
7:00 - 7:15	0	0	0	0	0	1
7:15 - 7:30	0	0	0	0	0	0
7:30 - 7:45	0	0	0	0	0	0
7:45 - 8:00	0	0	0	0	0	1
8:00 - 8:15	0	0	0	1	0	1
8:15 - 8:30	0	0	0	0	0	1
8:30 - 8:45	0	0	0	0	0	0
8:45 - 9:00	0	0	0	0	0	0

North / South
Belle Terre Blvd

East / West
Ponce DeLeon Dr

Peak Hour
7:45 - 8:45

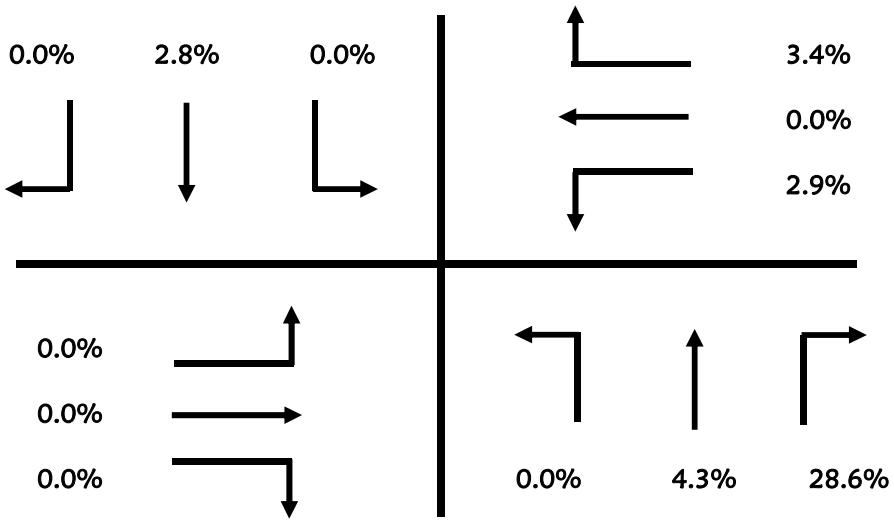

Roadway Count Summary

Vanasse Hangen Brustlin, Inc.

County	Flagler	**City**	Palm Coast
Intersection	Belle Terre Blvd	&	Ponce DeLeon Dr
Date	September 1, 2015		
Time Period	7:00 to 9:00		**U-Turn & RTOR**

VHB Project #: 62393

Time Period	Northbound			Southbound		
	Left	Through	Right	Left	Through	Right
7:00 - 7:15	0	0	0	0	0	0
7:15 - 7:30	0	0	0	0	0	0
7:30 - 7:45	0	0	0	0	0	0
7:45 - 8:00	0	0	0	0	0	0
8:00 - 8:15	0	0	0	2	0	0
8:15 - 8:30	0	0	0	0	0	0
8:30 - 8:45	0	0	0	0	0	0
8:45 - 9:00	0	0	0	1	0	0

Time Period	Eastbound			Westbound		
	Left	Through	Right	Left	Through	Right
7:00 - 7:15	0	0	0	0	0	0
7:15 - 7:30	0	0	0	0	0	0
7:30 - 7:45	0	0	0	0	0	0
7:45 - 8:00	0	0	0	0	0	0
8:00 - 8:15	0	0	0	0	0	0
8:15 - 8:30	0	0	0	0	0	0
8:30 - 8:45	0	0	0	0	0	0
8:45 - 9:00	0	0	0	0	0	0

North / South
Belle Terre Blvd

East / West
Ponce DeLeon Dr

Peak Hour
7:45 - 8:45

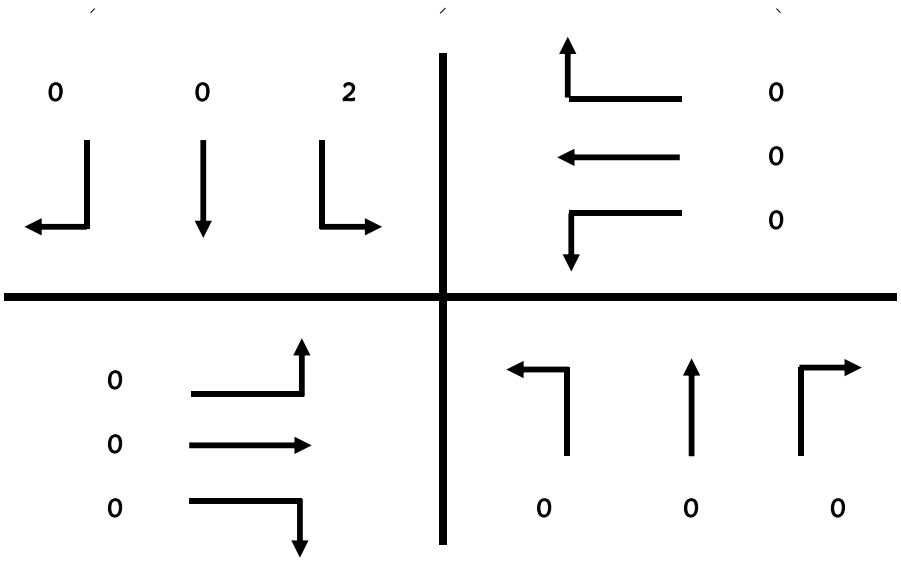

Roadway Count Summary

Vanasse Hangen Brustlin, Inc.

County	Flagler	**City**	Palm Coast
Intersection	Belle Terre Blvd	&	Ponce DeLeon Dr
Date	September 1, 2015		**All Vehicles**
Time Period	16:00 to 18:00		

VHB Project #: 62393

Time Period	Northbound Left	Northbound Through	Northbound Right	Southbound Left	Southbound Through	Southbound Right
16:00 - 16:15	0	217	11	22	196	0
16:15 - 16:30	0	228	8	19	192	0
16:30 - 16:45	0	241	11	15	188	0
16:45 - 17:00	0	281	11	20	192	0
17:00 - 17:15	0	275	9	17	197	0
17:15 - 17:30	0	260	11	23	220	0
17:30 - 17:45	0	278	9	13	206	0
17:45 - 18:00	0	250	7	18	217	0
	0	2,030	77	147	1,608	0

Time Period	Eastbound Left	Eastbound Through	Eastbound Right	Westbound Left	Westbound Through	Westbound Right
16:00 - 16:15	0	0	0	5	0	20
16:15 - 16:30	0	0	0	10	0	16
16:30 - 16:45	0	0	0	5	0	13
16:45 - 17:00	0	0	0	6	0	16
17:00 - 17:15	0	0	0	13	0	7
17:15 - 17:30	0	0	0	9	0	12
17:30 - 17:45	0	0	0	6	0	10
17:45 - 18:00	0	0	0	9	0	18
	0	0	0	63	0	112

North / South
Belle Terre Blvd

East / West
Ponce DeLeon Dr

Peak Hour
16:45 - 17:45

Peak Hour Factor
0.98

Total Pk Hr Voume
2,101

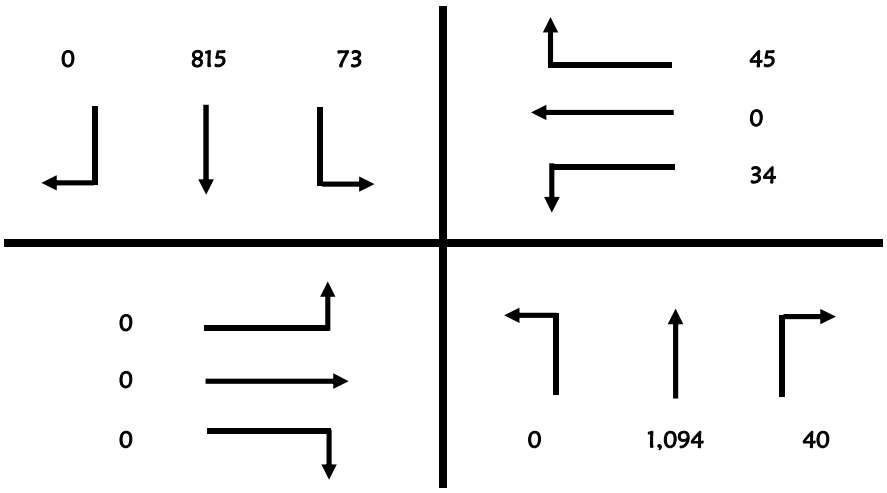

Roadway Count Summary

Vanasse Hangen Brustlin, Inc.

County	Flagler	**City**	Palm Coast
Intersection	Belle Terre Blvd	&	Ponce DeLeon Dr
Date	September 1, 2015		
Time Period	16:00 to 18:00		**Trucks**

VHB Project #: 62393

Time Period	Northbound			Southbound		
	Left	Through	Right	Left	Through	Right
16:00 - 16:15	0	2	1	0	4	0
16:15 - 16:30	0	1	0	0	2	0
16:30 - 16:45	0	1	0	0	6	0
16:45 - 17:00	0	1	0	0	3	0
17:00 - 17:15	0	1	0	0	2	0
17:15 - 17:30	0	2	0	1	2	0
17:30 - 17:45	0	0	0	0	3	0
17:45 - 18:00	0	3	0	0	2	0

Time Period	Eastbound			Westbound		
	Left	Through	Right	Left	Through	Right
16:00 - 16:15	0	0	0	0	0	0
16:15 - 16:30	0	0	0	0	0	1
16:30 - 16:45	0	0	0	0	0	0
16:45 - 17:00	0	0	0	0	0	0
17:00 - 17:15	0	0	0	0	0	0
17:15 - 17:30	0	0	0	1	0	1
17:30 - 17:45	0	0	0	0	0	0
17:45 - 18:00	0	0	0	0	0	0

North / South
Belle Terre Blvd

East / West
Ponce DeLeon Dr

Peak Hour
16:45 - 17:45

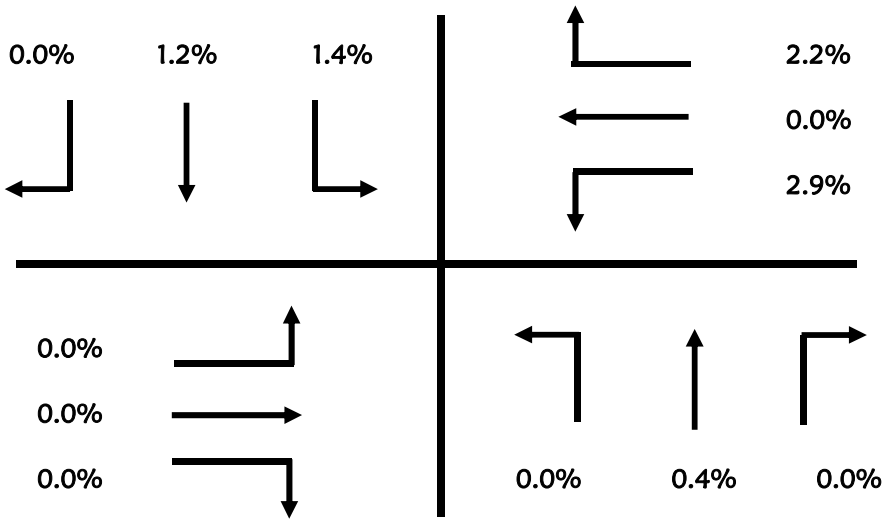

Roadway Count Summary

Vanasse Hangen Brustlin, Inc.

County	Flagler	**City**	Palm Coast
Intersection	Belle Terre Blvd	&	Ponce DeLeon Dr
Date	September 1, 2015		
Time Period	16:00 to 18:00		**U-Turn & RTOR**

VHB Project #: 62393

Time Period	Northbound			Southbound		
	Left	Through	Right	Left	Through	Right
16:00 - 16:15	0	0	0	0	0	0
16:15 - 16:30	0	0	0	1	0	0
16:30 - 16:45	0	0	0	0	0	0
16:45 - 17:00	0	0	0	0	0	0
17:00 - 17:15	0	0	0	0	0	0
17:15 - 17:30	0	0	0	0	0	0
17:30 - 17:45	0	0	0	0	0	0
17:45 - 18:00	0	0	0	0	0	0

Time Period	Eastbound			Westbound		
	Left	Through	Right	Left	Through	Right
16:00 - 16:15	0	0	0	0	0	0
16:15 - 16:30	0	0	0	0	0	0
16:30 - 16:45	0	0	0	0	0	0
16:45 - 17:00	0	0	0	0	0	0
17:00 - 17:15	0	0	0	0	0	0
17:15 - 17:30	0	0	0	0	0	0
17:30 - 17:45	0	0	0	0	0	0
17:45 - 18:00	0	0	0	0	0	0

North / South
Belle Terre Blvd

East / West
Ponce DeLeon Dr

Peak Hour
16:45 - 17:45

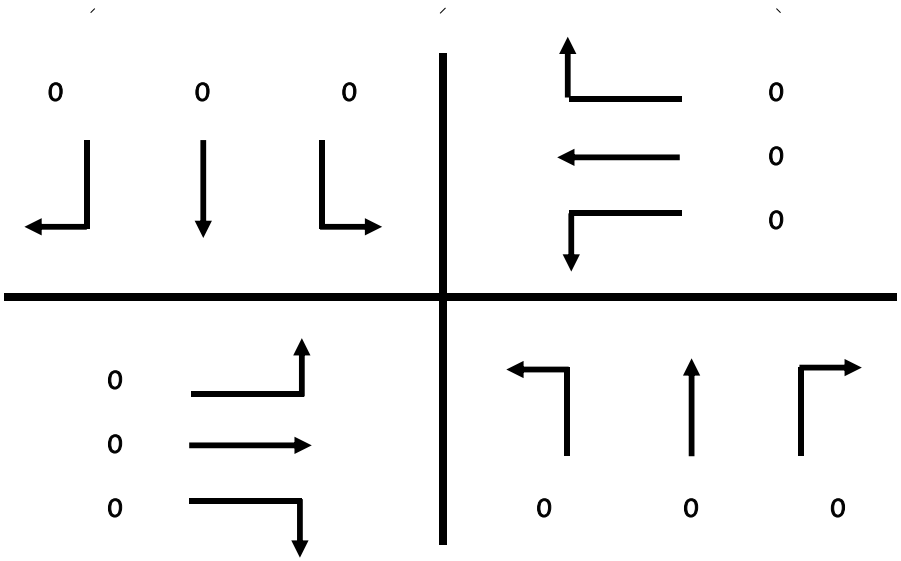

Pedestrian & Bicycle Summary

Project #: 62393 **NB/SB:** Belle Terre Blvd

Date: 9/1/2015 **EB/WB:** Ponce DeLeon Dr

Hour

		7:00	8:00		16:00	17:00				
		1	2	3	1	2	6	7	8	
Eastbound ▶	Bike	0	0		0	0				0
	Ped	0	0		0	0				0
Westbound ◀	Bike	1	7		2	1				11
	Ped	1	1		1	0				3

Hour	Southbound Ped ▼	Southbound Bike ▼	Northbound Ped ▲	Northbound Bike ▲
1 7:00	0	0	0	0
2 8:00	0	0	0	0
3				
4 16:00	0	0	0	0
5 17:00	0	0	0	0
6				
7				
8				
	0	0	0	0

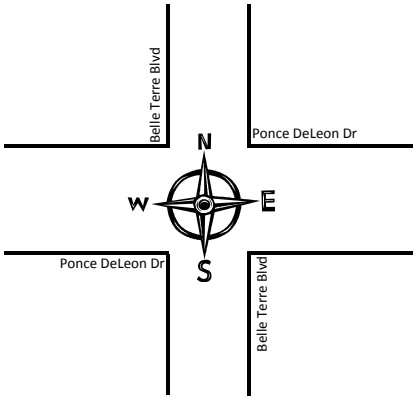

Southbound Ped ▼	Southbound Bike ▼	Northbound Ped ▲	Northbound Bike ▲	Hour
0	0	0	0	1 7:00
0	0	0	0	2 8:00
				3
1	0	0	0	4 16:00
0	0	0	0	5 17:00
				6
				7
				8
1	0	0	0	

		7:00	8:00		16:00	17:00				
		1	2	3	4	5	6	7	8	
Eastbound ▶	Bike	0	0		0	0				0
	Ped	0	0		0	0				0
Westbound ◀	Bike	4	1		2	2				9
	Ped	1	4		0	0				5

Hour

Roadway Count Summary

Vanasse Hangen Brustlin, Inc.

County	Flagler	**City**	Palm Coast
Intersection	Belle Terre Blvd	&	Pine Grove Dr
Date	September 1, 2015		**All Vehicles**
Time Period	7:00 to 9:00		

VHB Project #: 62393

Time Period	Northbound Left	Northbound Through	Northbound Right	Southbound Left	Southbound Through	Southbound Right
7:00 - 7:15	0	119	10	11	134	0
7:15 - 7:30	0	94	4	13	211	0
7:30 - 7:45	0	133	4	12	214	0
7:45 - 8:00	0	192	19	12	178	0
8:00 - 8:15	0	185	21	4	184	0
8:15 - 8:30	0	191	11	5	177	0
8:30 - 8:45	0	183	12	12	189	0
8:45 - 9:00	0	177	16	21	172	0
	0	1,274	97	90	1,459	0

Time Period	Eastbound Left	Eastbound Through	Eastbound Right	Westbound Left	Westbound Through	Westbound Right
7:00 - 7:15	0	0	0	27	0	26
7:15 - 7:30	0	0	0	35	0	17
7:30 - 7:45	0	0	0	33	0	19
7:45 - 8:00	0	0	0	40	0	23
8:00 - 8:15	0	0	0	27	0	19
8:15 - 8:30	0	0	0	23	0	28
8:30 - 8:45	0	0	0	19	0	20
8:45 - 9:00	0	0	0	25	0	18
	0	0	0	229	0	170

North / South
Belle Terre Blvd

East / West
Pine Grove Dr

Peak Hour
7:45 - 8:45

Peak Hour Factor
0.96

Total Pk Hr Voume
1,774

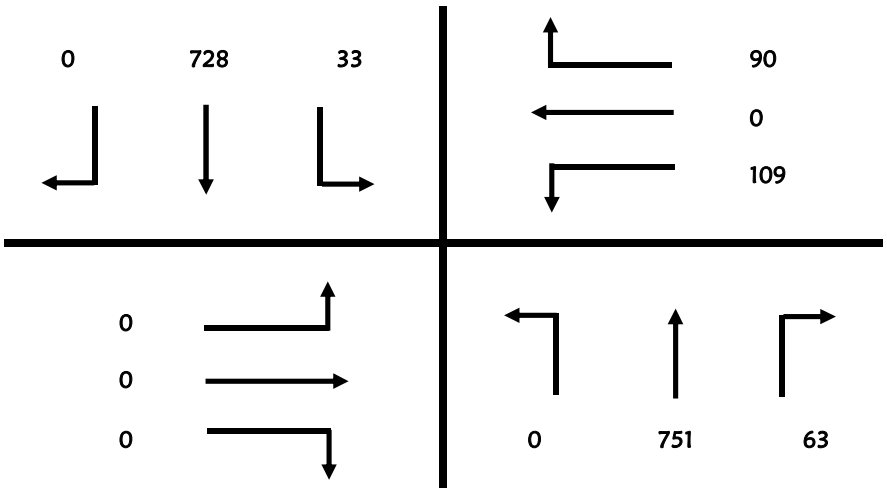

Roadway Count Summary

Vanasse Hangen Brustlin, Inc.

County	Flagler	**City**	Palm Coast
Intersection	Belle Terre Blvd	&	Pine Grove Dr
Date	September 1, 2015		
Time Period	7:00 to 9:00		**Trucks**

VHB Project #: 62393

Time Period	Northbound			Southbound		
	Left	Through	Right	Left	Through	Right
7:00 - 7:15	0	8	2	0	8	0
7:15 - 7:30	0	3	0	1	19	0
7:30 - 7:45	0	1	0	0	3	0
7:45 - 8:00	0	8	2	0	3	0
8:00 - 8:15	0	11	3	0	3	0
8:15 - 8:30	0	7	2	0	9	0
8:30 - 8:45	0	4	0	0	7	0
8:45 - 9:00	0	6	1	0	8	0

Time Period	Eastbound			Westbound		
	Left	Through	Right	Left	Through	Right
7:00 - 7:15	0	0	0	0	0	0
7:15 - 7:30	0	0	0	0	0	0
7:30 - 7:45	0	0	0	0	0	0
7:45 - 8:00	0	0	0	1	0	0
8:00 - 8:15	0	0	0	0	0	0
8:15 - 8:30	0	0	0	0	0	3
8:30 - 8:45	0	0	0	0	0	0
8:45 - 9:00	0	0	0	0	0	0

North / South
Belle Terre Blvd

East / West
Pine Grove Dr

Peak Hour
7:45 - 8:45

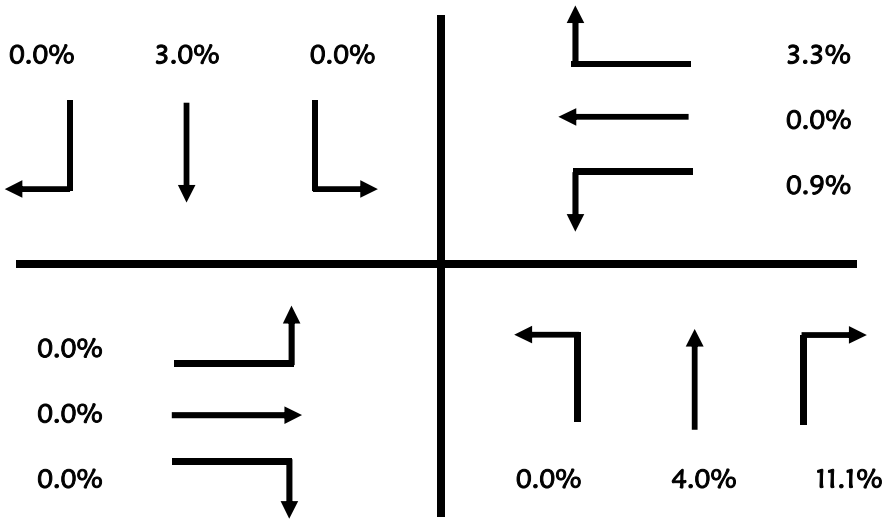

Roadway Count Summary

Vanasse Hangen Brustlin, Inc.

County	Flagler	**City**	Palm Coast
Intersection	Belle Terre Blvd	&	Pine Grove Dr
Date	September 1, 2015		
Time Period	7:00 to 9:00		**U-Turn & RTOR**

VHB Project #: 62393

Time Period	Northbound			Southbound		
	Left	Through	Right	Left	Through	Right
7:00 - 7:15	0	0	0	0	0	0
7:15 - 7:30	0	0	0	0	0	0
7:30 - 7:45	0	0	0	0	0	0
7:45 - 8:00	0	0	0	1	0	0
8:00 - 8:15	0	0	0	0	0	0
8:15 - 8:30	0	0	0	0	0	0
8:30 - 8:45	0	0	0	1	0	0
8:45 - 9:00	0	0	0	0	0	0

Time Period	Eastbound			Westbound		
	Left	Through	Right	Left	Through	Right
7:00 - 7:15	0	0	0	0	0	0
7:15 - 7:30	0	0	0	0	0	0
7:30 - 7:45	0	0	0	0	0	0
7:45 - 8:00	0	0	0	0	0	0
8:00 - 8:15	0	0	0	0	0	0
8:15 - 8:30	0	0	0	0	0	0
8:30 - 8:45	0	0	0	0	0	0
8:45 - 9:00	0	0	0	0	0	0

North / South
Belle Terre Blvd

East / West
Pine Grove Dr

Peak Hour
7:45 - 8:45

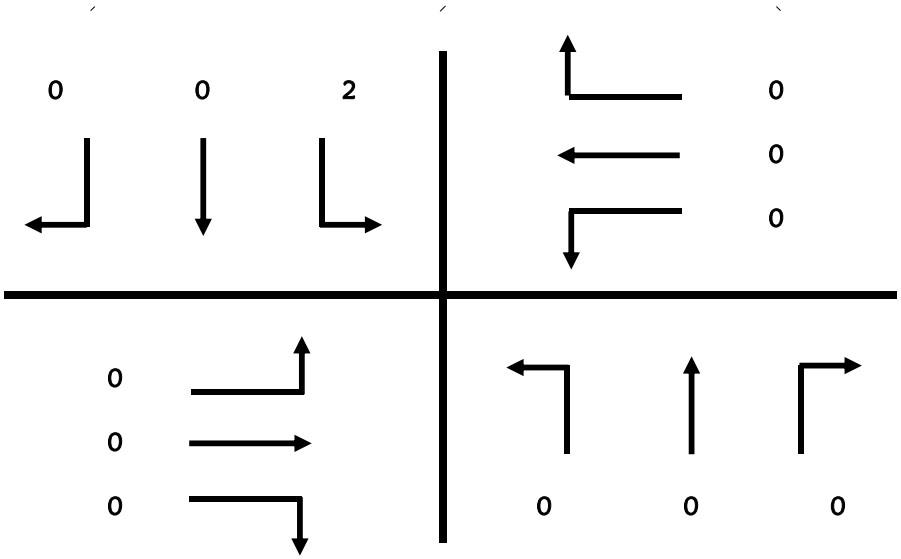

Roadway Count Summary

Vanasse Hangen Brustlin, Inc.

County	Flagler	**City**	Palm Coast
Intersection	Belle Terre Blvd	&	Pine Grove Dr
Date	September 1, 2015		**All Vehicles**
Time Period	16:00 to 18:00		

VHB Project #: 62393

Time Period	Northbound Left	Northbound Through	Northbound Right	Southbound Left	Southbound Through	Southbound Right
16:00 - 16:15	0	212	24	21	203	0
16:15 - 16:30	0	230	23	23	200	0
16:30 - 16:45	0	227	27	23	176	0
16:45 - 17:00	0	263	42	13	198	0
17:00 - 17:15	0	270	23	20	190	0
17:15 - 17:30	0	228	43	28	219	0
17:30 - 17:45	0	223	54	20	194	0
17:45 - 18:00	0	228	31	23	214	0
	0	1,881	267	171	1,594	0

Time Period	Eastbound Left	Eastbound Through	Eastbound Right	Westbound Left	Westbound Through	Westbound Right
16:00 - 16:15	0	0	0	12	0	12
16:15 - 16:30	0	0	0	17	0	10
16:30 - 16:45	0	0	0	18	0	13
16:45 - 17:00	0	0	0	17	0	7
17:00 - 17:15	0	0	0	23	0	13
17:15 - 17:30	0	0	0	19	0	8
17:30 - 17:45	0	0	0	18	0	10
17:45 - 18:00	0	0	0	21	0	17
	0	0	0	145	0	90

North / South
Belle Terre Blvd

East / West
Pine Grove Dr

Peak Hour
16:45 - 17:45

Peak Hour Factor
0.98

Total Pk Hr Voume
2,143

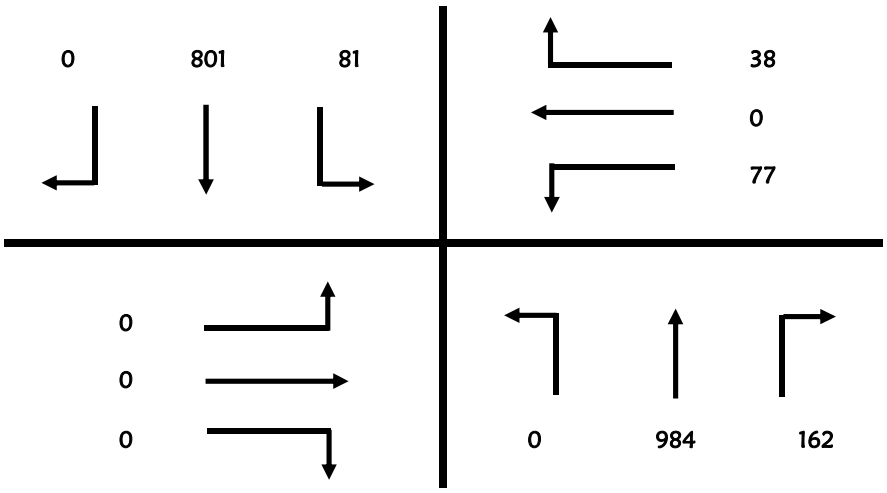

Roadway Count Summary

Vanasse Hangen Brustlin, Inc.

County	Flagler	**City**	Palm Coast
Intersection	Belle Terre Blvd	&	Pine Grove Dr
Date	September 1, 2015		
Time Period	16:00 to 18:00		**Trucks**

VHB Project #: 62393

Time Period	Northbound Left	Northbound Through	Northbound Right	Southbound Left	Southbound Through	Southbound Right
16:00 - 16:15	0	2	0	0	4	0
16:15 - 16:30	0	3	0	0	2	0
16:30 - 16:45	0	0	0	0	5	0
16:45 - 17:00	0	1	0	0	3	0
17:00 - 17:15	0	1	0	1	1	0
17:15 - 17:30	0	2	0	0	2	0
17:30 - 17:45	0	0	0	0	3	0
17:45 - 18:00	0	1	1	0	1	0

Time Period	Eastbound Left	Eastbound Through	Eastbound Right	Westbound Left	Westbound Through	Westbound Right
16:00 - 16:15	0	0	0	0	0	1
16:15 - 16:30	0	0	0	0	0	0
16:30 - 16:45	0	0	0	1	0	0
16:45 - 17:00	0	0	0	0	0	1
17:00 - 17:15	0	0	0	0	0	0
17:15 - 17:30	0	0	0	1	0	0
17:30 - 17:45	0	0	0	0	0	0
17:45 - 18:00	0	0	0	0	0	0

North / South
Belle Terre Blvd

East / West
Pine Grove Dr

Peak Hour
16:45 - 17:45

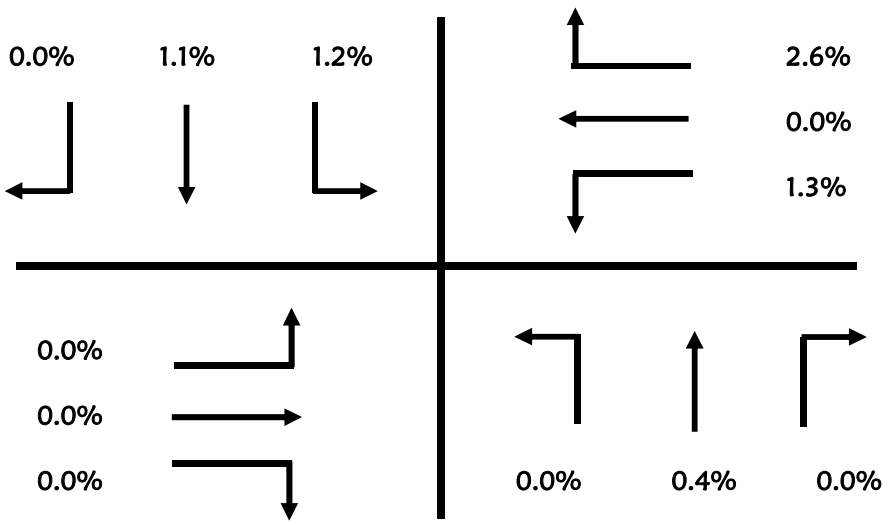

Roadway Count Summary

Vanasse Hangen Brustlin, Inc.

County	Flagler	**City**	Palm Coast
Intersection	Belle Terre Blvd	&	Pine Grove Dr
Date	September 1, 2015		
Time Period	16:00 to 18:00		**U-Turn & RTOR**

VHB Project #: 62393

Time Period	Northbound			Southbound		
	Left	Through	Right	Left	Through	Right
16:00 - 16:15	0	0	0	0	0	0
16:15 - 16:30	0	0	0	0	0	0
16:30 - 16:45	0	0	0	0	0	0
16:45 - 17:00	0	0	0	0	0	0
17:00 - 17:15	0	0	0	0	0	0
17:15 - 17:30	0	0	0	0	0	0
17:30 - 17:45	0	0	0	0	0	0
17:45 - 18:00	0	0	0	0	0	0

Time Period	Eastbound			Westbound		
	Left	Through	Right	Left	Through	Right
16:00 - 16:15	0	0	0	0	0	0
16:15 - 16:30	0	0	0	0	0	0
16:30 - 16:45	0	0	0	0	0	0
16:45 - 17:00	0	0	0	0	0	0
17:00 - 17:15	0	0	0	0	0	0
17:15 - 17:30	0	0	0	0	0	0
17:30 - 17:45	0	0	0	0	0	0
17:45 - 18:00	0	0	0	0	0	0

North / South
Belle Terre Blvd

East / West
Pine Grove Dr

Peak Hour
16:45 - 17:45

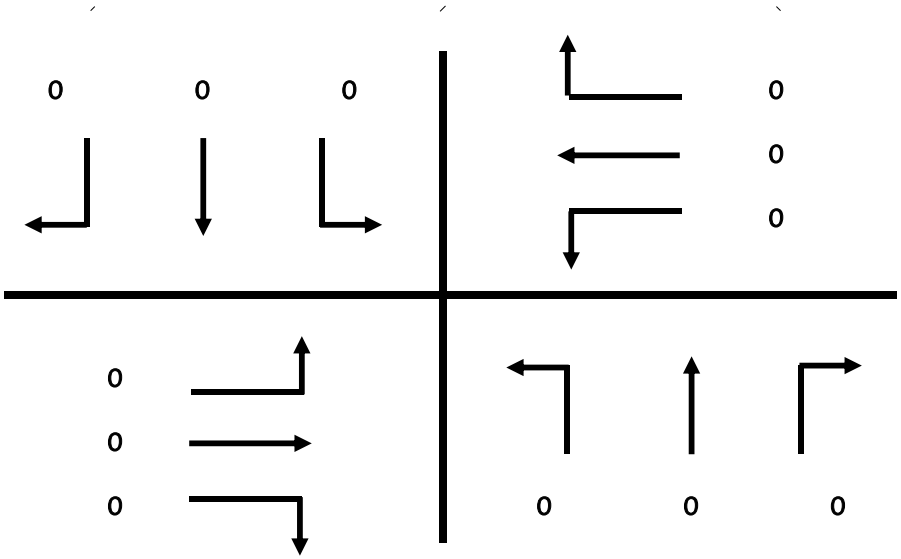

Pedestrian & Bicycle Summary

Project #: 62393
Date: 9/1/2015

NB/SB: Belle Terre Blvd
EB/WB: Pine Grove Dr

Hour

			7:00	8:00		16:00	17:00				
			1	2	3	4	5	6	7	8	
Eastbound	▶	Bike	0	0		0	0				**0**
		Ped	0	0		0	0				**0**
Westbound	◀	Bike	0	7		4	1				**12**
		Ped	2	0		0	0				**2**

	Southbound		Northbound		
Hour	Ped ▼	Bike	Ped ▲	Bike	Hour
1 7:00	0	0	0	0	1 7:00
2 8:00	0	0	0	0	2 8:00
3					3
4 16:00	0	0	0	0	4 16:00
5 17:00	0	0	0	0	5 17:00
6					6
7					7
8					8
	0	**0**	**0**	**0**	

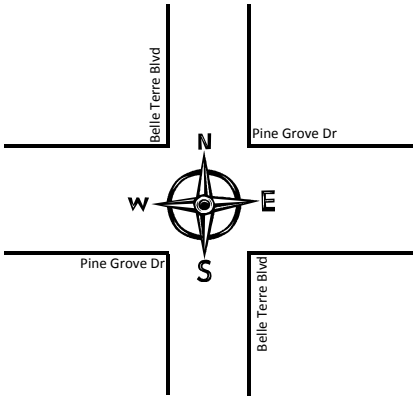

	Southbound		Northbound		
	Ped ▼	Bike	Ped ▲	Bike	Hour
1	0	0	0	0	1 7:00
2	0	0	0	0	2 8:00
3					3
4	0	0	0	0	4 16:00
5	0	0	0	0	5 17:00
6					6
7					7
8					8
	0	**0**	**0**	**0**	

Eastbound	▶	Bike	0	0		0	0				**0**
		Ped	0	0		0	0				**0**
Westbound	◀	Bike	3	1		1	0				**5**
		Ped	2	2		1	0				**5**
			7:00	8:00		16:00	17:00				
			1	2	3	4	5	6	7	8	

Hour

Roadway Count Summary

Vanasse Hangen Brustlin, Inc.

County	Flagler	**City**	Palm Coast
Intersection	Belle Terre Blvd		& Whiteview Pkwy
Date	September 1, 2015		**All Vehicles**
Time Period	7:00 to 9:00		

VHB Project #: 62393

Time Period	Northbound Left	Northbound Through	Northbound Right	Southbound Left	Southbound Through	Southbound Right
7:00 - 7:15	11	124	4	2	112	23
7:15 - 7:30	11	95	5	11	155	28
7:30 - 7:45	21	124	8	3	135	13
7:45 - 8:00	23	188	13	11	138	24
8:00 - 8:15	34	159	10	7	110	18
8:15 - 8:30	30	179	8	7	132	18
8:30 - 8:45	27	168	8	17	145	27
8:45 - 9:00	21	167	3	10	156	12
	178	1,204	59	68	1,083	163

Time Period	Eastbound Left	Eastbound Through	Eastbound Right	Westbound Left	Westbound Through	Westbound Right
7:00 - 7:15	37	3	23	21	16	19
7:15 - 7:30	21	3	27	40	18	22
7:30 - 7:45	21	7	47	44	16	18
7:45 - 8:00	29	2	38	31	14	22
8:00 - 8:15	19	3	31	30	17	20
8:15 - 8:30	31	3	30	29	18	27
8:30 - 8:45	38	3	27	23	16	20
8:45 - 9:00	34	4	30	17	15	22
	230	28	253	235	130	170

North / South
Belle Terre Blvd

East / West
Whiteview Pkwy

Peak Hour
7:45 - 8:45

Peak Hour Factor
0.95

Total Pk Hr Voume
2,022

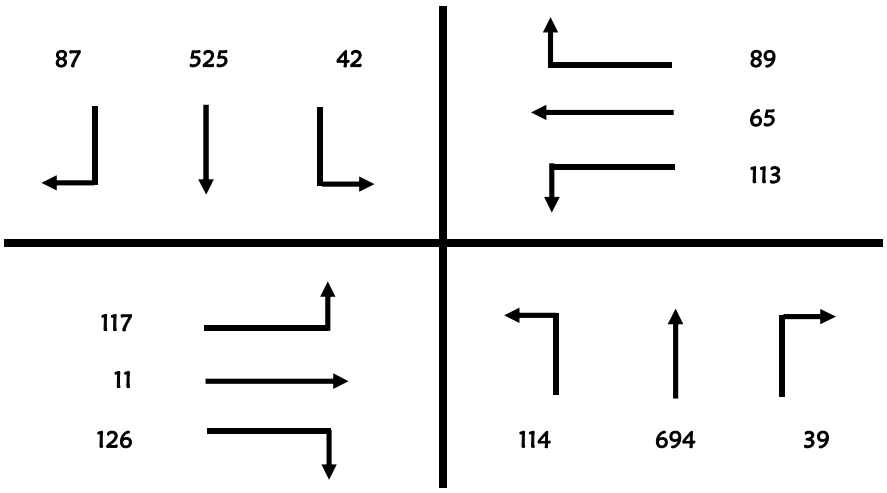

Roadway Count Summary

Vanasse Hangen Brustlin, Inc.

County	Flagler	**City**	Palm Coast
Intersection	Belle Terre Blvd	&	Whiteview Pkwy
Date	September 1, 2015		
Time Period	7:00 to 9:00		**Trucks**

VHB Project #: 62393

Time Period	Northbound			Southbound		
	Left	Through	Right	Left	Through	Right
7:00 - 7:15	2	7	0	0	11	5
7:15 - 7:30	1	1	0	0	10	4
7:30 - 7:45	0	0	1	0	2	0
7:45 - 8:00	0	8	0	1	2	0
8:00 - 8:15	3	4	3	0	4	0
8:15 - 8:30	0	7	0	1	8	1
8:30 - 8:45	0	4	0	0	8	1
8:45 - 9:00	1	4	1	0	3	1

Time Period	Eastbound			Westbound		
	Left	Through	Right	Left	Through	Right
7:00 - 7:15	5	0	0	0	0	0
7:15 - 7:30	1	0	1	3	0	0
7:30 - 7:45	0	2	0	0	1	0
7:45 - 8:00	0	0	0	0	0	0
8:00 - 8:15	1	0	0	1	1	1
8:15 - 8:30	2	0	0	0	1	1
8:30 - 8:45	0	0	0	0	1	0
8:45 - 9:00	1	0	2	0	0	0

North / South
Belle Terre Blvd

East / West
Whiteview Pkwy

Peak Hour
7:45 - 8:45

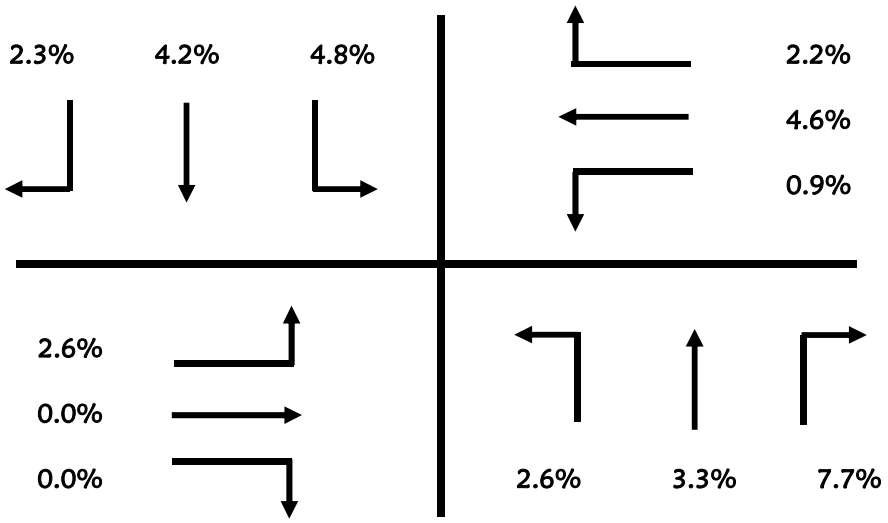

Roadway Count Summary

Vanasse Hangen Brustlin, Inc.

County	Flagler	**City**	Palm Coast
Intersection	Belle Terre Blvd	&	Whiteview Pkwy
Date	September 1, 2015		
Time Period	7:00 to 9:00		**U-Turn & RTOR**

VHB Project #: 62393

Time Period	Northbound			Southbound		
	Left	Through	Right	Left	Through	Right
7:00 - 7:15	0	0	0	0	0	5
7:15 - 7:30	0	0	2	0	0	8
7:30 - 7:45	0	0	2	0	0	5
7:45 - 8:00	0	0	7	1	0	12
8:00 - 8:15	1	0	2	1	0	7
8:15 - 8:30	0	0	1	2	0	4
8:30 - 8:45	0	0	0	0	0	7
8:45 - 9:00	0	0	1	0	0	1

Time Period	Eastbound			Westbound		
	Left	Through	Right	Left	Through	Right
7:00 - 7:15	0	0	11	0	0	12
7:15 - 7:30	0	0	7	0	0	8
7:30 - 7:45	0	0	15	0	0	8
7:45 - 8:00	0	0	20	0	0	8
8:00 - 8:15	0	0	13	0	0	6
8:15 - 8:30	0	0	5	0	0	5
8:30 - 8:45	0	0	4	0	0	9
8:45 - 9:00	0	0	10	0	0	5

North / South
Belle Terre Blvd

East / West
Whiteview Pkwy

Peak Hour
7:45 - 8:45

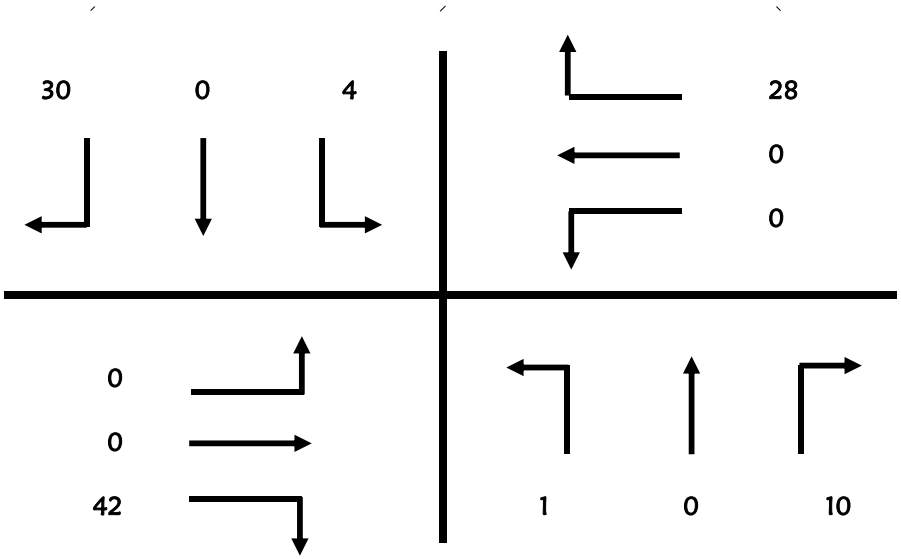

Roadway Count Summary

Vanasse Hangen Brustlin, Inc.

County	Flagler	**City**	Palm Coast
Intersection	Belle Terre Blvd		& Whiteview Pkwy
Date	September 1, 2015		**All Vehicles**
Time Period	16:00 to 18:00		

VHB Project #: 62393

Time Period	Northbound Left	Northbound Through	Northbound Right	Southbound Left	Southbound Through	Southbound Right
16:00 - 16:15	23	189	17	18	202	31
16:15 - 16:30	28	185	18	15	169	23
16:30 - 16:45	28	196	18	20	171	26
16:45 - 17:00	29	218	18	13	172	24
17:00 - 17:15	35	211	21	15	177	36
17:15 - 17:30	30	186	17	15	211	44
17:30 - 17:45	24	185	26	15	184	35
17:45 - 18:00	35	180	27	14	197	37
	232	1,550	162	125	1,483	256

Time Period	Eastbound Left	Eastbound Through	Eastbound Right	Westbound Left	Westbound Through	Westbound Right
16:00 - 16:15	23	14	22	9	4	9
16:15 - 16:30	30	14	24	16	4	18
16:30 - 16:45	20	8	19	13	1	12
16:45 - 17:00	29	12	21	15	2	9
17:00 - 17:15	23	15	28	14	11	16
17:15 - 17:30	30	22	21	20	7	7
17:30 - 17:45	29	15	21	19	6	9
17:45 - 18:00	27	21	30	13	13	19
	211	121	186	119	48	99

North / South
Belle Terre Blvd

East / West
Whiteview Pkwy

Peak Hour
17:00 - 18:00

Peak Hour Factor
0.98

Total Pk Hr Voume
2,393

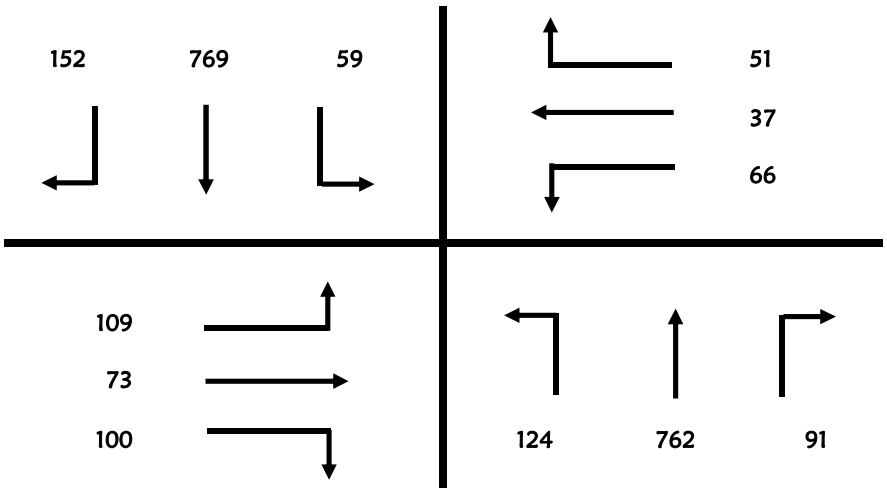

Roadway Count Summary

Vanasse Hangen Brustlin, Inc.

County	Flagler	**City**	Palm Coast
Intersection	Belle Terre Blvd	&	Whiteview Pkwy
Date	September 1, 2015		
Time Period	16:00 to 18:00		**Trucks**

VHB Project #: 62393

Time Period	Northbound			Southbound		
	Left	Through	Right	Left	Through	Right
16:00 - 16:15	0	3	0	0	3	1
16:15 - 16:30	1	1	0	2	2	1
16:30 - 16:45	0	0	0	0	5	0
16:45 - 17:00	0	2	0	0	1	0
17:00 - 17:15	1	0	0	0	4	0
17:15 - 17:30	1	1	0	0	2	0
17:30 - 17:45	0	0	0	1	1	0
17:45 - 18:00	0	1	0	0	2	0

Time Period	Eastbound			Westbound		
	Left	Through	Right	Left	Through	Right
16:00 - 16:15	0	1	0	0	0	0
16:15 - 16:30	0	0	0	0	0	0
16:30 - 16:45	0	0	0	0	0	0
16:45 - 17:00	0	0	0	0	0	1
17:00 - 17:15	0	0	0	0	0	1
17:15 - 17:30	0	0	0	0	0	0
17:30 - 17:45	0	0	0	0	0	0
17:45 - 18:00	0	0	0	0	0	0

North / South
Belle Terre Blvd

East / West
Whiteview Pkwy

Peak Hour
17:00 - 18:00

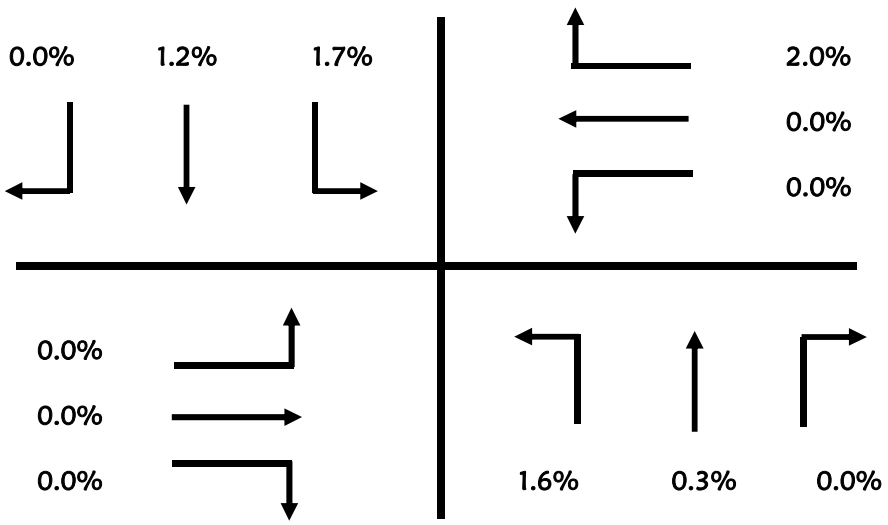

Roadway Count Summary

Vanasse Hangen Brustlin, Inc.

County	Flagler	**City**	Palm Coast
Intersection	Belle Terre Blvd	&	Whiteview Pkwy
Date	September 1, 2015		
Time Period	16:00 to 18:00		**U-Turn & RTOR**

VHB Project #: 62393

Time Period	Northbound Left	Northbound Through	Northbound Right	Southbound Left	Southbound Through	Southbound Right
16:00 - 16:15	0	0	11	1	0	10
16:15 - 16:30	1	0	7	0	0	3
16:30 - 16:45	0	0	6	2	0	3
16:45 - 17:00	1	0	6	0	0	4
17:00 - 17:15	1	0	3	0	0	7
17:15 - 17:30	0	0	2	0	0	17
17:30 - 17:45	3	0	2	0	0	11
17:45 - 18:00	0	0	7	1	0	16

Time Period	Eastbound Left	Eastbound Through	Eastbound Right	Westbound Left	Westbound Through	Westbound Right
16:00 - 16:15	0	0	11	0	0	3
16:15 - 16:30	0	0	8	0	0	11
16:30 - 16:45	0	0	7	0	0	3
16:45 - 17:00	0	0	9	0	0	0
17:00 - 17:15	0	0	14	0	0	6
17:15 - 17:30	0	0	9	0	0	5
17:30 - 17:45	0	0	14	0	0	3
17:45 - 18:00	0	0	14	0	0	6

North / South
Belle Terre Blvd

East / West
Whiteview Pkwy

Peak Hour
17:00 - 18:00

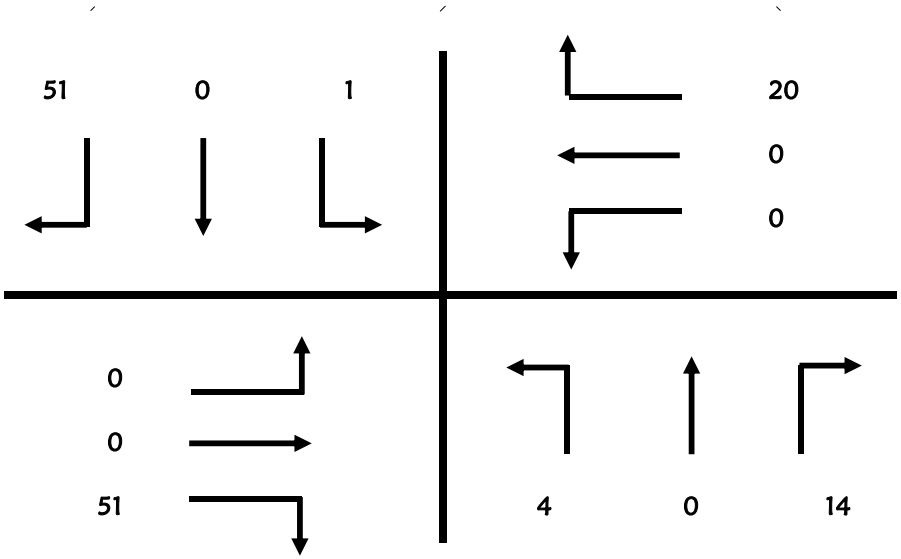

Pedestrian & Bicycle Summary

Project #: 62393 **NB/SB:** Belle Terre Blvd

Date: 9/1/2015 **EB/WB:** Whiteview Pkwy

Hour

		7:00 (1)	8:00 (2)	(3)	16:00 (4)	17:00 (5)	(6)	(7)	(8)	
Eastbound ▶	Bike	2	4		0	0				6
	Ped	1	1		0	0				2
Westbound ◀	Bike	2	6		1	5				14
	Ped	1	1		2	0				4

Hour	Southbound Ped ▼	Southbound Bike ▼	Northbound Ped ▲	Northbound Bike ▲
1 7:00	0	0	0	0
2 8:00	0	0	1	1
3				
4 16:00	0	0	0	0
5 17:00	0	0	0	0
6				
7				
8				
	0	0	1	1

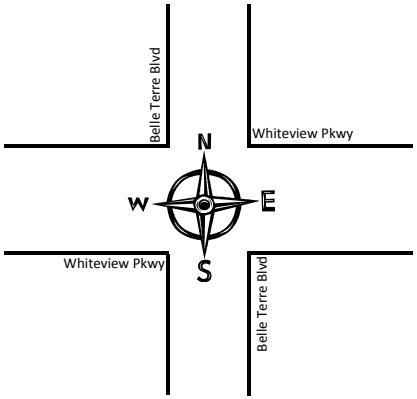

Hour	Southbound Ped ▼	Southbound Bike ▼	Northbound Ped ▲	Northbound Bike ▲	Hour
1	0	0	0	1	1 7:00
2	0	0	0	0	2 8:00
3					3
4	0	0	0	0	4 16:00
5	0	0	0	0	5 17:00
6					6
7					7
8					8
	0	0	0	1	

		7:00 (1)	8:00 (2)	(3)	16:00 (4)	17:00 (5)	(6)	(7)	(8)	
Eastbound ▶	Bike	5	1		1	1				8
	Ped	0	0		0	0				0
Westbound ◀	Bike	2	1		3	3				9
	Ped	1	2		0	1				4

Hour

Roadway Count Summary

Vanasse Hangen Brustlin, Inc.

County	Flagler	**City**	Palm Coast
Intersection	Belle Terre Blvd		& Whippoorwill Dr
Date	September 1, 2015		**All Vehicles**
Time Period	7:00 to 9:00		

VHB Project #: 62393

Time Period	Northbound Left	Northbound Through	Northbound Right	Southbound Left	Southbound Through	Southbound Right
7:00 - 7:15	3	185	0	0	131	5
7:15 - 7:30	2	129	0	0	183	7
7:30 - 7:45	2	166	0	0	146	4
7:45 - 8:00	8	222	0	0	154	2
8:00 - 8:15	7	189	0	0	121	8
8:15 - 8:30	7	237	0	0	151	6
8:30 - 8:45	10	211	0	0	186	12
8:45 - 9:00	5	216	0	0	163	12
	44	1,555	0	0	1,235	56

Time Period	Eastbound Left	Eastbound Through	Eastbound Right	Westbound Left	Westbound Through	Westbound Right
7:00 - 7:15	15	0	7	0	0	0
7:15 - 7:30	6	0	16	0	0	0
7:30 - 7:45	10	0	13	0	0	0
7:45 - 8:00	11	0	11	0	0	0
8:00 - 8:15	12	0	19	0	0	0
8:15 - 8:30	23	0	7	0	0	0
8:30 - 8:45	11	0	9	0	0	0
8:45 - 9:00	9	0	7	0	0	0
	97	0	89	0	0	0

North / South
Belle Terre Blvd

East / West
Whippoorwill Dr

Peak Hour
8:00 - 9:00

Peak Hour Factor
0.93

Total Pk Hr Voume
1,638

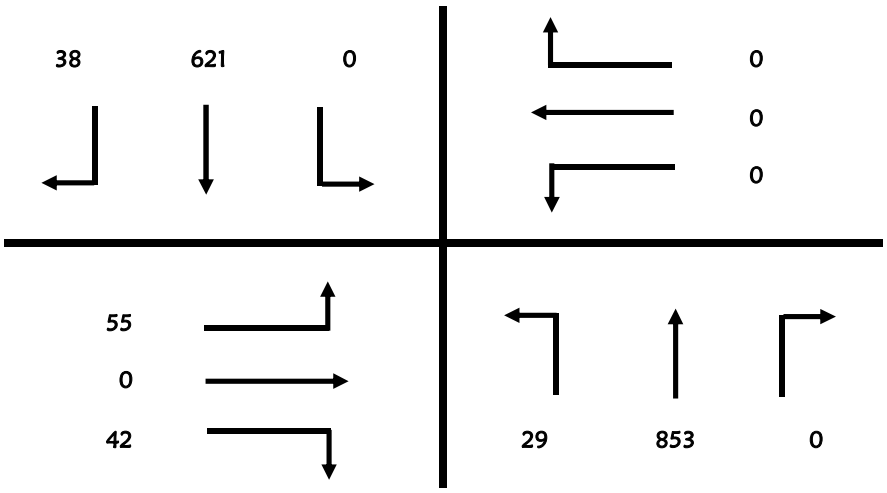

Roadway Count Summary

Vanasse Hangen Brustlin, Inc.

County	Flagler	**City**	Palm Coast
Intersection	Belle Terre Blvd	&	Whippoorwill Dr
Date	September 1, 2015		
Time Period	7:00 to 9:00		**Trucks**

VHB Project #: 62393

Time Period	Northbound Left	Northbound Through	Northbound Right	Southbound Left	Southbound Through	Southbound Right
7:00 - 7:15	0	11	0	0	15	0
7:15 - 7:30	0	2	0	0	15	0
7:30 - 7:45	0	0	0	0	2	0
7:45 - 8:00	1	7	0	0	3	0
8:00 - 8:15	1	5	0	0	4	1
8:15 - 8:30	0	12	0	0	9	0
8:30 - 8:45	0	5	0	0	9	0
8:45 - 9:00	0	5	0	0	4	0

Time Period	Eastbound Left	Eastbound Through	Eastbound Right	Westbound Left	Westbound Through	Westbound Right
7:00 - 7:15	0	0	0	0	0	0
7:15 - 7:30	0	0	1	0	0	0
7:30 - 7:45	0	0	0	0	0	0
7:45 - 8:00	0	0	0	0	0	0
8:00 - 8:15	0	0	0	0	0	0
8:15 - 8:30	1	0	0	0	0	0
8:30 - 8:45	0	0	0	0	0	0
8:45 - 9:00	0	0	0	0	0	0

North / South
Belle Terre Blvd

East / West
Whippoorwill Dr

Peak Hour
8:00 - 9:00

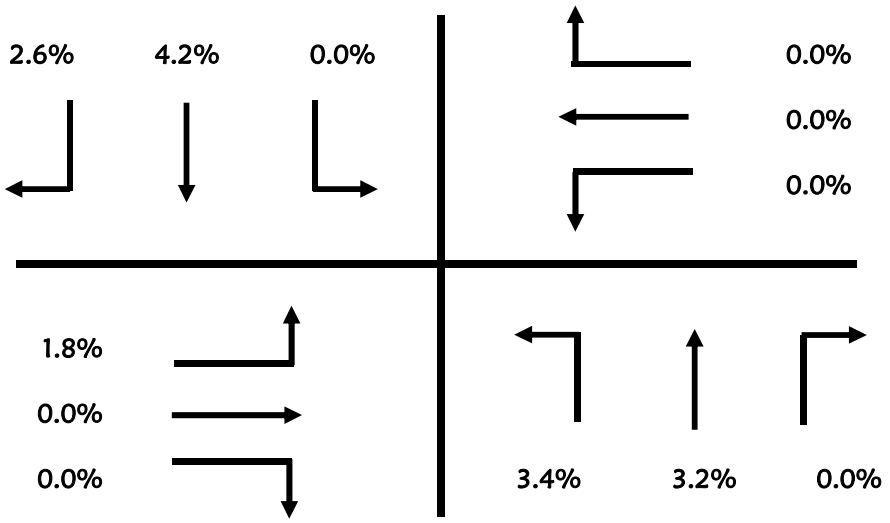

Roadway Count Summary

Vanasse Hangen Brustlin, Inc.

County	Flagler	**City**	Palm Coast
Intersection	Belle Terre Blvd	&	Whippoorwill Dr
Date	September 1, 2015		
Time Period	7:00 to 9:00		**U-Turn & RTOR**

VHB Project #: 62393

Time Period	Northbound Left	Northbound Through	Northbound Right	Southbound Left	Southbound Through	Southbound Right
7:00 - 7:15	0	0	0	0	0	0
7:15 - 7:30	0	0	0	0	0	0
7:30 - 7:45	0	0	0	0	0	0
7:45 - 8:00	1	0	0	0	0	0
8:00 - 8:15	0	0	0	0	0	0
8:15 - 8:30	0	0	0	0	0	0
8:30 - 8:45	0	0	0	0	0	0
8:45 - 9:00	0	0	0	0	0	0

Time Period	Eastbound Left	Eastbound Through	Eastbound Right	Westbound Left	Westbound Through	Westbound Right
7:00 - 7:15	0	0	0	0	0	0
7:15 - 7:30	0	0	0	0	0	0
7:30 - 7:45	0	0	0	0	0	0
7:45 - 8:00	0	0	0	0	0	0
8:00 - 8:15	0	0	0	0	0	0
8:15 - 8:30	0	0	0	0	0	0
8:30 - 8:45	0	0	0	0	0	0
8:45 - 9:00	0	0	0	0	0	0

North / South
Belle Terre Blvd

East / West
Whippoorwill Dr

Peak Hour
8:00 - 9:00

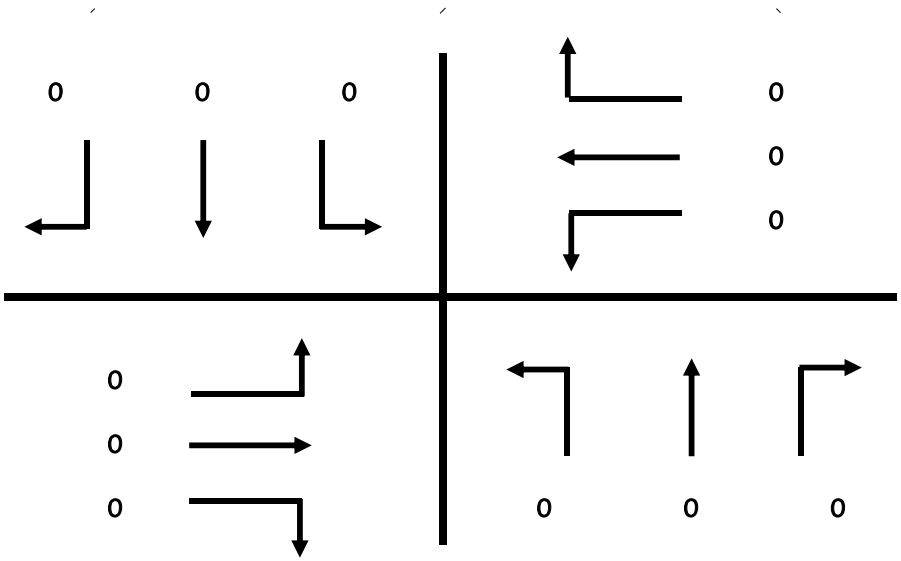

Roadway Count Summary

Vanasse Hangen Brustlin, Inc.

County	Flagler	**City**	Palm Coast
Intersection	Belle Terre Blvd		& Whippoorwill Dr
Date	September 1, 2015		**All Vehicles**
Time Period	16:00 to 18:00		

VHB Project #: 62393

Time Period	Northbound Left	Northbound Through	Northbound Right	Southbound Left	Southbound Through	Southbound Right
16:00 - 16:15	16	208	0	0	235	10
16:15 - 16:30	13	219	0	0	207	16
16:30 - 16:45	22	208	0	0	207	11
16:45 - 17:00	25	239	0	0	200	8
17:00 - 17:15	19	234	0	0	217	12
17:15 - 17:30	19	200	0	0	255	20
17:30 - 17:45	16	213	0	0	227	13
17:45 - 18:00	14	214	0	0	241	11
	144	1,735	0	0	1,789	101

Time Period	Eastbound Left	Eastbound Through	Eastbound Right	Westbound Left	Westbound Through	Westbound Right
16:00 - 16:15	8	0	9	0	0	0
16:15 - 16:30	8	0	10	0	0	0
16:30 - 16:45	4	0	7	0	0	0
16:45 - 17:00	12	0	10	0	0	0
17:00 - 17:15	8	0	10	0	0	0
17:15 - 17:30	10	0	10	0	0	0
17:30 - 17:45	14	0	5	0	0	0
17:45 - 18:00	3	0	8	0	0	0
	67	0	69	0	0	0

North / South
Belle Terre Blvd

East / West
Whippoorwill Dr

Peak Hour
16:45 - 17:45

Peak Hour Factor
0.97

Total Pk Hr Voume
1,996

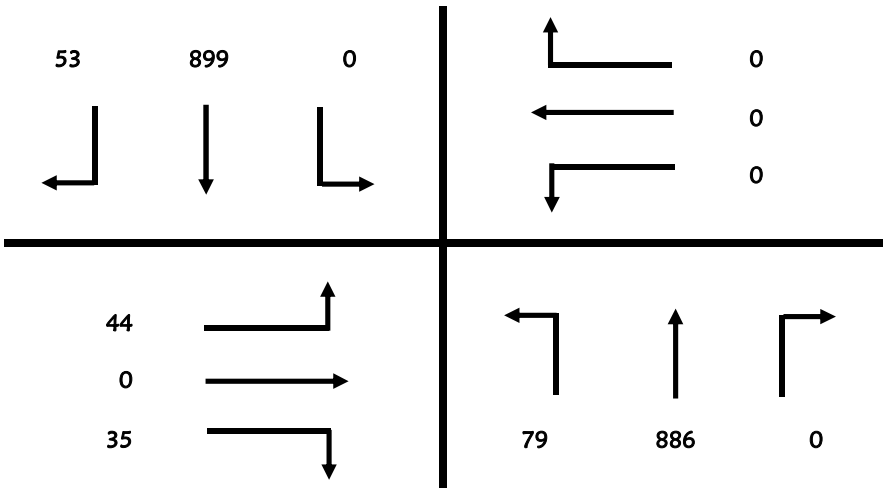

Roadway Count Summary

Vanasse Hangen Brustlin, Inc.

County	Flagler	**City**	Palm Coast
Intersection	Belle Terre Blvd	&	Whippoorwill Dr
Date	September 1, 2015		
Time Period	16:00 to 18:00		**Trucks**

VHB Project #: 62393

Time Period	Northbound			Southbound		
	Left	Through	Right	Left	Through	Right
16:00 - 16:15	0	2	0	0	2	0
16:15 - 16:30	0	2	0	0	4	0
16:30 - 16:45	1	0	0	0	5	0
16:45 - 17:00	0	3	0	0	1	0
17:00 - 17:15	1	0	0	0	4	0
17:15 - 17:30	0	1	0	0	1	0
17:30 - 17:45	0	0	0	0	2	0
17:45 - 18:00	0	1	0	0	2	0

Time Period	Eastbound			Westbound		
	Left	Through	Right	Left	Through	Right
16:00 - 16:15	0	0	2	0	0	0
16:15 - 16:30	0	0	0	0	0	0
16:30 - 16:45	0	0	1	0	0	0
16:45 - 17:00	0	0	0	0	0	0
17:00 - 17:15	0	0	0	0	0	0
17:15 - 17:30	0	0	1	0	0	0
17:30 - 17:45	0	0	0	0	0	0
17:45 - 18:00	0	0	0	0	0	0

North / South
Belle Terre Blvd

East / West
Whippoorwill Dr

Peak Hour
16:45 - 17:45

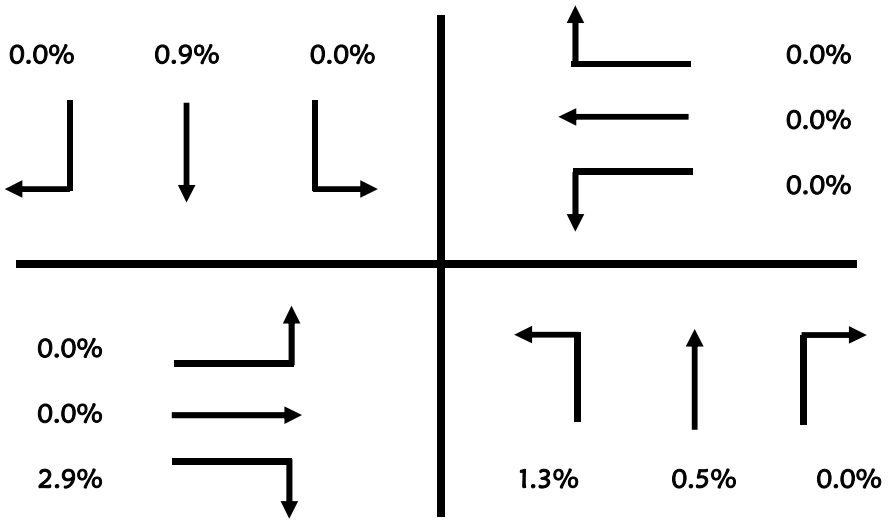

Roadway Count Summary

Vanasse Hangen Brustlin, Inc.

County	Flagler	**City**	Palm Coast
Intersection	Belle Terre Blvd	&	Whippoorwill Dr
Date	September 1, 2015		
Time Period	16:00 to 18:00		**U-Turn & RTOR**

VHB Project #: 62393

Time Period	Northbound			Southbound		
	Left	Through	Right	Left	Through	Right
16:00 - 16:15	0	0	0	0	0	0
16:15 - 16:30	0	0	0	0	0	0
16:30 - 16:45	0	0	0	0	0	0
16:45 - 17:00	0	0	0	0	0	0
17:00 - 17:15	1	0	0	0	0	0
17:15 - 17:30	0	0	0	0	0	0
17:30 - 17:45	0	0	0	0	0	0
17:45 - 18:00	0	0	0	0	0	0

Time Period	Eastbound			Westbound		
	Left	Through	Right	Left	Through	Right
16:00 - 16:15	0	0	0	0	0	0
16:15 - 16:30	0	0	0	0	0	0
16:30 - 16:45	0	0	0	0	0	0
16:45 - 17:00	0	0	0	0	0	0
17:00 - 17:15	0	0	0	0	0	0
17:15 - 17:30	0	0	0	0	0	0
17:30 - 17:45	0	0	0	0	0	0
17:45 - 18:00	0	0	0	0	0	0

North / South
Belle Terre Blvd

East / West
Whippoorwill Dr

Peak Hour
16:45 - 17:45

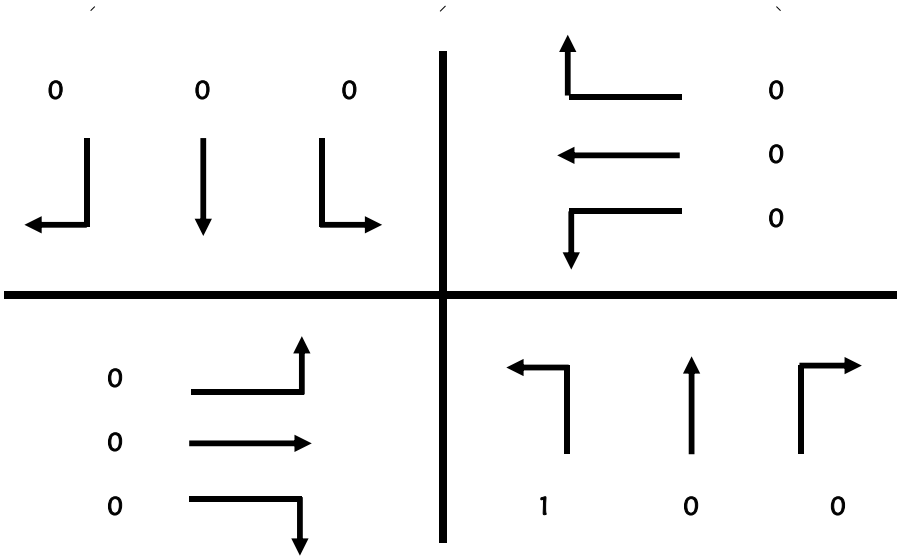

Pedestrian & Bicycle Summary

Project #: 62393 **NB/SB:** Belle Terre Blvd

Date: 9/1/2015 **EB/WB:** Whippoorwill Dr

Hour

		7:00	8:00		16:00	17:00				
		1	2	3	4	5	6	7	8	
Eastbound ▶	Bike	3	1		1	5				10
	Ped	1	0		0	0				1
Westbound ◀	Bike	0	0		0	0				0
	Ped	0	0		0	0				0

	Southbound		Northbound		
Hour	Ped ▼	Bike	Ped ▲	Bike	Hour
1 7:00	0	0	0	0	1 7:00
2 8:00	0	0	0	0	2 8:00
3					3
4 16:00	0	0	0	0	4 16:00
5 17:00	2	0	0	0	5 17:00
6					6
7					7
8					8
	2	0	0	0	

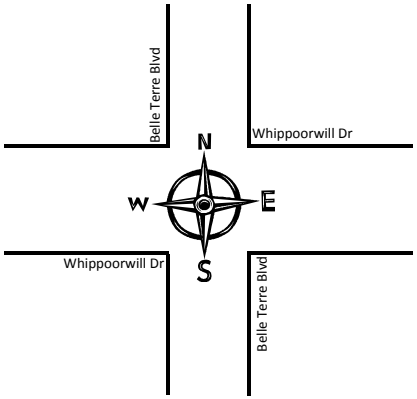

	Southbound		Northbound		
	Ped ▼	Bike	Ped ▲	Bike	Hour
1	0	0	0	0	1 7:00
2	0	0	0	0	2 8:00
3					3
4	0	0	0	0	4 16:00
5	0	0	0	0	5 17:00
6					6
7					7
8					8
	0	0	0	0	

		7:00	8:00		16:00	17:00				
		1	2	3	4	5	6	7	8	
Eastbound ▶	Bike	4	1		1	2				8
	Ped	0	0		0	0				0
Westbound ◀	Bike	0	0		0	0				0
	Ped	0	0		0	0				0

Hour

Roadway Count Summary

Vanasse Hangen Brustlin, Inc.

County	Flagler	**City**	Palm Coast
Intersection	Belle Terre Blvd	&	Pitchard Dr
Date	September 1, 2015		**All Vehicles**
Time Period	7:00 to 9:00		

VHB Project #: 62393

Time Period	Northbound Left	Northbound Through	Northbound Right	Southbound Left	Southbound Through	Southbound Right
7:00 - 7:15	0	196	1	7	115	0
7:15 - 7:30	0	132	2	18	183	0
7:30 - 7:45	0	150	5	6	129	0
7:45 - 8:00	0	222	9	8	137	0
8:00 - 8:15	0	185	7	11	121	0
8:15 - 8:30	0	245	5	10	139	0
8:30 - 8:45	0	231	8	15	194	0
8:45 - 9:00	0	219	4	13	172	0
	0	1,580	41	88	1,190	0

Time Period	Eastbound Left	Eastbound Through	Eastbound Right	Westbound Left	Westbound Through	Westbound Right
7:00 - 7:15	0	0	0	5	0	35
7:15 - 7:30	0	0	0	11	0	22
7:30 - 7:45	0	0	0	13	0	26
7:45 - 8:00	0	0	0	15	0	23
8:00 - 8:15	0	0	0	13	0	30
8:15 - 8:30	0	0	0	9	0	39
8:30 - 8:45	0	0	0	11	0	23
8:45 - 9:00	0	0	0	8	0	32
	0	0	0	85	0	230

North / South
Belle Terre Blvd

East / West
Pitchard Dr

Peak Hour
8:00 - 9:00

Peak Hour Factor
0.91

Total Pk Hr Voume
1,744

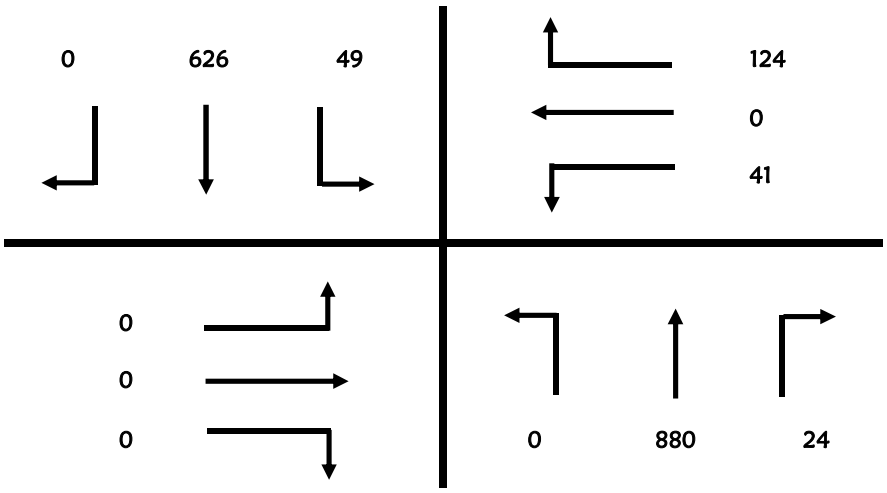

Roadway Count Summary

Vanasse Hangen Brustlin, Inc.

County	Flagler	**City**	Palm Coast
Intersection	Belle Terre Blvd	&	Pitchard Dr
Date	September 1, 2015		
Time Period	7:00 to 9:00		**Trucks**

VHB Project #: 62393

Time Period	Northbound			Southbound		
	Left	Through	Right	Left	Through	Right
7:00 - 7:15	0	16	0	0	10	0
7:15 - 7:30	0	3	0	2	19	0
7:30 - 7:45	0	0	0	0	2	0
7:45 - 8:00	0	6	0	0	3	0
8:00 - 8:15	0	5	0	1	4	0
8:15 - 8:30	0	12	1	1	10	0
8:30 - 8:45	0	6	0	0	9	0
8:45 - 9:00	0	4	0	0	5	0

Time Period	Eastbound			Westbound		
	Left	Through	Right	Left	Through	Right
7:00 - 7:15	0	0	0	0	0	0
7:15 - 7:30	0	0	0	0	0	0
7:30 - 7:45	0	0	0	0	0	0
7:45 - 8:00	0	0	0	0	0	1
8:00 - 8:15	0	0	0	0	0	2
8:15 - 8:30	0	0	0	1	0	1
8:30 - 8:45	0	0	0	0	0	1
8:45 - 9:00	0	0	0	0	0	1

North / South
Belle Terre Blvd

East / West
Pitchard Dr

Peak Hour
8:00 - 9:00

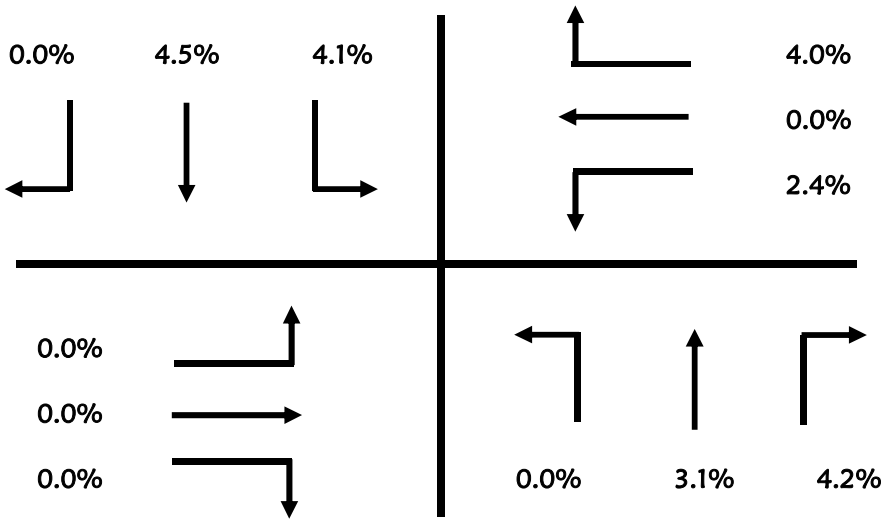

Roadway Count Summary

Vanasse Hangen Brustlin, Inc.

County	Flagler	**City**	Palm Coast
Intersection	Belle Terre Blvd	&	Pitchard Dr
Date	September 1, 2015		
Time Period	7:00 to 9:00		**U-Turn & RTOR**

VHB Project #: 62393

Time Period	Northbound			Southbound		
	Left	Through	Right	Left	Through	Right
7:00 - 7:15	0	0	0	0	0	0
7:15 - 7:30	0	0	0	0	0	0
7:30 - 7:45	0	0	0	0	0	0
7:45 - 8:00	0	0	0	0	0	0
8:00 - 8:15	0	0	0	0	0	0
8:15 - 8:30	0	0	0	0	0	0
8:30 - 8:45	0	0	0	0	0	0
8:45 - 9:00	0	0	0	0	0	0

Time Period	Eastbound			Westbound		
	Left	Through	Right	Left	Through	Right
7:00 - 7:15	0	0	0	0	0	0
7:15 - 7:30	0	0	0	0	0	0
7:30 - 7:45	0	0	0	0	0	0
7:45 - 8:00	0	0	0	0	0	0
8:00 - 8:15	0	0	0	0	0	0
8:15 - 8:30	0	0	0	0	0	0
8:30 - 8:45	0	0	0	0	0	0
8:45 - 9:00	0	0	0	0	0	0

North / South
Belle Terre Blvd

East / West
Pitchard Dr

Peak Hour
8:00 - 9:00

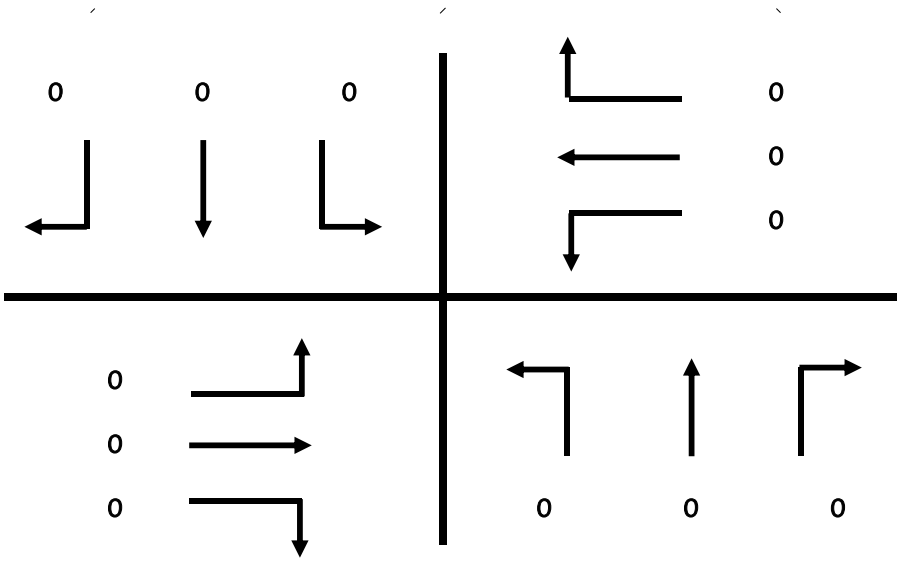

Roadway Count Summary

Vanasse Hangen Brustlin, Inc.

County	Flagler	**City**	Palm Coast
Intersection	Belle Terre Blvd	&	Pitchard Dr
Date	September 1, 2015		**All Vehicles**
Time Period	16:00 to 18:00		

VHB Project #: 62393

Time Period	Northbound Left	Northbound Through	Northbound Right	Southbound Left	Southbound Through	Southbound Right
16:00 - 16:15	0	187	12	35	246	0
16:15 - 16:30	0	213	15	24	212	0
16:30 - 16:45	0	212	10	30	213	0
16:45 - 17:00	0	225	16	26	203	0
17:00 - 17:15	0	238	13	29	206	0
17:15 - 17:30	0	191	18	35	267	0
17:30 - 17:45	0	216	10	28	237	0
17:45 - 18:00	0	202	24	35	241	0
	0	1,684	118	242	1,825	0

Time Period	Eastbound Left	Eastbound Through	Eastbound Right	Westbound Left	Westbound Through	Westbound Right
16:00 - 16:15	0	0	0	7	0	19
16:15 - 16:30	0	0	0	7	0	19
16:30 - 16:45	0	0	0	10	0	22
16:45 - 17:00	0	0	0	4	0	22
17:00 - 17:15	0	0	0	7	0	22
17:15 - 17:30	0	0	0	8	0	23
17:30 - 17:45	0	0	0	3	0	20
17:45 - 18:00	0	0	0	11	0	20
	0	0	0	57	0	167

North / South
Belle Terre Blvd

East / West
Pitchard Dr

Peak Hour
17:00 - 18:00

Peak Hour Factor
0.97

Total Pk Hr Voume
2,104

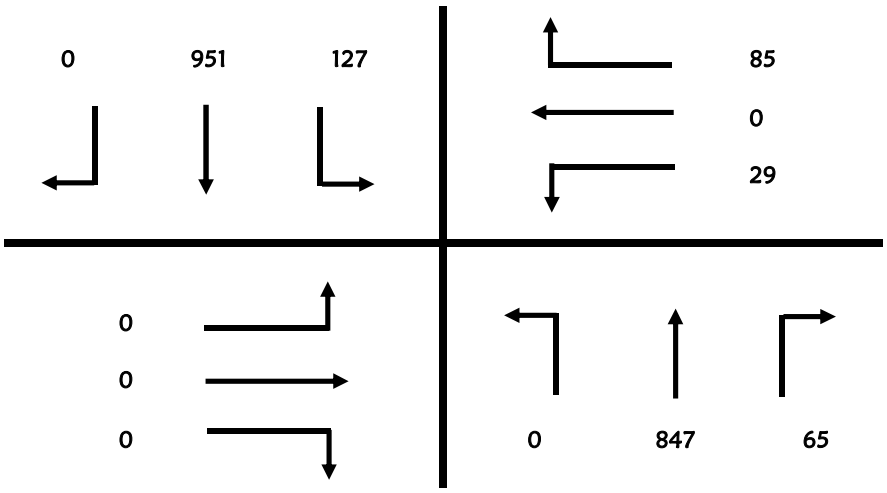

Roadway Count Summary

Vanasse Hangen Brustlin, Inc.

County	Flagler	**City**	Palm Coast
Intersection	Belle Terre Blvd	&	Pitchard Dr
Date	September 1, 2015		
Time Period	16:00 to 18:00		**Trucks**

VHB Project #: 62393

Time Period	Northbound			Southbound		
	Left	Through	Right	Left	Through	Right
16:00 - 16:15	0	3	0	0	3	0
16:15 - 16:30	0	1	1	1	4	0
16:30 - 16:45	0	0	0	0	3	0
16:45 - 17:00	0	2	0	1	2	0
17:00 - 17:15	0	0	0	0	3	0
17:15 - 17:30	0	0	0	0	1	0
17:30 - 17:45	0	1	0	0	2	0
17:45 - 18:00	0	1	0	0	2	0

Time Period	Eastbound			Westbound		
	Left	Through	Right	Left	Through	Right
16:00 - 16:15	0	0	0	0	0	1
16:15 - 16:30	0	0	0	0	0	0
16:30 - 16:45	0	0	0	1	0	0
16:45 - 17:00	0	0	0	0	0	0
17:00 - 17:15	0	0	0	0	0	1
17:15 - 17:30	0	0	0	0	0	0
17:30 - 17:45	0	0	0	0	0	0
17:45 - 18:00	0	0	0	0	0	0

North / South
Belle Terre Blvd

East / West
Pitchard Dr

Peak Hour
17:00 - 18:00

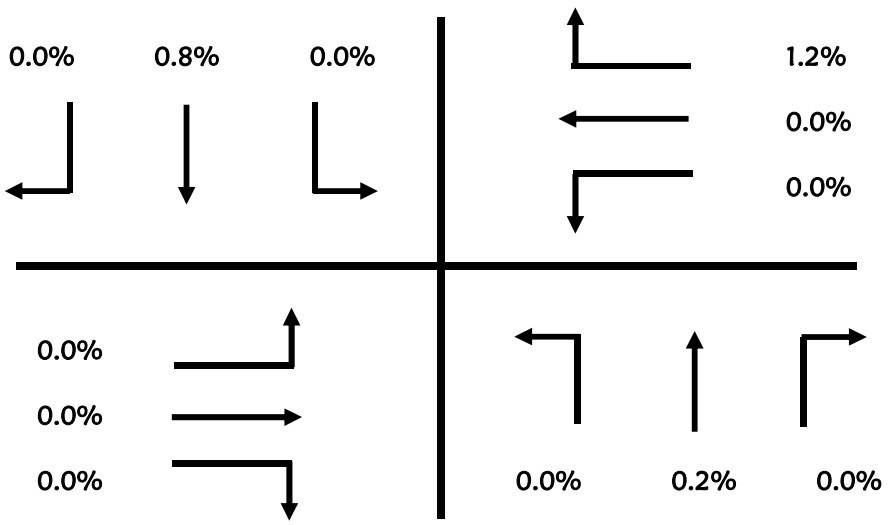

Roadway Count Summary

Vanasse Hangen Brustlin, Inc.

County	Flagler	**City**	Palm Coast
Intersection	Belle Terre Blvd	&	Pitchard Dr
Date	September 1, 2015		
Time Period	16:00 to 18:00		**U-Turn & RTOR**

VHB Project #: 62393

Time Period	Northbound			Southbound		
	Left	Through	Right	Left	Through	Right
16:00 - 16:15	0	0	0	0	0	0
16:15 - 16:30	0	0	0	0	0	0
16:30 - 16:45	0	0	0	0	0	0
16:45 - 17:00	0	0	0	0	0	0
17:00 - 17:15	0	0	0	0	0	0
17:15 - 17:30	0	0	0	0	0	0
17:30 - 17:45	0	0	0	0	0	0
17:45 - 18:00	0	0	0	0	0	0

Time Period	Eastbound			Westbound		
	Left	Through	Right	Left	Through	Right
16:00 - 16:15	0	0	0	0	0	0
16:15 - 16:30	0	0	0	0	0	0
16:30 - 16:45	0	0	0	0	0	0
16:45 - 17:00	0	0	0	0	0	0
17:00 - 17:15	0	0	0	0	0	0
17:15 - 17:30	0	0	0	0	0	0
17:30 - 17:45	0	0	0	0	0	0
17:45 - 18:00	0	0	0	0	0	0

North / South
Belle Terre Blvd

East / West
Pitchard Dr

Peak Hour
17:00 - 18:00

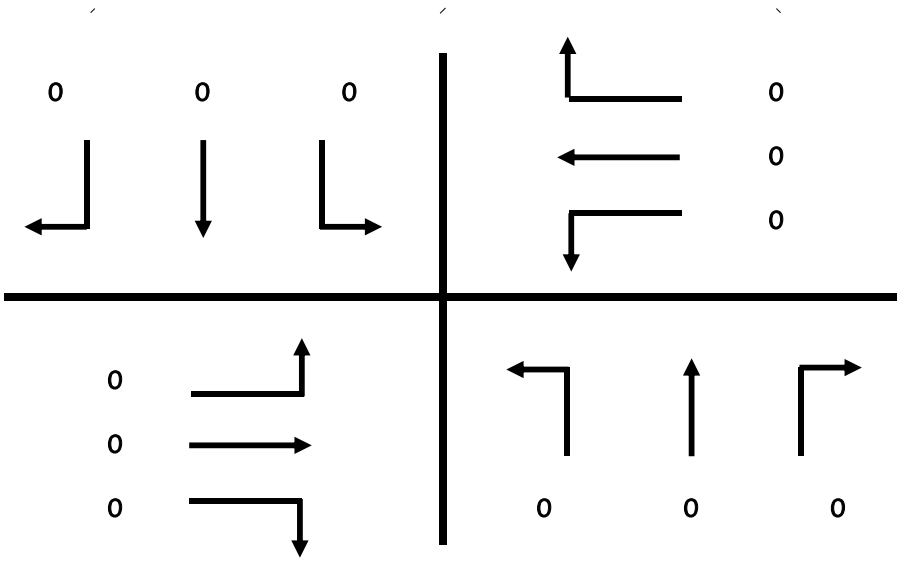

Pedestrian & Bicycle Summary

Project #: 62393 **NB/SB:** Belle Terre Blvd

Date: 9/1/2015 **EB/WB:** Pitchard Dr

Hour

		7:00	8:00		16:00	17:00				
		1	2	3	1	2	6	7	8	
Eastbound ▶	Bike	0	0		0	0				**0**
	Ped	0	0		0	0				**0**
Westbound ◀	Bike	6	7		2	3				**18**
	Ped	2	1		1	0				**4**

		Southbound		Northbound			Southbound		Northbound		
	Hour	Ped ▼	Bike	Ped ▲	Bike		Ped ▼	Bike	Ped ▲	Bike	Hour
1	7:00	0	0	0	0		0	0	0	0	7:00
2	8:00	0	0	0	0		0	2	0	0	8:00
3											
4	16:00	0	0	0	0		0	0	0	0	16:00
5	17:00	0	0	0	0		0	2	0	0	17:00
6											
7											
8											
		0	**0**	**0**	**0**		**0**	**4**	**0**	**0**	

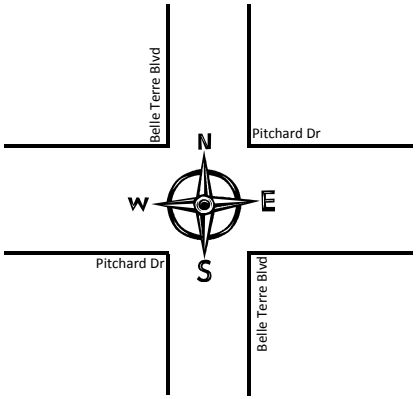

Eastbound ▶	Bike	0	0		0	0				**0**
	Ped	0	0		0	0				**0**
Westbound ◀	Bike	1	0		3	2				**6**
	Ped	0	2		0	1				**3**
		7:00	8:00		16:00	17:00				
		1	2	3	4	5	6	7	8	

Hour

Roadway Count Summary

Vanasse Hangen Brustlin, Inc.

County	Flagler	**City**	Palm Coast
Intersection	Belle Terre Blvd		& School Entrance
Date	September 1, 2015		**All Vehicles**
Time Period	7:00 to 9:00		

VHB Project #: 62393

Time Period	Northbound Left	Northbound Through	Northbound Right	Southbound Left	Southbound Through	Southbound Right
7:00 - 7:15	0	138	92	47	98	0
7:15 - 7:30	0	135	15	12	133	0
7:30 - 7:45	0	185	5	10	135	0
7:45 - 8:00	0	250	7	29	146	0
8:00 - 8:15	0	215	2	31	117	0
8:15 - 8:30	0	272	8	44	161	0
8:30 - 8:45	0	255	5	41	200	0
8:45 - 9:00	0	250	3	7	173	0
	0	1,700	137	221	1,163	0

Time Period	Eastbound Left	Eastbound Through	Eastbound Right	Westbound Left	Westbound Through	Westbound Right
7:00 - 7:15	0	0	0	55	0	25
7:15 - 7:30	0	0	0	51	0	34
7:30 - 7:45	0	0	0	4	0	4
7:45 - 8:00	0	0	0	2	0	4
8:00 - 8:15	0	0	0	6	0	2
8:15 - 8:30	0	0	0	6	0	2
8:30 - 8:45	0	0	0	7	0	2
8:45 - 9:00	0	0	0	3	0	1
	0	0	0	134	0	74

North / South
Belle Terre Blvd

East / West
School Entrance

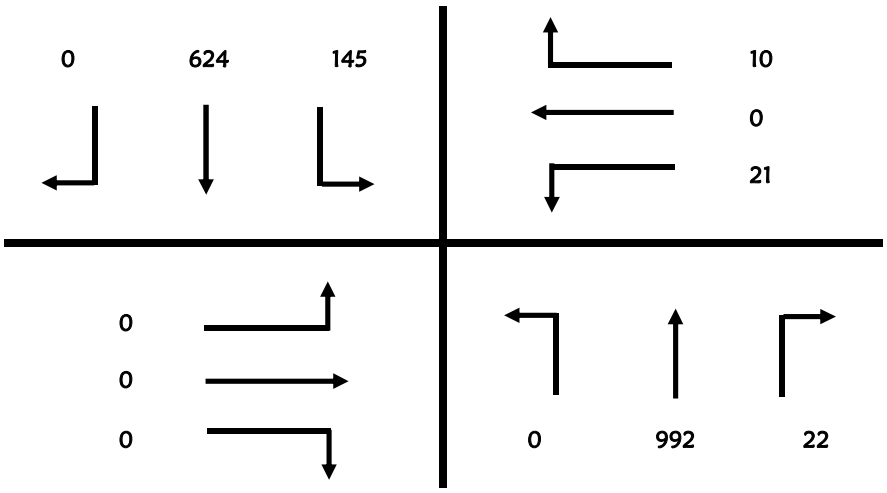

Peak Hour
7:45 - 8:45

Peak Hour Factor
0.89

Total Pk Hr Voume
1,814

Roadway Count Summary

Vanasse Hangen Brustlin, Inc.

County	Flagler	**City**	Palm Coast
Intersection	Belle Terre Blvd	&	School Entrance
Date	September 1, 2015		
Time Period	7:00 to 9:00		**Trucks**

VHB Project #: 62393

Time Period	Northbound			Southbound		
	Left	Through	Right	Left	Through	Right
7:00 - 7:15	0	11	0	0	15	0
7:15 - 7:30	0	3	0	0	12	0
7:30 - 7:45	0	0	0	0	2	0
7:45 - 8:00	0	6	0	2	4	0
8:00 - 8:15	0	5	1	0	3	0
8:15 - 8:30	0	7	3	1	6	0
8:30 - 8:45	0	6	0	1	4	0
8:45 - 9:00	0	5	0	0	4	0

Time Period	Eastbound			Westbound		
	Left	Through	Right	Left	Through	Right
7:00 - 7:15	0	0	0	4	0	0
7:15 - 7:30	0	0	0	0	0	0
7:30 - 7:45	0	0	0	0	0	0
7:45 - 8:00	0	0	0	0	0	1
8:00 - 8:15	0	0	0	2	0	0
8:15 - 8:30	0	0	0	5	0	0
8:30 - 8:45	0	0	0	4	0	0
8:45 - 9:00	0	0	0	0	0	0

North / South
Belle Terre Blvd

East / West
School Entrance

Peak Hour
7:45 - 8:45

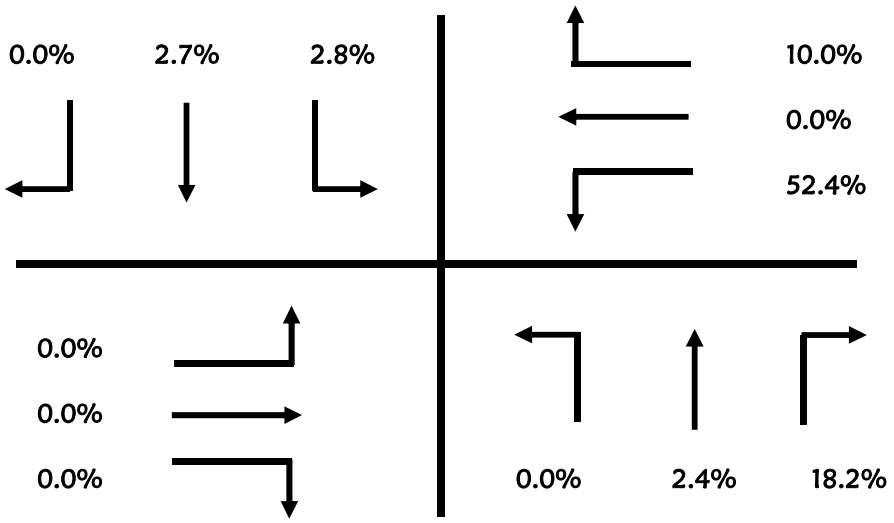

Roadway Count Summary

Vanasse Hangen Brustlin, Inc.

County	Flagler	**City**	Palm Coast
Intersection	Belle Terre Blvd	&	School Entrance
Date	September 1, 2015		
Time Period	7:00 to 9:00		**U-Turn & RTOR**

VHB Project #: 62393

Time Period	Northbound			Southbound		
	Left	Through	Right	Left	Through	Right
7:00 - 7:15	0	0	44	11	0	0
7:15 - 7:30	0	0	10	5	0	0
7:30 - 7:45	0	0	0	6	0	0
7:45 - 8:00	0	0	4	27	0	0
8:00 - 8:15	0	0	0	30	0	0
8:15 - 8:30	0	0	4	42	0	0
8:30 - 8:45	0	0	2	39	0	0
8:45 - 9:00	0	0	0	7	0	0

Time Period	Eastbound			Westbound		
	Left	Through	Right	Left	Through	Right
7:00 - 7:15	0	0	0	0	0	6
7:15 - 7:30	0	0	0	0	0	0
7:30 - 7:45	0	0	0	0	0	0
7:45 - 8:00	0	0	0	0	0	0
8:00 - 8:15	0	0	0	0	0	0
8:15 - 8:30	0	0	0	0	0	0
8:30 - 8:45	0	0	0	0	0	0
8:45 - 9:00	0	0	0	0	0	0

North / South
Belle Terre Blvd

East / West
School Entrance

Peak Hour
7:45 - 8:45

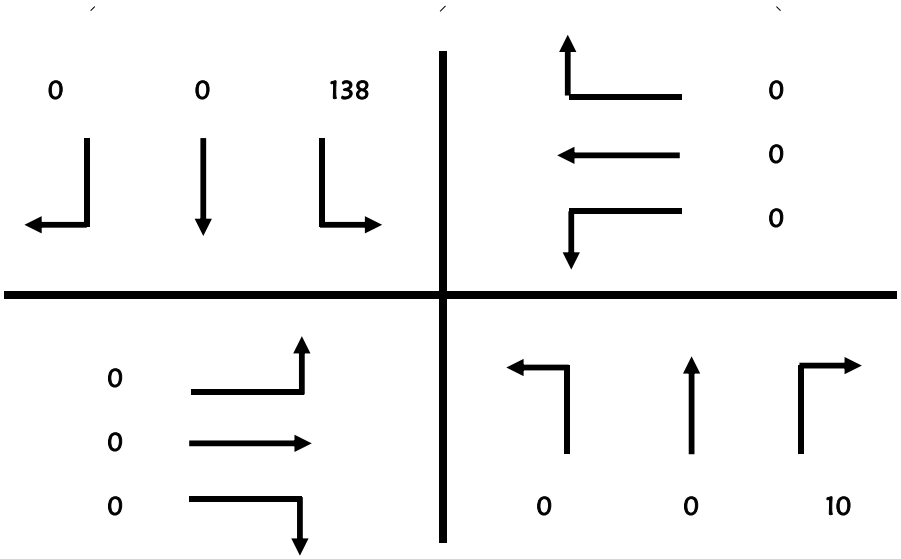

Roadway Count Summary

Vanasse Hangen Brustlin, Inc.

County	Flagler	**City**	Palm Coast
Intersection	Belle Terre Blvd		& School Entrance
Date	September 1, 2015		**All Vehicles**
Time Period	16:00 to 18:00		

VHB Project #: 62393

Time Period	Northbound Left	Northbound Through	Northbound Right	Southbound Left	Southbound Through	Southbound Right
16:00 - 16:15	0	209	3	4	294	0
16:15 - 16:30	0	236	2	4	216	0
16:30 - 16:45	0	227	4	6	235	0
16:45 - 17:00	0	246	4	2	230	0
17:00 - 17:15	0	253	4	5	260	0
17:15 - 17:30	0	203	5	6	277	0
17:30 - 17:45	0	227	14	4	279	0
17:45 - 18:00	0	211	4	3	263	0
	0	1,812	40	34	2,054	0

Time Period	Eastbound Left	Eastbound Through	Eastbound Right	Westbound Left	Westbound Through	Westbound Right
16:00 - 16:15	0	0	0	2	0	5
16:15 - 16:30	0	0	0	5	0	3
16:30 - 16:45	0	0	0	3	0	3
16:45 - 17:00	0	0	0	5	0	5
17:00 - 17:15	0	0	0	6	0	3
17:15 - 17:30	0	0	0	8	0	4
17:30 - 17:45	0	0	0	5	0	7
17:45 - 18:00	0	0	0	7	0	6
	0	0	0	41	0	36

North / South
Belle Terre Blvd

East / West
School Entrance

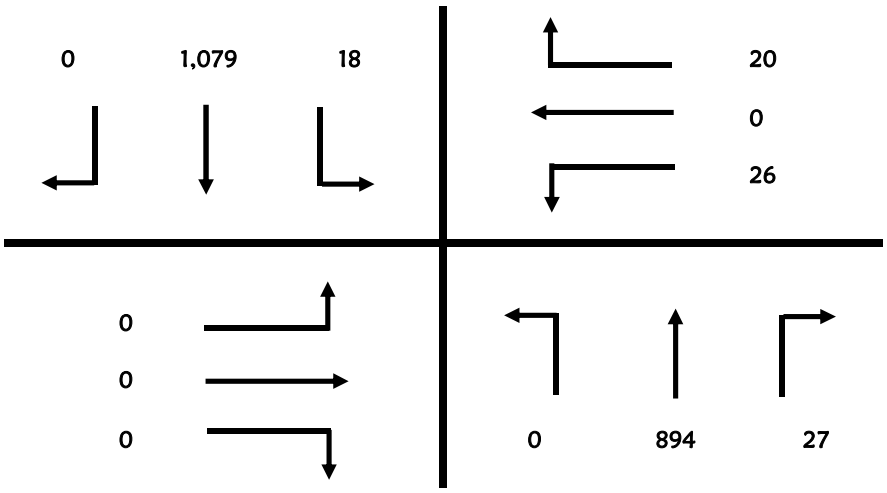

Peak Hour
17:00 - 18:00

Peak Hour Factor
0.96

Total Pk Hr Voume
2,064

Roadway Count Summary

Vanasse Hangen Brustlin, Inc.

County	Flagler	**City**	Palm Coast
Intersection	Belle Terre Blvd	&	School Entrance
Date	September 1, 2015		
Time Period	16:00 to 18:00		**Trucks**

VHB Project #: 62393

Time Period	Northbound			Southbound		
	Left	Through	Right	Left	Through	Right
16:00 - 16:15	0	5	0	0	2	0
16:15 - 16:30	0	1	0	0	5	0
16:30 - 16:45	0	0	0	0	4	0
16:45 - 17:00	0	3	0	0	2	0
17:00 - 17:15	0	4	0	0	4	0
17:15 - 17:30	0	2	0	0	1	0
17:30 - 17:45	0	0	0	0	3	0
17:45 - 18:00	0	1	0	0	1	0

Time Period	Eastbound			Westbound		
	Left	Through	Right	Left	Through	Right
16:00 - 16:15	0	0	0	0	0	0
16:15 - 16:30	0	0	0	0	0	0
16:30 - 16:45	0	0	0	0	0	0
16:45 - 17:00	0	0	0	0	0	0
17:00 - 17:15	0	0	0	0	0	0
17:15 - 17:30	0	0	0	0	0	0
17:30 - 17:45	0	0	0	0	0	0
17:45 - 18:00	0	0	0	0	0	0

North / South
Belle Terre Blvd

East / West
School Entrance

Peak Hour
17:00 - 18:00

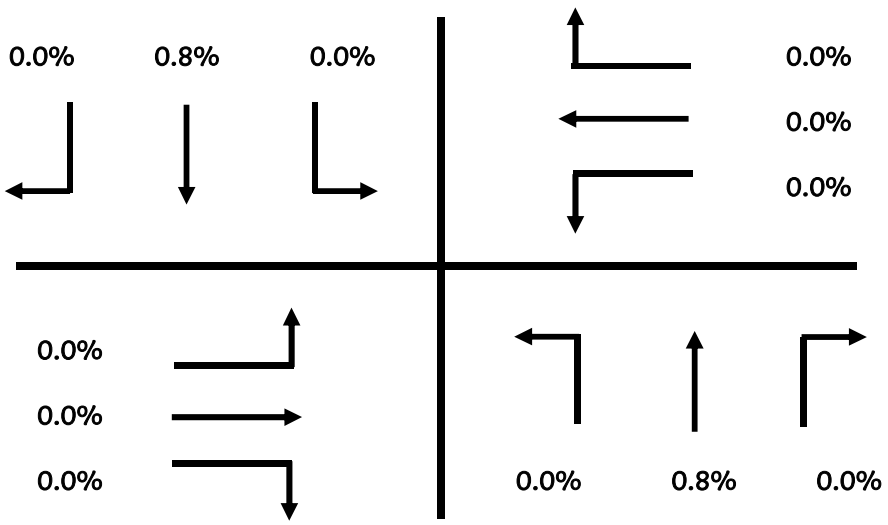

Roadway Count Summary

Vanasse Hangen Brustlin, Inc.

County	Flagler	**City**	Palm Coast
Intersection	Belle Terre Blvd	&	School Entrance
Date	September 1, 2015		
Time Period	16:00 to 18:00		**U-Turn & RTOR**

VHB Project #: 62393

Time Period	Northbound Left	Northbound Through	Northbound Right	Southbound Left	Southbound Through	Southbound Right
16:00 - 16:15	0	0	0	2	0	0
16:15 - 16:30	0	0	1	2	0	0
16:30 - 16:45	0	0	0	0	0	0
16:45 - 17:00	0	0	0	0	0	0
17:00 - 17:15	0	0	0	0	0	0
17:15 - 17:30	0	0	0	0	0	0
17:30 - 17:45	0	0	1	0	0	0
17:45 - 18:00	0	0	0	1	0	0

Time Period	Eastbound Left	Eastbound Through	Eastbound Right	Westbound Left	Westbound Through	Westbound Right
16:00 - 16:15	0	0	0	0	0	1
16:15 - 16:30	0	0	0	0	0	0
16:30 - 16:45	0	0	0	0	0	0
16:45 - 17:00	0	0	0	0	0	0
17:00 - 17:15	0	0	0	0	0	0
17:15 - 17:30	0	0	0	0	0	0
17:30 - 17:45	0	0	0	0	0	0
17:45 - 18:00	0	0	0	0	0	0

North / South
Belle Terre Blvd

East / West
School Entrance

Peak Hour
17:00 - 18:00

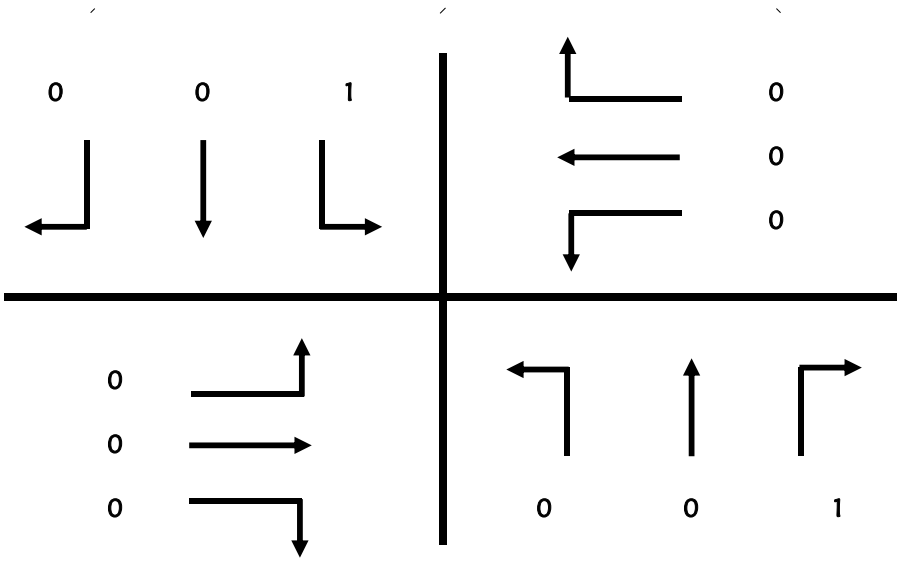

Pedestrian & Bicycle Summary

Project #: 62393 **NB/SB:** Belle Terre Blvd

Date: 9/1/2015 **EB/WB:** School Entrance

Hour

		7:00	8:00		16:00	17:00				
		1	2	3	4	5	6	7	8	
Eastbound ▶	Bike	0	0		0	0				**0**
	Ped	0	0		0	0				**0**
Westbound ◀	Bike	1	10		1	3				**15**
	Ped	1	1		0	0				**2**

	Hour	Southbound Ped ▼	Southbound Bike ▼	Northbound Ped ▲	Northbound Bike ▲
1	7:00	1	0	0	0
2	8:00	2	0	0	0
3					
4	16:00	0	0	0	0
5	17:00	0	0	0	0
6					
7					
8					
		3	**0**	**0**	**0**

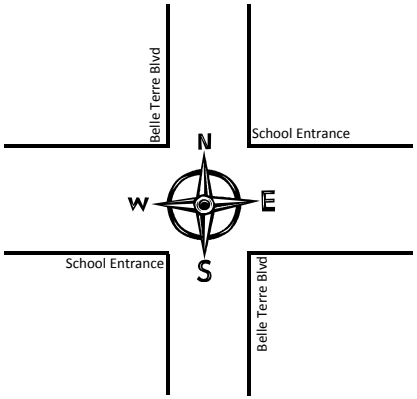

	Southbound Ped ▼	Southbound Bike ▼	Northbound Ped ▲	Northbound Bike ▲	Hour
1	21	4	0	0	7:00
2	2	0	2	0	8:00
3					
4	0	1	0	0	16:00
5	0	0	0	0	17:00
6					
7					
8					
	23	**5**	**2**	**0**	

		7:00	8:00		16:00	17:00				
		1	2	3	4	5	6	7	8	
Eastbound ▶	Bike	0	0		0	0				**0**
	Ped	0	0		0	0				**0**
Westbound ◀	Bike	0	1		3	0				**4**
	Ped	0	2		4	0				**6**

Hour

Roadway Count Summary

Vanasse Hangen Brustlin, Inc.

County	Flagler	**City**	Palm Coast
Intersection	Belle Terre Blvd	&	Parkview Dr (S)
Date	September 1, 2015		**All Vehicles**
Time Period	7:00 to 9:00		

VHB Project #: 62393

Time Period	Northbound Left	Northbound Through	Northbound Right	Southbound Left	Southbound Through	Southbound Right
7:00 - 7:15	0	139	26	6	90	0
7:15 - 7:30	0	140	14	14	97	0
7:30 - 7:45	0	151	10	4	109	0
7:45 - 8:00	0	197	13	9	123	0
8:00 - 8:15	0	151	25	14	117	0
8:15 - 8:30	1	160	15	11	130	0
8:30 - 8:45	0	196	14	12	146	0
8:45 - 9:00	0	226	18	10	127	0
	1	1,360	135	80	939	0

Time Period	Eastbound Left	Eastbound Through	Eastbound Right	Westbound Left	Westbound Through	Westbound Right
7:00 - 7:15	0	0	0	58	0	31
7:15 - 7:30	0	0	0	49	0	27
7:30 - 7:45	0	0	0	34	0	36
7:45 - 8:00	0	0	0	52	0	31
8:00 - 8:15	0	0	0	31	0	20
8:15 - 8:30	0	0	0	82	0	42
8:30 - 8:45	0	0	0	92	0	84
8:45 - 9:00	0	0	0	51	0	56
	0	0	0	449	0	327

North / South
Belle Terre Blvd

East / West
Parkview Dr (S)

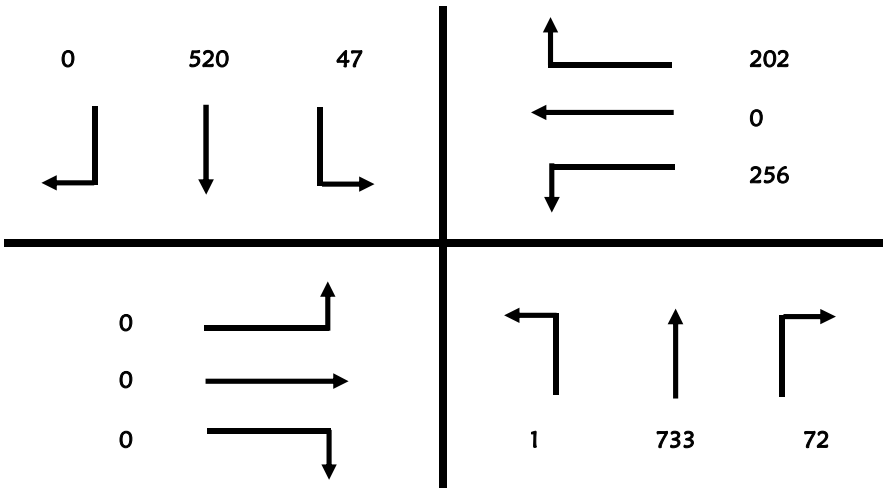

Peak Hour
8:00 - 9:00

Peak Hour Factor
0.84

Total Pk Hr Voume
1,831

Roadway Count Summary

Vanasse Hangen Brustlin, Inc.

County	Flagler	**City**	Palm Coast
Intersection	Belle Terre Blvd	&	Parkview Dr (S)
Date	September 1, 2015		
Time Period	7:00 to 9:00		**Trucks**

VHB Project #: 62393

Time Period	Northbound			Southbound		
	Left	Through	Right	Left	Through	Right
7:00 - 7:15	0	5	9	1	3	0
7:15 - 7:30	0	3	0	1	2	0
7:30 - 7:45	0	0	0	0	2	0
7:45 - 8:00	0	4	1	0	4	0
8:00 - 8:15	0	6	1	1	2	0
8:15 - 8:30	0	5	1	0	5	0
8:30 - 8:45	0	7	1	2	4	0
8:45 - 9:00	0	3	2	0	3	0

Time Period	Eastbound			Westbound		
	Left	Through	Right	Left	Through	Right
7:00 - 7:15	0	0	0	13	0	1
7:15 - 7:30	0	0	0	11	0	0
7:30 - 7:45	0	0	0	0	0	0
7:45 - 8:00	0	0	0	3	0	0
8:00 - 8:15	0	0	0	1	0	0
8:15 - 8:30	0	0	0	4	0	0
8:30 - 8:45	0	0	0	1	0	0
8:45 - 9:00	0	0	0	1	0	0

North / South
Belle Terre Blvd

East / West
Parkview Dr (S)

Peak Hour
8:00 - 9:00

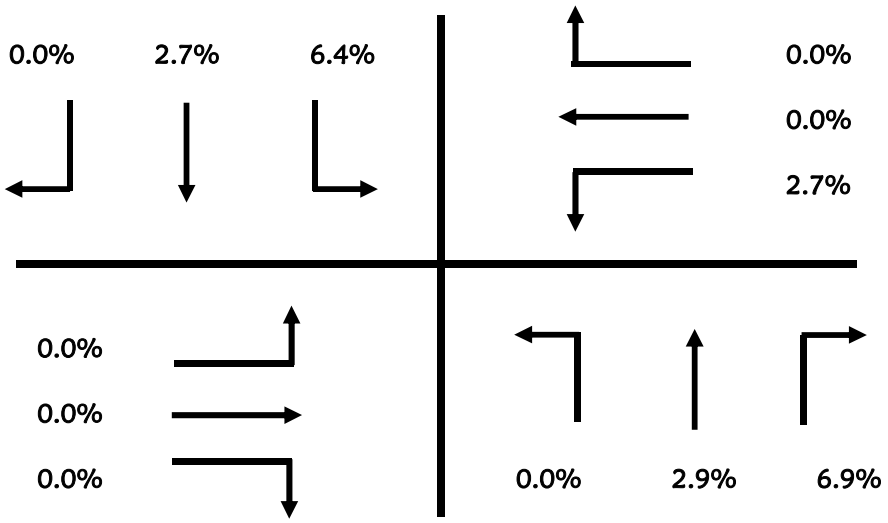

Roadway Count Summary

Vanasse Hangen Brustlin, Inc.

County	Flagler	**City**	Palm Coast
Intersection	Belle Terre Blvd	&	Parkview Dr (S)
Date	September 1, 2015		
Time Period	7:00 to 9:00		**U-Turn & RTOR**

VHB Project #: 62393

Time Period	Northbound Left	Northbound Through	Northbound Right	Southbound Left	Southbound Through	Southbound Right
7:00 - 7:15	0	0	3	0	0	0
7:15 - 7:30	0	0	0	0	0	0
7:30 - 7:45	0	0	0	0	0	0
7:45 - 8:00	0	0	0	0	0	0
8:00 - 8:15	0	0	0	0	0	0
8:15 - 8:30	1	0	0	0	0	0
8:30 - 8:45	0	0	0	0	0	0
8:45 - 9:00	0	0	0	0	0	0

Time Period	Eastbound Left	Eastbound Through	Eastbound Right	Westbound Left	Westbound Through	Westbound Right
7:00 - 7:15	0	0	0	0	0	11
7:15 - 7:30	0	0	0	0	0	6
7:30 - 7:45	0	0	0	0	0	5
7:45 - 8:00	0	0	0	0	0	12
8:00 - 8:15	0	0	0	0	0	10
8:15 - 8:30	0	0	0	0	0	13
8:30 - 8:45	0	0	0	0	0	27
8:45 - 9:00	0	0	0	0	0	7

North / South
Belle Terre Blvd

East / West
Parkview Dr (S)

Peak Hour
8:00 - 9:00

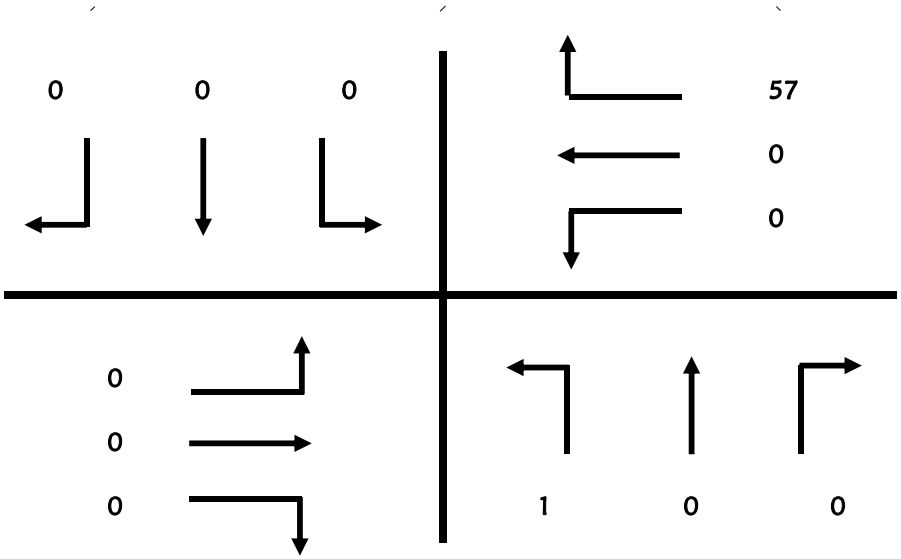

Roadway Count Summary

Vanasse Hangen Brustlin, Inc.

County	Flagler	**City**	Palm Coast
Intersection	Belle Terre Blvd	&	Parkview Dr (S)
Date	September 1, 2015		**All Vehicles**
Time Period	16:00 to 18:00		

VHB Project #: 62393

Time Period	Northbound Left	Northbound Through	Northbound Right	Southbound Left	Southbound Through	Southbound Right
16:00 - 16:15	0	175	29	23	252	0
16:15 - 16:30	0	199	35	16	198	0
16:30 - 16:45	0	198	26	24	215	0
16:45 - 17:00	0	215	32	35	203	0
17:00 - 17:15	0	220	34	27	245	0
17:15 - 17:30	0	174	36	41	255	0
17:30 - 17:45	0	185	38	28	240	0
17:45 - 18:00	0	184	41	20	241	0
	0	1,550	271	214	1,849	0

Time Period	Eastbound Left	Eastbound Through	Eastbound Right	Westbound Left	Westbound Through	Westbound Right
16:00 - 16:15	0	0	0	33	0	14
16:15 - 16:30	0	0	0	25	0	20
16:30 - 16:45	0	0	0	21	0	30
16:45 - 17:00	0	0	0	32	0	28
17:00 - 17:15	0	0	0	21	0	31
17:15 - 17:30	0	0	0	29	0	16
17:30 - 17:45	0	0	0	37	0	22
17:45 - 18:00	0	0	0	32	0	17
	0	0	0	230	0	178

North / South
Belle Terre Blvd

East / West
Parkview Dr (S)

Peak Hour
16:45 - 17:45

Peak Hour Factor
0.96

Total Pk Hr Voume
2,224

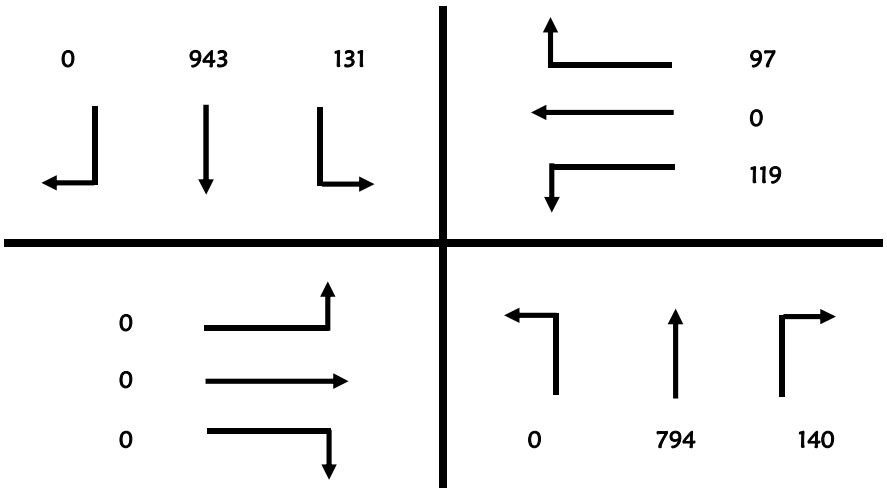

Roadway Count Summary

Vanasse Hangen Brustlin, Inc.

County	Flagler	**City**	Palm Coast
Intersection	Belle Terre Blvd	&	Parkview Dr (S)
Date	September 1, 2015		
Time Period	16:00 to 18:00		**Trucks**

VHB Project #: 62393

Time Period	Northbound			Southbound		
	Left	Through	Right	Left	Through	Right
16:00 - 16:15	0	3	0	0	0	0
16:15 - 16:30	0	1	1	0	0	0
16:30 - 16:45	0	1	0	0	2	0
16:45 - 17:00	0	2	0	0	2	0
17:00 - 17:15	0	0	1	0	5	0
17:15 - 17:30	0	0	0	0	1	0
17:30 - 17:45	0	1	0	1	3	0
17:45 - 18:00	0	0	0	0	1	0

Time Period	Eastbound			Westbound		
	Left	Through	Right	Left	Through	Right
16:00 - 16:15	0	0	0	0	0	0
16:15 - 16:30	0	0	0	0	0	1
16:30 - 16:45	0	0	0	0	0	0
16:45 - 17:00	0	0	0	0	0	0
17:00 - 17:15	0	0	0	0	0	0
17:15 - 17:30	0	0	0	1	0	0
17:30 - 17:45	0	0	0	0	0	0
17:45 - 18:00	0	0	0	0	0	0

North / South
Belle Terre Blvd

East / West
Parkview Dr (S)

Peak Hour
16:45 - 17:45

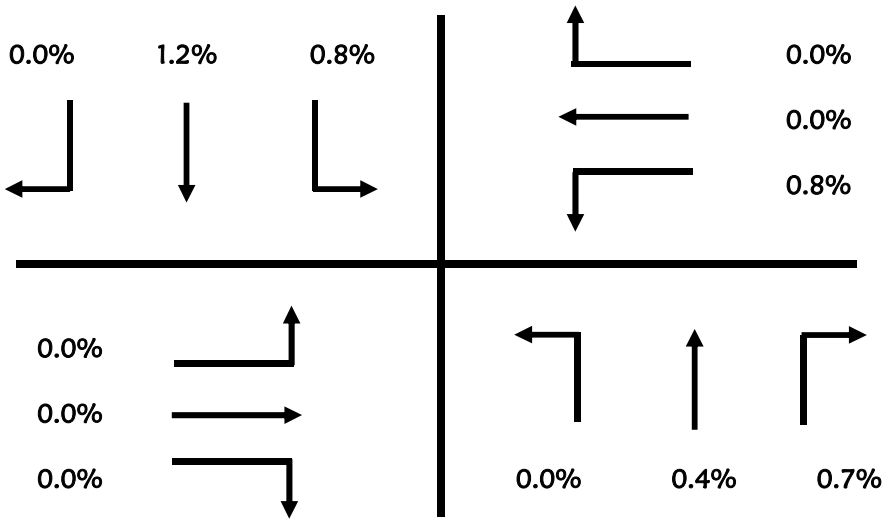

Roadway Count Summary

Vanasse Hangen Brustlin, Inc.

County	Flagler	**City**	Palm Coast
Intersection	Belle Terre Blvd	&	Parkview Dr (S)
Date	September 1, 2015		
Time Period	16:00 to 18:00		**U-Turn & RTOR**

VHB Project #: 62393

Time Period	Northbound Left	Northbound Through	Northbound Right	Southbound Left	Southbound Through	Southbound Right
16:00 - 16:15	0	0	2	0	0	0
16:15 - 16:30	0	0	1	0	0	0
16:30 - 16:45	0	0	3	1	0	0
16:45 - 17:00	0	0	7	1	0	0
17:00 - 17:15	0	0	0	1	0	0
17:15 - 17:30	0	0	1	0	0	0
17:30 - 17:45	0	0	4	0	0	0
17:45 - 18:00	0	0	1	0	0	0

Time Period	Eastbound Left	Eastbound Through	Eastbound Right	Westbound Left	Westbound Through	Westbound Right
16:00 - 16:15	0	0	0	0	0	3
16:15 - 16:30	0	0	0	0	0	6
16:30 - 16:45	0	0	0	0	0	6
16:45 - 17:00	0	0	0	0	0	6
17:00 - 17:15	0	0	0	0	0	6
17:15 - 17:30	0	0	0	0	0	5
17:30 - 17:45	0	0	0	0	0	9
17:45 - 18:00	0	0	0	0	0	2

North / South
Belle Terre Blvd

East / West
Parkview Dr (S)

Peak Hour
16:45 - 17:45

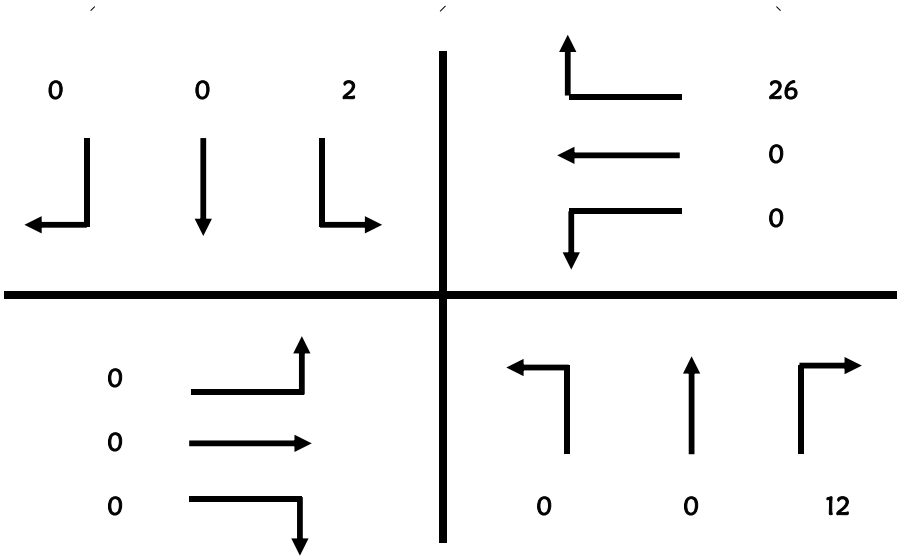

Pedestrian & Bicycle Summary

Project #: 62393 **NB/SB:** Belle Terre Blvd

Date: 9/1/2015 **EB/WB:** Parkview Dr (S)

Hour

		7:00	8:00		16:00	17:00				
		1	2	3	4	5	6	7	8	
Eastbound ▶	Bike	0	0		0	0				0
	Ped	0	0		0	0				0
Westbound ◀	Bike	0	3		0	4				7
	Ped	0	2		0	0				2

Hour	Southbound Ped ▼	Southbound Bike ▼	Northbound Ped ▲	Northbound Bike ▲
1 7:00	0	0	1	1
2 8:00	0	0	0	0
3				
4 16:00	0	0	0	0
5 17:00	0	0	0	0
6				
7				
8				
	0	0	1	1

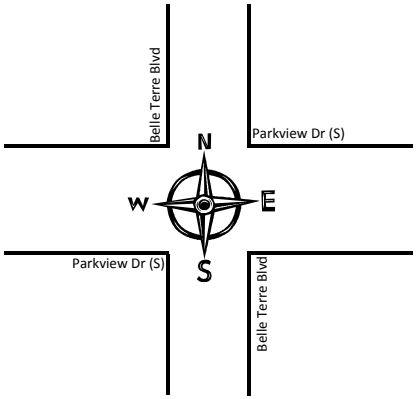

Hour	Southbound Ped ▼	Southbound Bike ▼	Northbound Ped ▲	Northbound Bike ▲	Hour
1	0	0	1	1	1 7:00
2	0	0	0	0	2 8:00
3					3
4	0	0	2	0	4 16:00
5	0	0	0	0	5 17:00
6					6
7					7
8					8
	0	0	3	1	

		7:00	8:00		16:00	17:00				
		1	2	3	4	5	6	7	8	
Eastbound ▶	Bike	0	0		0	0				0
	Ped	0	0		0	0				0
Westbound ◀	Bike	0	0		3	0				3
	Ped	0	1		0	0				1

Hour

Roadway Count Summary

Vanasse Hangen Brustlin, Inc.

County	Flagler	**City**	Palm Coast
Intersection	Belle Terre Blvd	&	Parkview Dr (N)
Date	September 1, 2015		**All Vehicles**
Time Period	7:00 to 9:00		

VHB Project #: 62393

Time Period	Northbound Left	Northbound Through	Northbound Right	Southbound Left	Southbound Through	Southbound Right
7:00 - 7:15	0	158	4	9	85	0
7:15 - 7:30	0	175	2	8	111	0
7:30 - 7:45	0	191	4	25	103	0
7:45 - 8:00	0	214	2	19	131	0
8:00 - 8:15	0	171	3	16	104	0
8:15 - 8:30	0	209	1	18	132	0
8:30 - 8:45	0	280	4	16	138	0
8:45 - 9:00	0	266	7	25	134	0
	0	1,664	27	136	938	0

Time Period	Eastbound Left	Eastbound Through	Eastbound Right	Westbound Left	Westbound Through	Westbound Right
7:00 - 7:15	0	0	0	8	0	32
7:15 - 7:30	0	0	0	8	0	22
7:30 - 7:45	0	0	0	7	0	36
7:45 - 8:00	0	0	0	3	0	40
8:00 - 8:15	0	0	0	4	0	31
8:15 - 8:30	0	0	0	10	0	26
8:30 - 8:45	0	0	0	8	0	31
8:45 - 9:00	0	0	0	4	0	27
	0	0	0	52	0	245

North / South
Belle Terre Blvd

East / West
Parkview Dr (N)

Peak Hour
8:00 - 9:00

Peak Hour Factor
0.87

Total Pk Hr Voume
1,665

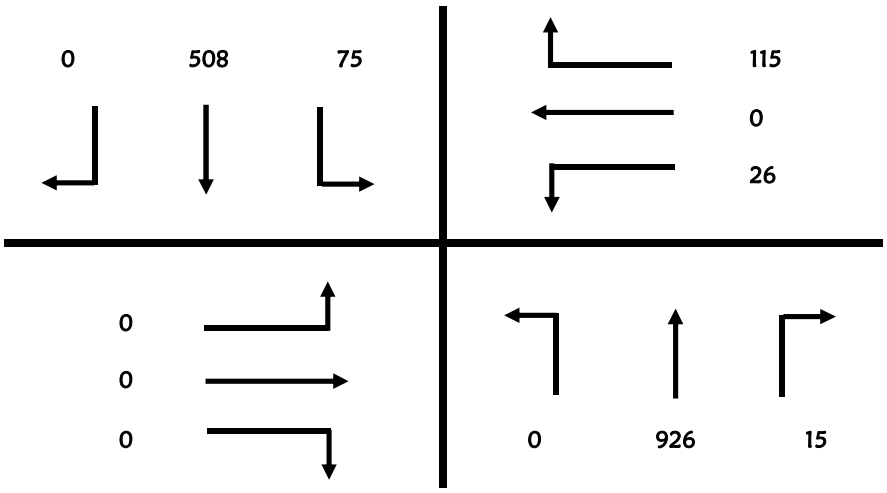

Roadway Count Summary

Vanasse Hangen Brustlin, Inc.

County	Flagler	**City**	Palm Coast
Intersection	Belle Terre Blvd	&	Parkview Dr (N)
Date	September 1, 2015		
Time Period	7:00 to 9:00		**Trucks**

VHB Project #: 62393

Time Period	Northbound			Southbound		
	Left	Through	Right	Left	Through	Right
7:00 - 7:15	0	4	1	1	3	0
7:15 - 7:30	0	3	0	0	3	0
7:30 - 7:45	0	0	0	1	3	0
7:45 - 8:00	0	6	0	0	4	0
8:00 - 8:15	0	6	0	3	2	0
8:15 - 8:30	0	5	0	1	4	0
8:30 - 8:45	0	7	0	0	4	0
8:45 - 9:00	0	3	0	0	4	0

Time Period	Eastbound			Westbound		
	Left	Through	Right	Left	Through	Right
7:00 - 7:15	0	0	0	0	0	0
7:15 - 7:30	0	0	0	0	0	0
7:30 - 7:45	0	0	0	0	0	1
7:45 - 8:00	0	0	0	0	0	0
8:00 - 8:15	0	0	0	0	0	1
8:15 - 8:30	0	0	0	0	0	0
8:30 - 8:45	0	0	0	0	0	0
8:45 - 9:00	0	0	0	0	0	0

North / South
Belle Terre Blvd

East / West
Parkview Dr (N)

Peak Hour
8:00 - 9:00

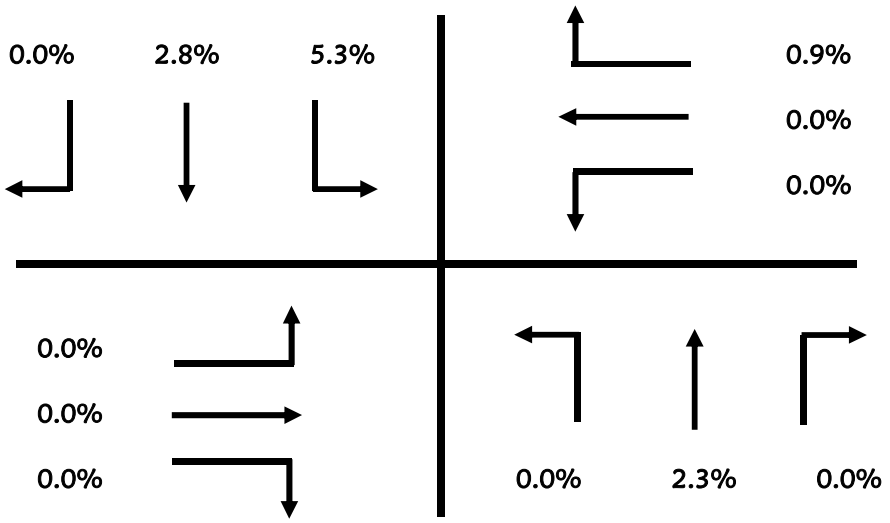

Roadway Count Summary

Vanasse Hangen Brustlin, Inc.

County	Flagler	**City**	Palm Coast
Intersection	Belle Terre Blvd	&	Parkview Dr (N)
Date	September 1, 2015		
Time Period	7:00 to 9:00		**U-Turn & RTOR**

VHB Project #: 62393

Time Period	Northbound			Southbound		
	Left	Through	Right	Left	Through	Right
7:00 - 7:15	0	0	0	1	0	0
7:15 - 7:30	0	0	0	1	0	0
7:30 - 7:45	0	0	0	0	0	0
7:45 - 8:00	0	0	0	1	0	0
8:00 - 8:15	0	0	0	1	0	0
8:15 - 8:30	0	0	0	0	0	0
8:30 - 8:45	0	0	0	0	0	0
8:45 - 9:00	0	0	0	0	0	0

Time Period	Eastbound			Westbound		
	Left	Through	Right	Left	Through	Right
7:00 - 7:15	0	0	0	0	0	0
7:15 - 7:30	0	0	0	0	0	0
7:30 - 7:45	0	0	0	0	0	0
7:45 - 8:00	0	0	0	0	0	0
8:00 - 8:15	0	0	0	0	0	0
8:15 - 8:30	0	0	0	0	0	0
8:30 - 8:45	0	0	0	0	0	0
8:45 - 9:00	0	0	0	0	0	0

North / South
Belle Terre Blvd

East / West
Parkview Dr (N)

Peak Hour
8:00 - 9:00

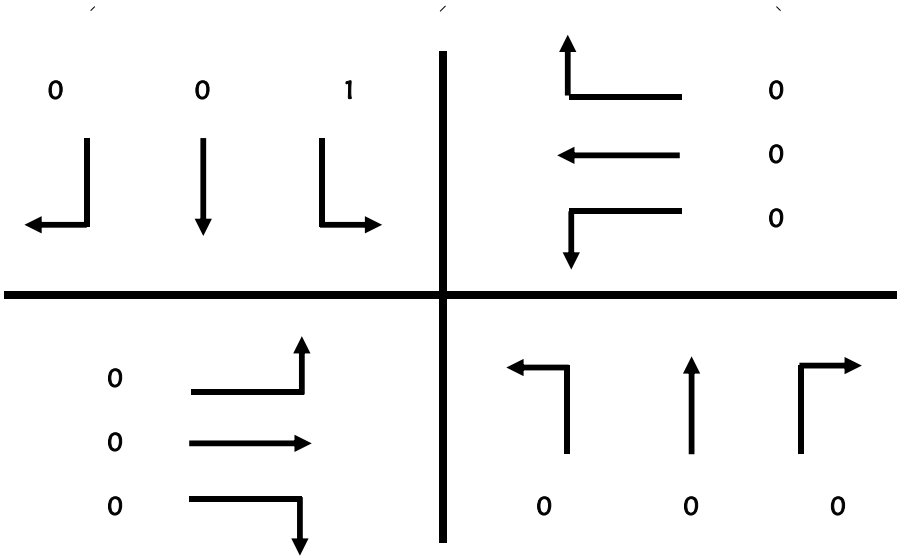

Roadway Count Summary

Vanasse Hangen Brustlin, Inc.

County	Flagler	**City**	Palm Coast
Intersection	Belle Terre Blvd	&	Parkview Dr (N)
Date	September 1, 2015		**All Vehicles**
Time Period	16:00 to 18:00		

VHB Project #: 62393

Time Period	Northbound Left	Northbound Through	Northbound Right	Southbound Left	Southbound Through	Southbound Right
16:00 - 16:15	0	186	2	35	257	0
16:15 - 16:30	0	212	3	33	199	0
16:30 - 16:45	0	230	7	39	247	0
16:45 - 17:00	0	225	5	33	223	0
17:00 - 17:15	0	255	8	40	270	0
17:15 - 17:30	0	178	10	49	282	0
17:30 - 17:45	0	202	8	45	249	0
17:45 - 18:00	0	197	4	50	225	0
	0	1,685	47	324	1,952	0

Time Period	Eastbound Left	Eastbound Through	Eastbound Right	Westbound Left	Westbound Through	Westbound Right
16:00 - 16:15	0	0	0	6	0	32
16:15 - 16:30	0	0	0	0	0	22
16:30 - 16:45	0	0	0	7	0	21
16:45 - 17:00	0	0	0	1	0	27
17:00 - 17:15	0	0	0	5	0	19
17:15 - 17:30	0	0	0	8	0	33
17:30 - 17:45	0	0	0	4	0	39
17:45 - 18:00	0	0	0	3	0	38
	0	0	0	34	0	231

North / South
Belle Terre Blvd

East / West
Parkview Dr (N)

Peak Hour
16:30 - 17:30

Peak Hour Factor
0.93

Total Pk Hr Voume
2,222

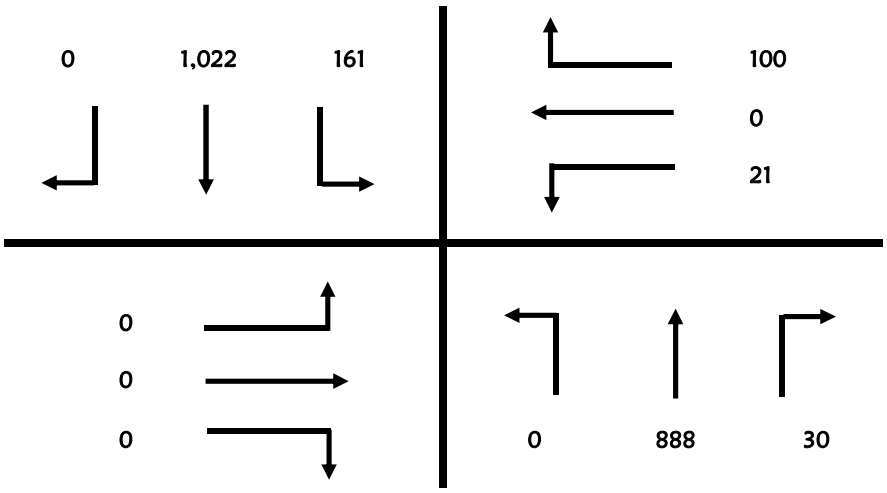

Roadway Count Summary

Vanasse Hangen Brustlin, Inc.

County	Flagler	**City**	Palm Coast
Intersection	Belle Terre Blvd	&	Parkview Dr (N)
Date	September 1, 2015		
Time Period	16:00 to 18:00		**Trucks**

VHB Project #: 62393

Time Period	Northbound			Southbound		
	Left	Through	Right	Left	Through	Right
16:00 - 16:15	0	3	0	1	2	0
16:15 - 16:30	0	2	0	2	3	0
16:30 - 16:45	0	0	0	0	4	0
16:45 - 17:00	0	3	0	0	2	0
17:00 - 17:15	0	0	0	0	2	0
17:15 - 17:30	0	0	0	0	1	0
17:30 - 17:45	0	1	0	0	5	0
17:45 - 18:00	0	0	0	0	2	0

Time Period	Eastbound			Westbound		
	Left	Through	Right	Left	Through	Right
16:00 - 16:15	0	0	0	0	0	0
16:15 - 16:30	0	0	0	0	0	0
16:30 - 16:45	0	0	0	1	0	0
16:45 - 17:00	0	0	0	0	0	0
17:00 - 17:15	0	0	0	0	0	0
17:15 - 17:30	0	0	0	0	0	0
17:30 - 17:45	0	0	0	0	0	0
17:45 - 18:00	0	0	0	0	0	0

North / South
Belle Terre Blvd

East / West
Parkview Dr (N)

Peak Hour
16:30 - 17:30

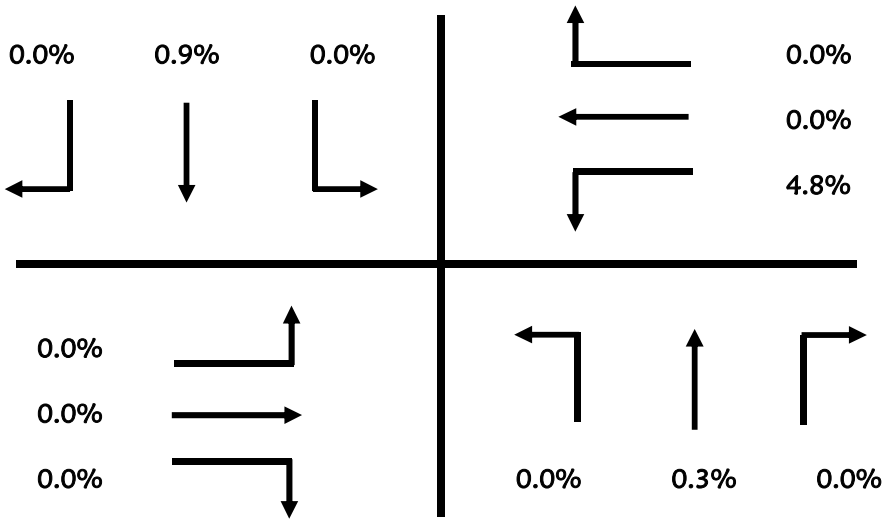

Roadway Count Summary

Vanasse Hangen Brustlin, Inc.

County	Flagler	**City**	Palm Coast
Intersection	Belle Terre Blvd	&	Parkview Dr (N)
Date	September 1, 2015		
Time Period	16:00 to 18:00		**U-Turn & RTOR**

VHB Project #: 62393

Time Period	Northbound			Southbound		
	Left	Through	Right	Left	Through	Right
16:00 - 16:15	0	0	0	2	0	0
16:15 - 16:30	0	0	0	0	0	0
16:30 - 16:45	0	0	0	0	0	0
16:45 - 17:00	0	0	0	1	0	0
17:00 - 17:15	0	0	0	1	0	0
17:15 - 17:30	0	0	0	1	0	0
17:30 - 17:45	0	0	0	1	0	0
17:45 - 18:00	0	0	0	1	0	0

Time Period	Eastbound			Westbound		
	Left	Through	Right	Left	Through	Right
16:00 - 16:15	0	0	0	0	0	0
16:15 - 16:30	0	0	0	0	0	0
16:30 - 16:45	0	0	0	0	0	0
16:45 - 17:00	0	0	0	0	0	0
17:00 - 17:15	0	0	0	0	0	0
17:15 - 17:30	0	0	0	0	0	0
17:30 - 17:45	0	0	0	0	0	0
17:45 - 18:00	0	0	0	0	0	0

North / South
Belle Terre Blvd

East / West
Parkview Dr (N)

Peak Hour
16:30 - 17:30

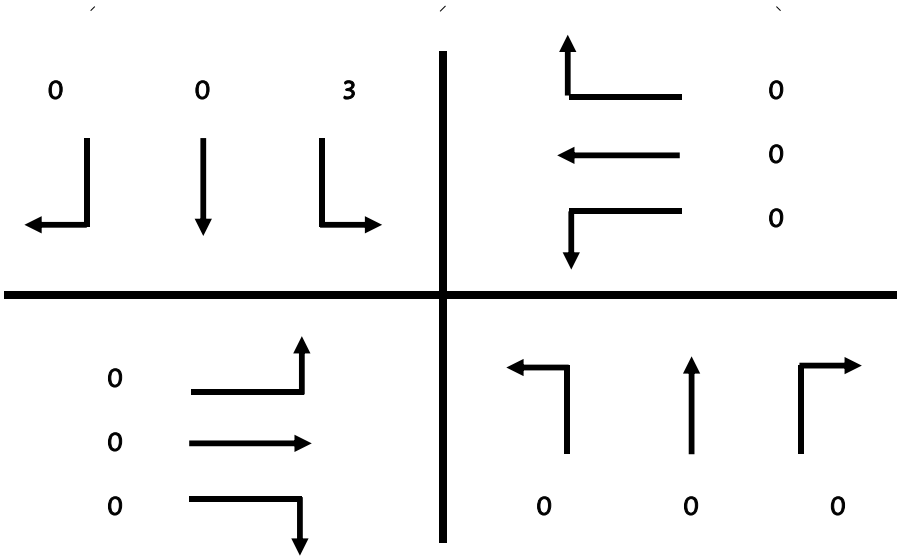

Pedestrian & Bicycle Summary

Project #: 62393 **NB/SB:** Belle Terre Blvd

Date: 9/1/2015 **EB/WB:** Parkview Dr (N)

Hour

		7:00	8:00		16:00	17:00				
		1	2	3	4	5	6	7	8	
Eastbound ▶	Bike	0	0		0	0				0
	Ped	0	0		0	0				0
Westbound ◀	Bike	1	3		0	4				8
	Ped	0	4		0	0				4

Hour	Southbound Ped ▼	Southbound Bike ▼	Northbound Ped ▲	Northbound Bike ▲
1 7:00	0	0	0	0
2 8:00	0	0	0	0
3				
4 16:00	0	0	0	0
5 17:00	0	0	0	1
6				
7				
8				
	0	0	0	1

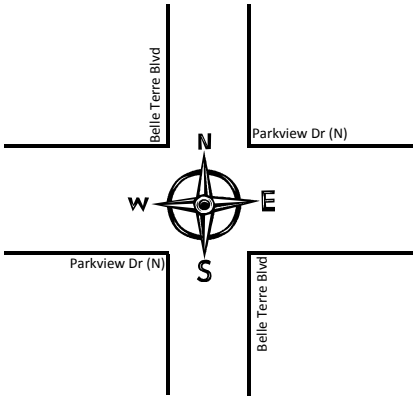

Hour	Southbound Ped ▼	Southbound Bike ▼	Northbound Ped ▲	Northbound Bike ▲	Hour
1	0	0	0	0	1 7:00
2	0	0	0	0	2 8:00
3					3
4	2	0	0	0	4 16:00
5	0	0	0	0	5 17:00
6					6
7					7
8					8
	2	0	0	0	

		7:00	8:00		16:00	17:00				
		1	2	3	4	5	6	7	8	
Eastbound ▶	Bike	0	0		0	0				0
	Ped	0	0		0	0				0
Westbound ◀	Bike	0	1		1	1				3
	Ped	0	1		0	0				1

Hour

Roadway Count Summary

Vanasse Hangen Brustlin, Inc.

County	Flagler	**City**	Palm Coast
Intersection	Belle Terre Blvd	&	Pine Lakes Pkwy
Date	September 1, 2015		**All Vehicles**
Time Period	7:00 to 9:00		

VHB Project #: 62393

Time Period	Northbound Left	Northbound Through	Northbound Right	Southbound Left	Southbound Through	Southbound Right
7:00 - 7:15	17	173	0	0	74	20
7:15 - 7:30	17	171	0	0	105	16
7:30 - 7:45	6	201	0	0	106	48
7:45 - 8:00	14	266	0	0	130	43
8:00 - 8:15	10	166	0	0	105	33
8:15 - 8:30	15	217	0	0	124	45
8:30 - 8:45	17	258	0	0	134	50
8:45 - 9:00	34	273	0	0	137	34
	130	1,725	0	0	915	289

Time Period	Eastbound Left	Eastbound Through	Eastbound Right	Westbound Left	Westbound Through	Westbound Right
7:00 - 7:15	62	0	21	0	0	0
7:15 - 7:30	90	0	12	0	0	0
7:30 - 7:45	106	0	21	0	0	0
7:45 - 8:00	126	0	24	0	0	0
8:00 - 8:15	99	0	17	0	0	0
8:15 - 8:30	90	0	40	0	0	0
8:30 - 8:45	100	0	20	0	0	0
8:45 - 9:00	112	0	20	0	0	0
	785	0	175	0	0	0

North / South
Belle Terre Blvd

East / West
Pine Lakes Pkwy

Peak Hour
8:00 - 9:00

Peak Hour Factor
0.88

Total Pk Hr Voume
2,150

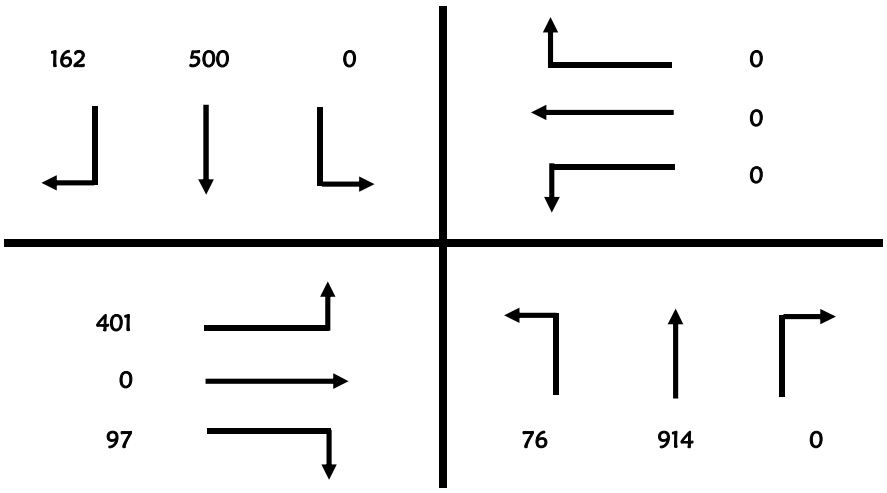

Roadway Count Summary

Vanasse Hangen Brustlin, Inc.

County	Flagler	**City**	Palm Coast
Intersection	Belle Terre Blvd	&	Pine Lakes Pkwy
Date	September 1, 2015		
Time Period	7:00 to 9:00		**Trucks**

VHB Project #: 62393

Time Period	Northbound			Southbound		
	Left	Through	Right	Left	Through	Right
7:00 - 7:15	3	1	0	0	4	0
7:15 - 7:30	1	3	0	0	4	0
7:30 - 7:45	0	1	0	0	3	2
7:45 - 8:00	0	3	0	0	4	1
8:00 - 8:15	3	5	0	0	4	1
8:15 - 8:30	2	5	0	0	3	2
8:30 - 8:45	0	5	0	0	5	0
8:45 - 9:00	1	2	0	0	3	0

Time Period	Eastbound			Westbound		
	Left	Through	Right	Left	Through	Right
7:00 - 7:15	0	0	0	0	0	0
7:15 - 7:30	0	0	0	0	0	0
7:30 - 7:45	0	0	0	0	0	0
7:45 - 8:00	0	0	0	0	0	0
8:00 - 8:15	0	0	1	0	0	0
8:15 - 8:30	1	0	1	0	0	0
8:30 - 8:45	0	0	0	0	0	0
8:45 - 9:00	2	0	1	0	0	0

North / South
Belle Terre Blvd

East / West
Pine Lakes Pkwy

Peak Hour
8:00 - 9:00

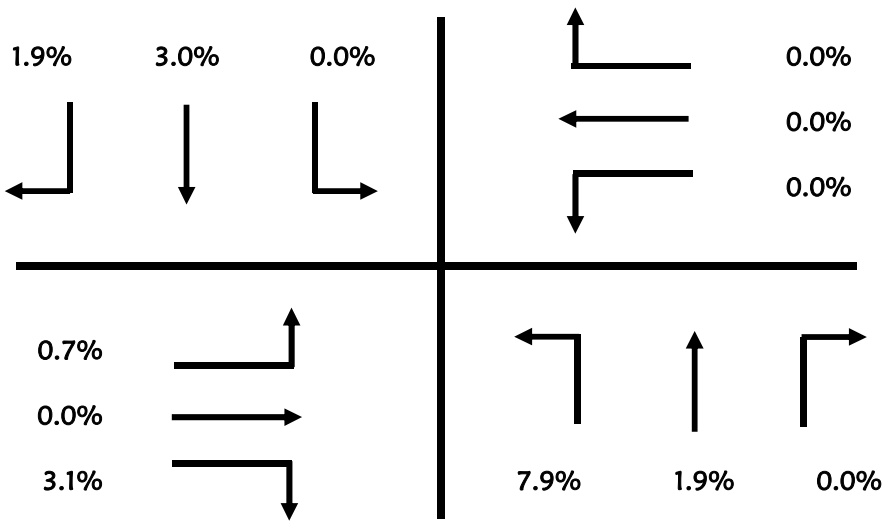

Roadway Count Summary

Vanasse Hangen Brustlin, Inc.

County	Flagler	**City**	Palm Coast
Intersection	Belle Terre Blvd	&	Pine Lakes Pkwy
Date	September 1, 2015		
Time Period	7:00 to 9:00		**U-Turn & RTOR**

VHB Project #: 62393

Time Period	Northbound			Southbound		
	Left	Through	Right	Left	Through	Right
7:00 - 7:15	0	0	0	0	0	14
7:15 - 7:30	0	0	0	0	0	6
7:30 - 7:45	0	0	0	0	0	12
7:45 - 8:00	0	0	0	0	0	21
8:00 - 8:15	0	0	0	0	0	13
8:15 - 8:30	0	0	0	0	0	14
8:30 - 8:45	2	0	0	0	0	17
8:45 - 9:00	0	0	0	0	0	9

Time Period	Eastbound			Westbound		
	Left	Through	Right	Left	Through	Right
7:00 - 7:15	0	0	15	0	0	0
7:15 - 7:30	0	0	9	0	0	0
7:30 - 7:45	0	0	12	0	0	0
7:45 - 8:00	0	0	15	0	0	0
8:00 - 8:15	0	0	11	0	0	0
8:15 - 8:30	0	0	20	0	0	0
8:30 - 8:45	0	0	13	0	0	0
8:45 - 9:00	0	0	11	0	0	0

North / South
Belle Terre Blvd

East / West
Pine Lakes Pkwy

Peak Hour
8:00 - 9:00

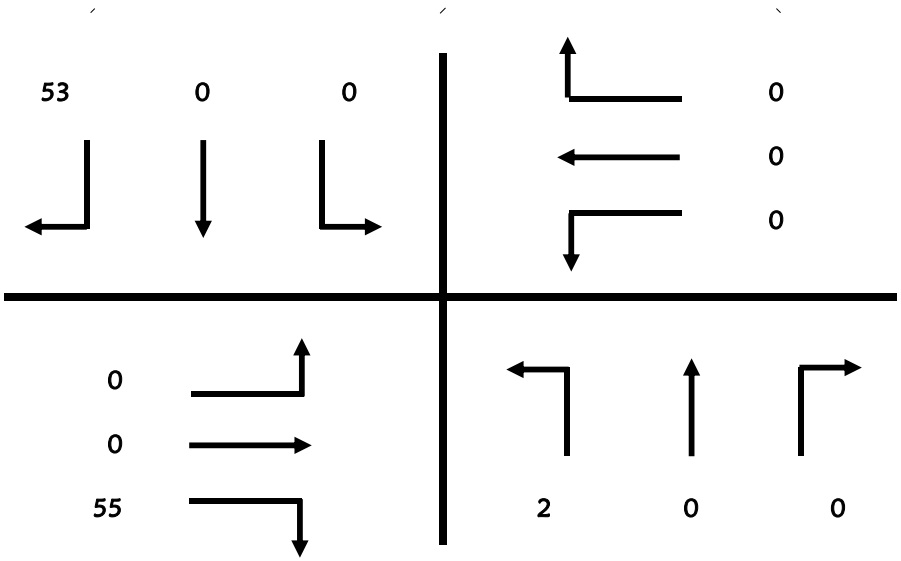

Roadway Count Summary

Vanasse Hangen Brustlin, Inc.

County	Flagler	**City**	Palm Coast
Intersection	Belle Terre Blvd	&	Pine Lakes Pkwy
Date	September 1, 2015		**All Vehicles**
Time Period	16:00 to 18:00		

VHB Project #: 62393

Time Period	Northbound Left	Northbound Through	Northbound Right	Southbound Left	Southbound Through	Southbound Right
16:00 - 16:15	22	186	0	0	263	126
16:15 - 16:30	24	210	0	0	231	95
16:30 - 16:45	17	238	0	0	252	89
16:45 - 17:00	23	222	0	0	246	102
17:00 - 17:15	29	233	0	0	292	119
17:15 - 17:30	18	200	0	1	319	111
17:30 - 17:45	26	214	0	0	257	127
17:45 - 18:00	17	218	0	0	287	107
	176	1,721	0	1	2,147	876

Time Period	Eastbound Left	Eastbound Through	Eastbound Right	Westbound Left	Westbound Through	Westbound Right
16:00 - 16:15	82	0	23	0	0	0
16:15 - 16:30	50	0	16	0	0	0
16:30 - 16:45	81	0	22	0	0	0
16:45 - 17:00	76	0	27	0	0	0
17:00 - 17:15	72	0	23	0	0	0
17:15 - 17:30	91	0	17	0	0	0
17:30 - 17:45	98	0	23	0	0	0
17:45 - 18:00	75	0	19	0	0	0
	625	0	170	0	0	0

North / South
Belle Terre Blvd

East / West
Pine Lakes Pkwy

Peak Hour
17:00 - 18:00

Peak Hour Factor
0.97

Total Pk Hr Voume
2,993

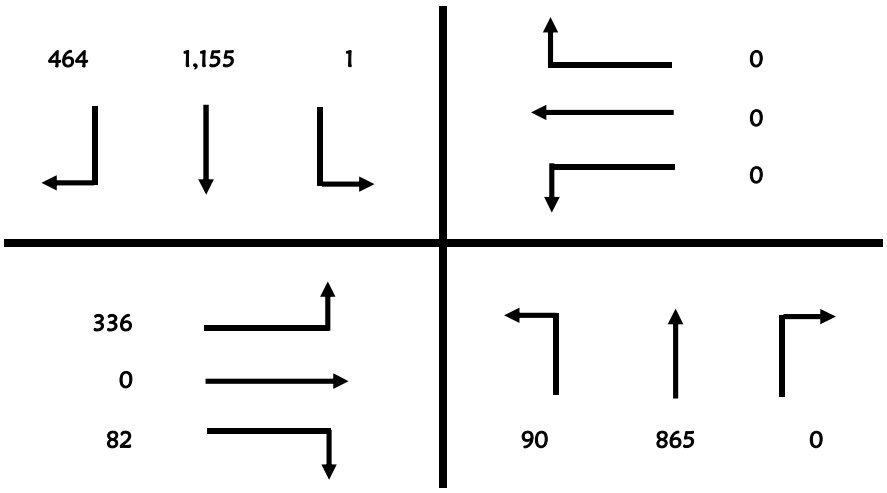

Roadway Count Summary

Vanasse Hangen Brustlin, Inc.

County	Flagler	**City**	Palm Coast
Intersection	Belle Terre Blvd	&	Pine Lakes Pkwy
Date	September 1, 2015		
Time Period	16:00 to 18:00		**Trucks**

VHB Project #: 62393

Time Period	Northbound			Southbound		
	Left	Through	Right	Left	Through	Right
16:00 - 16:15	0	3	0	0	2	0
16:15 - 16:30	1	1	0	0	4	1
16:30 - 16:45	0	0	0	0	4	0
16:45 - 17:00	0	2	0	0	2	0
17:00 - 17:15	0	1	0	0	2	0
17:15 - 17:30	0	0	0	0	0	2
17:30 - 17:45	0	1	0	0	3	0
17:45 - 18:00	0	0	0	0	1	0

Time Period	Eastbound			Westbound		
	Left	Through	Right	Left	Through	Right
16:00 - 16:15	0	0	1	0	0	0
16:15 - 16:30	0	0	0	0	0	0
16:30 - 16:45	1	0	0	0	0	0
16:45 - 17:00	0	0	0	0	0	0
17:00 - 17:15	0	0	1	0	0	0
17:15 - 17:30	1	0	0	0	0	0
17:30 - 17:45	0	0	1	0	0	0
17:45 - 18:00	0	0	0	0	0	0

North / South
Belle Terre Blvd

East / West
Pine Lakes Pkwy

Peak Hour
17:00 - 18:00

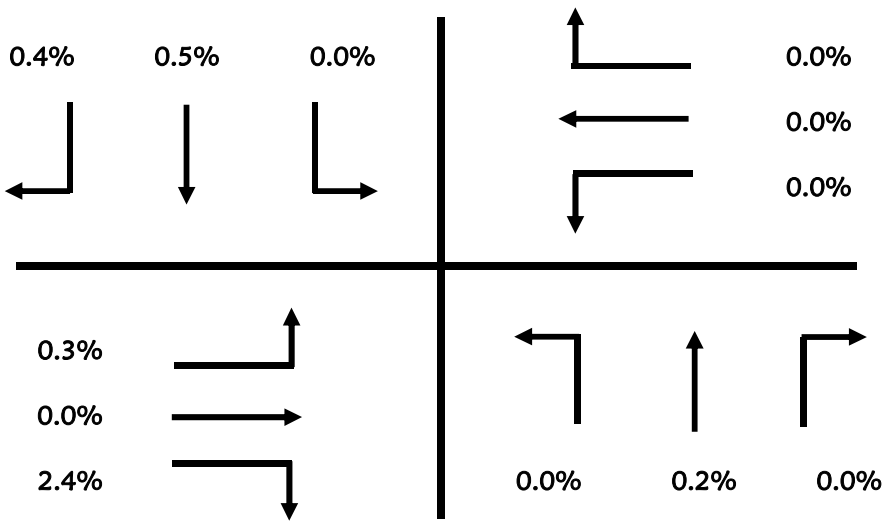

Roadway Count Summary

Vanasse Hangen Brustlin, Inc.

County	Flagler	**City**	Palm Coast
Intersection	Belle Terre Blvd	&	Pine Lakes Pkwy
Date	September 1, 2015		
Time Period	16:00 to 18:00		**U-Turn & RTOR**

VHB Project #: 62393

Time Period	Northbound			Southbound		
	Left	Through	Right	Left	Through	Right
16:00 - 16:15	0	0	0	0	0	32
16:15 - 16:30	0	0	0	0	0	20
16:30 - 16:45	1	0	0	0	0	30
16:45 - 17:00	0	0	0	0	0	30
17:00 - 17:15	0	0	0	0	0	37
17:15 - 17:30	0	0	0	1	0	42
17:30 - 17:45	2	0	0	0	0	45
17:45 - 18:00	0	0	0	0	0	38

Time Period	Eastbound			Westbound		
	Left	Through	Right	Left	Through	Right
16:00 - 16:15	0	0	3	0	0	0
16:15 - 16:30	0	0	8	0	0	0
16:30 - 16:45	0	0	6	0	0	0
16:45 - 17:00	0	0	1	0	0	0
17:00 - 17:15	0	0	11	0	0	0
17:15 - 17:30	0	0	8	0	0	0
17:30 - 17:45	0	0	13	0	0	0
17:45 - 18:00	0	0	11	0	0	0

North / South
Belle Terre Blvd

East / West
Pine Lakes Pkwy

Peak Hour
17:00 - 18:00

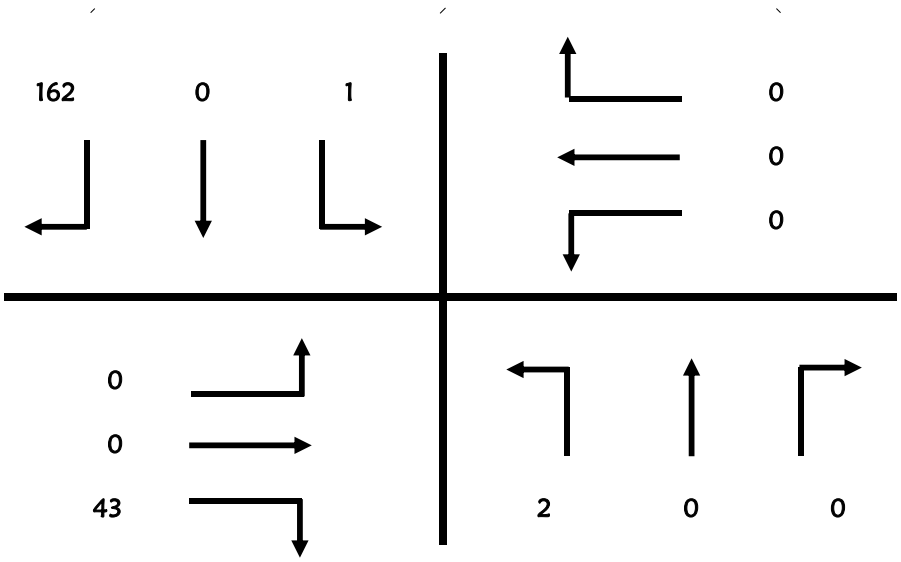

Pedestrian & Bicycle Summary

Project #: 62393 **NB/SB:** Belle Terre Blvd

Date: 9/1/2015 **EB/WB:** Pine Lakes Pkwy

		Hour								
		7:00	8:00		16:00	17:00				
		1	2	3	4	5	6	7	8	
Eastbound ▶	Bike	4	4		0	5				**13**
	Ped	0	0		0	0				**0**
Westbound ◀	Bike	0	0		0	0				**0**
	Ped	0	0		0	0				**0**

	Southbound		Northbound		
Hour	Ped ▼	Bike	Ped ▲	Bike	Hour
1 7:00	0	0	3	0	1 7:00
2 8:00	0	0	3	0	2 8:00
3					3
4 16:00	0	0	0	2	4 16:00
5 17:00	0	0	3	3	5 17:00
6					6
7					7
8					8
	0	**0**	**9**	**5**	

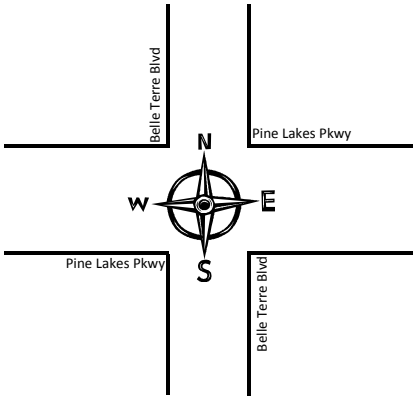

	Southbound		Northbound		
	Ped ▼	Bike	Ped ▲	Bike	Hour
1	0	0	0	1	1 7:00
2	0	0	0	0	2 8:00
3					3
4	0	0	0	0	4 16:00
5	0	0	0	1	5 17:00
6					6
7					7
8					8
	0	**0**	**0**	**2**	

Eastbound ▶	Bike	2	0		1	1				**4**
	Ped	0	0		0	0				**0**
Westbound ◀	Bike	0	0		0	0				**0**
	Ped	0	0		0	0				**0**
		7:00	8:00		16:00	17:00				
		1	2	3	4	5	6	7	8	

Hour

Appendix F

FDOT Seasonal & Axle Adjustment Factors

2014 Weekly Axle Factor Category Report - Report Type: ALL

County: 73 - FLAGLER

Week	Dates	7301 FLAGLER COUNTYWIDE	7302 US1	7303 SR20	7304 SR11
1	01/01/2014 - 01/04/2014	0.95	0.95	0.94	0.95
2	01/05/2014 - 01/11/2014	0.95	0.95	0.94	0.95
3	01/12/2014 - 01/18/2014	0.95	0.95	0.94	0.95
4	01/19/2014 - 01/25/2014	0.95	0.95	0.94	0.95
5	01/26/2014 - 02/01/2014	0.95	0.95	0.94	0.95
6	02/02/2014 - 02/08/2014	0.94	0.94	0.94	0.95
7	02/09/2014 - 02/15/2014	0.94	0.94	0.94	0.95
8	02/16/2014 - 02/22/2014	0.94	0.94	0.94	0.95
9	02/23/2014 - 03/01/2014	0.94	0.94	0.94	0.95
10	03/02/2014 - 03/08/2014	0.94	0.94	0.94	0.95
11	03/09/2014 - 03/15/2014	0.94	0.94	0.94	0.95
12	03/16/2014 - 03/22/2014	0.94	0.94	0.94	0.95
13	03/23/2014 - 03/29/2014	0.95	0.94	0.94	0.95
14	03/30/2014 - 04/05/2014	0.95	0.95	0.94	0.95
15	04/06/2014 - 04/12/2014	0.96	0.95	0.94	0.95
16	04/13/2014 - 04/19/2014	0.96	0.95	0.94	0.95
17	04/20/2014 - 04/26/2014	0.96	0.95	0.94	0.95
18	04/27/2014 - 05/03/2014	0.96	0.95	0.94	0.95
19	05/04/2014 - 05/10/2014	0.95	0.95	0.94	0.95
20	05/11/2014 - 05/17/2014	0.95	0.95	0.94	0.95
21	05/18/2014 - 05/24/2014	0.95	0.95	0.94	0.95
22	05/25/2014 - 05/31/2014	0.95	0.95	0.94	0.95
23	06/01/2014 - 06/07/2014	0.95	0.95	0.94	0.95
24	06/08/2014 - 06/14/2014	0.95	0.95	0.94	0.95
25	06/15/2014 - 06/21/2014	0.95	0.95	0.94	0.95
26	06/22/2014 - 06/28/2014	0.95	0.95	0.94	0.95
27	06/29/2014 - 07/05/2014	0.95	0.95	0.94	0.95
28	07/06/2014 - 07/12/2014	0.95	0.95	0.94	0.95
29	07/13/2014 - 07/19/2014	0.95	0.95	0.94	0.95
30	07/20/2014 - 07/26/2014	0.95	0.95	0.94	0.95
31	07/27/2014 - 08/02/2014	0.96	0.96	0.94	0.95
32	08/03/2014 - 08/09/2014	0.96	0.96	0.94	0.95
33	08/10/2014 - 08/16/2014	0.96	0.96	0.94	0.95
34	08/17/2014 - 08/23/2014	0.96	0.96	0.94	0.95
35	08/24/2014 - 08/30/2014	0.96	0.96	0.94	0.95
36	08/31/2014 - 09/06/2014	0.96	0.96	0.94	0.95
37	09/07/2014 - 09/13/2014	0.96	0.96	0.94	0.95
38	09/14/2014 - 09/20/2014	0.96	0.96	0.94	0.95
39	09/21/2014 - 09/27/2014	0.96	0.96	0.94	0.95
40	09/28/2014 - 10/04/2014	0.96	0.96	0.94	0.95
41	10/05/2014 - 10/11/2014	0.96	0.96	0.94	0.95
42	10/12/2014 - 10/18/2014	0.96	0.96	0.94	0.95
43	10/19/2014 - 10/25/2014	0.96	0.96	0.94	0.95
44	10/26/2014 - 11/01/2014	0.96	0.96	0.94	0.95
45	11/02/2014 - 11/08/2014	0.95	0.95	0.94	0.95
46	11/09/2014 - 11/15/2014	0.95	0.95	0.94	0.95
47	11/16/2014 - 11/22/2014	0.95	0.95	0.94	0.95
48	11/23/2014 - 11/29/2014	0.95	0.95	0.94	0.95
49	11/30/2014 - 12/06/2014	0.95	0.95	0.94	0.95
50	12/07/2014 - 12/13/2014	0.95	0.95	0.94	0.95
51	12/14/2014 - 12/20/2014	0.95	0.95	0.94	0.95
52	12/21/2014 - 12/27/2014	0.95	0.95	0.94	0.95
53	12/28/2014 - 12/31/2014	0.95	0.95	0.94	0.95

2014 Peak Season Factor Category Report - Report Type: ALL
Category: 7300 FLAGLER COUNTYWIDE

MOCF: 0.94

Week	Dates	SF	PSCF
1	01/01/2014 - 01/04/2014	1.00	1.06
2	01/05/2014 - 01/11/2014	1.05	1.12
3	01/12/2014 - 01/18/2014	1.10	1.17
4	01/19/2014 - 01/25/2014	1.09	1.16
5	01/26/2014 - 02/01/2014	1.08	1.15
6	02/02/2014 - 02/08/2014	1.06	1.13
7	02/09/2014 - 02/15/2014	1.05	1.12
8	02/16/2014 - 02/22/2014	1.03	1.10
9	02/23/2014 - 03/01/2014	1.00	1.06
*10	03/02/2014 - 03/08/2014	0.97	1.03
*11	03/09/2014 - 03/15/2014	0.94	1.00
*12	03/16/2014 - 03/22/2014	0.90	0.96
*13	03/23/2014 - 03/29/2014	0.91	0.97
*14	03/30/2014 - 04/05/2014	0.92	0.98
*15	04/06/2014 - 04/12/2014	0.93	0.99
*16	04/13/2014 - 04/19/2014	0.94	1.00
*17	04/20/2014 - 04/26/2014	0.95	1.01
*18	04/27/2014 - 05/03/2014	0.95	1.01
*19	05/04/2014 - 05/10/2014	0.96	1.02
*20	05/11/2014 - 05/17/2014	0.96	1.02
*21	05/18/2014 - 05/24/2014	0.97	1.03
*22	05/25/2014 - 05/31/2014	0.98	1.04
23	06/01/2014 - 06/07/2014	0.98	1.04
24	06/08/2014 - 06/14/2014	0.99	1.05
25	06/15/2014 - 06/21/2014	0.99	1.05
26	06/22/2014 - 06/28/2014	0.99	1.05
27	06/29/2014 - 07/05/2014	0.99	1.05
28	07/06/2014 - 07/12/2014	0.99	1.05
29	07/13/2014 - 07/19/2014	0.99	1.05
30	07/20/2014 - 07/26/2014	1.00	1.06
31	07/27/2014 - 08/02/2014	1.00	1.06
32	08/03/2014 - 08/09/2014	1.00	1.06
33	08/10/2014 - 08/16/2014	1.01	1.07
34	08/17/2014 - 08/23/2014	1.01	1.07
35	08/24/2014 - 08/30/2014	1.02	1.09
36	08/31/2014 - 09/06/2014	1.04	1.11
37	09/07/2014 - 09/13/2014	1.05	1.12
38	09/14/2014 - 09/20/2014	1.07	1.14
39	09/21/2014 - 09/27/2014	1.04	1.11
40	09/28/2014 - 10/04/2014	1.01	1.07
41	10/05/2014 - 10/11/2014	0.99	1.05
42	10/12/2014 - 10/18/2014	0.96	1.02
43	10/19/2014 - 10/25/2014	0.97	1.03
44	10/26/2014 - 11/01/2014	0.98	1.04
45	11/02/2014 - 11/08/2014	0.99	1.05
46	11/09/2014 - 11/15/2014	1.00	1.06
47	11/16/2014 - 11/22/2014	1.01	1.07
48	11/23/2014 - 11/29/2014	1.01	1.07
49	11/30/2014 - 12/06/2014	1.01	1.07
50	12/07/2014 - 12/13/2014	1.01	1.07
51	12/14/2014 - 12/20/2014	1.00	1.06
52	12/21/2014 - 12/27/2014	1.05	1.12
53	12/28/2014 - 12/31/2014	1.10	1.17

* Peak Season

Appendix G

Signal Timings & SYNCHRO Intersection Analysis Outputs for Year 2015

	Belle Terre Blvd. / US1 Timing							
	Phase							
	1	**2**	**3**	**4**	**5**	**6**	**7**	**8**
Min Green/Initial	0.0	15.0	0.0	8.0	6.0	15.0	0.0	0.0
Passage	0.0	3.0	0.0	3.0	3.0	3.0	0.0	0.0
Yellow	0.0	5.9	0.0	5.1	5.9	5.9	0.0	0.0
All Red	0.0	3.0	0.0	3.0	3.0	3.0	0.0	0.0
Walk	0.0	0.0	0.0	0.0	0.0	0.0	0.0	0.0
FDW	0.0	0.0	0.0	0.0	0.0	0.0	0.0	0.0
Max I	0.0	50.0	0.0	20.0	10.0	50.0	0.0	0.0
Max II	0	0	0	0	0	0	0	0

Belle Terre Pkwy. / S.R. 100								
	Timing							
	Phase							
	1 (EB)	**2 (WB)**	**3 (SB)**	**4 (NB)**	**5 (WB)**	**6 (EB)**	**7 (NB)**	**8 (SB)**
Min Green/Initial	5.0	17.0	10.0	6.0	5.0	17.0	10.0	6.0
Passage	3.0	3.0	3.0	3.0	3.0	3.0	3.0	3.0
Yellow	6.0	6.0	4.8	5.1	6.0	6.0	5.1	4.8
All Red	2.8	2.8	3.4	3.4	2.8	2.8	3.4	3.4
Walk	0.0	7.0	0.0	0.0	0.0	0.0	8.0	7.0
FDW	0.0	29.0	0.0	0.0	0.0	0.0	0.0	36.0
Max I	41.0	47.0	56.0	36.0	31.0	57.0	31.0	61.0
Max II	0	0	0	0	0	0	0	0

Belle Terre Pkwy. / Easthampton								
	Timing							
	Phase							
	1	**2**	**3**	**4**	**5**	**6**	**7**	**8**
Min Green/Initial	5.0	15.0	5.0	5.0	5.0	15.0	5.0	5.0
Passage	3.0	3.0	3.0	3.0	3.0	3.0	3.0	3.0
Yellow	4.8	4.8	4.4	3.6	4.8	4.8	3.6	4.4
All Red	2.0	2.0	2.0	2.0	2.0	2.0	2.0	2.0
Walk	0.0	7.0	0.0	7.0	0.0	0.0	0.0	0.0
FDW	0.0	16.0	0.0	29.0	0.0	0.0	0.0	0.0
Max I	20.0	65.0	40.0	40.0	45.0	65.0	20.0	40.0
Max II								

Belle Terre Pkwy. / Royal Palms Pkwy.								
	Timing							
	Phase							
	1	**2**	**3**	**4**	**5**	**6**	**7**	**8**
Min Green/Initial	7.0	15.0	0.0	7.0	7.0	15.0	0.0	7.0
Passage	3.0	3.0	3.0	3.0	3.0	3.0	3.0	3.0
Yellow	4.8	4.8	4.8	5.0	4.8	4.8	4.8	5.0
All Red	2.0	2.0	2.0	2.0	2.0	2.0	2.0	2.0
Walk	0.0	7.0	0.0	7.0	0.0	7.0	0.0	5.0
FDW	0.0	20.0	0.0	27.0	0.0	20.0	0.0	27.0
Max I	25.0	50.0	0.0	30.0	25.0	50.0	0.0	30.0
Max II								

Belle Terre Pkwy. / Rymfire Dr.								
	Timing							
	Phase							
	1	**2**	**3**	**4**	**5**	**6**	**7**	**8**
Min Green/Initial	6.0	15.0	0.0	0.0	0.0	15.0	0.0	6.0
Passage	3.0	3.5	0.0	0.0	0.0	3.5	0.0	3.0
Yellow	4.8	4.8	0.0	0.0	0.0	4.8	0.0	4.8
All Red	2.2	2.2	0.0	0.0	0.0	2.2	0.0	2.0
Walk	0.0	5.0	0.0	0.0	0.0	0.0	0.0	7.0
FDW	0.0	18.0	0.0	0.0	0.0	0.0	0.0	20.0
Max I	25.0	60.0	0.0	0.0	0.0	60.0	0.0	35.0
Max II								

Belle Terre Pkwy. / White View Dr.								
	Timing							
	Phase							
	1	**2**	**3**	**4**	**5**	**6**	**7**	**8**
Min Green/Initial	9.0	17.0	0.0	5.0	9.0	17.0	0.0	5.0
Passage	3.0	3.0	0.0	3.0	3.0	3.0	0.0	3.0
Yellow	4.8	4.8	4.0	4.0	4.8	4.8	4.0	4.0
All Red	2.0	2.0	2.0	2.0	2.0	2.0	2.0	2.0
Walk	0.0	7.0	0.0	0.0	0.0	7.0	0.0	7.0
FDW	0.0	20.0	0.0	0.0	0.0	20.0	0.0	20.0
Max I	20.0	60.0	0.0	30.0	20.0	60.0	0.0	30.0
Max II								

Belle Terre Pkwy. / School Entrance								
	Timing							
	Phase							
	1	**2**	**3**	**4**	**5**	**6**	**7**	**8**
Min Green/Initial	2.0	15.0	2.0	12.0	4.0	15.0	2.0	2.0
Passage	3.0	3.0	3.0	5.0	3.0	3.0	3.0	3.0
Yellow	4.0	4.0	4.0	4.0	4.0	4.0	4.0	4.0
All Red	1.0	1.0	1.0	1.0	1.0	1.0	1.0	1.0
Walk	0.0	0.0	0.0	12.0	0.0	20.0	0.0	0.0
FDW	0.0	0.0	0.0	30.0	0.0	10.0	0.0	0.0
Max I	0.0	55.0	0.0	40.0	15.0	55.0	0.0	0.0
Max II								

Belle Terre Pkwy. / Parkview Dr.								
	Timing							
	Phase							
	1	**2**	**3**	**4**	**5**	**6**	**7**	**8**
Min Green/Initial	-	10.0	4.0	0.0	4.0	10.0	-	-
Passage	-	3.0	3.0	0.0	3.0	3.0	-	-
Yellow	-	4.0	4.0	4.0	3.0	4.0	-	-
All Red	-	1.0	1.0	1.0	1.0	1.0	-	-
Walk	-	0.0	0.0	12.0	0.0	12.0	-	-
FDW	-	0.0	0.0	30.0	0.0	30.0	-	-
Max I	-	45.0	40.0	0.0	15.0	45.0	-	-
Max II								

Belle Terre Pkwy. / Pine Lakes S.								
	Timing							
	Phase							
	1	**2 (NB)**	**3**	**4 (EB)**	**5 (NB Left)**	**6 (SB)**	**7**	**8**
Min Green/Initial	0.0	20.0	0.0	6.0	4.0	20.0	0.0	0.0
Passage	0.0	3.0	0.0	3.0	3.0	3.0	0.0	0.0
Yellow	0.0	4.8	0.0	4.8	4.8	4.8	0.0	0.0
All Red	0.0	2.2	0.0	2.0	2.2	2.0	0.0	0.0
Walk	0.0	0.0	0.0	10.0	0.0	5.0	0.0	0.0
FDW	0.0	0.0	0.0	15.0	0.0	14.0	0.0	0.0
Max I	0.0	40.0	0.0	30.0	14.0	40.0	0.0	0.0
Max II								

Lane Group	WBL	WBR	NBT	NBR	SBL	SBT
Lane Configurations						
Volume (vph)	192	45	418	70	10	473
Ideal Flow (vphpl)	1900	1900	1900	1900	1900	1900
Lane Width (ft)	12	12	12	12	12	12
Grade (%)	0%		0%			0%
Storage Length (ft)	0	400		200	450	
Storage Lanes	1	1		1	1	
Taper Length (ft)	25				50	
Satd. Flow (prot)	1787	1583	3471	1538	1641	3406
Flt Permitted	0.950				0.950	
Satd. Flow (perm)	1787	1583	3471	1538	1641	3406
Right Turn on Red		Yes		Yes		
Satd. Flow (RTOR)		50		78		
Link Speed (mph)	50		60			60
Link Distance (ft)	1054		1255			1357
Travel Time (s)	14.4		14.3			15.4
Confl. Peds. (#/hr)						
Confl. Bikes (#/hr)						
Peak Hour Factor	0.90	0.90	0.90	0.90	0.90	0.90
Growth Factor	100%	100%	100%	100%	100%	100%
Heavy Vehicles (%)	1%	2%	4%	5%	10%	6%
Bus Blockages (#/hr)	0	0	0	0	0	0
Parking (#/hr)						
Mid-Block Traffic (%)	0%		0%			0%
Shared Lane Traffic (%)						
Lane Group Flow (vph)	213	50	464	78	11	526
Turn Type	Prot	Prot	NA	Prot	Prot	NA
Protected Phases	4	4	6	6	5	2
Permitted Phases						
Detector Phase	4	4	6	6	5	2
Switch Phase						
Minimum Initial (s)	8.0	8.0	15.0	15.0	6.0	15.0
Minimum Split (s)	16.1	16.1	23.9	23.9	14.9	23.9
Total Split (s)	30.0	30.0	42.0	42.0	18.0	60.0
Total Split (%)	33.3%	33.3%	46.7%	46.7%	20.0%	66.7%
Maximum Green (s)	21.9	21.9	33.1	33.1	9.1	51.1
Yellow Time (s)	5.1	5.1	5.9	5.9	5.9	5.9
All-Red Time (s)	3.0	3.0	3.0	3.0	3.0	3.0
Lost Time Adjust (s)	0.0	0.0	0.0	0.0	0.0	0.0
Total Lost Time (s)	8.1	8.1	8.9	8.9	8.9	8.9
Lead/Lag			Lag	Lag	Lead	
Lead-Lag Optimize?			Yes	Yes	Yes	
Vehicle Extension (s)	3.0	3.0	3.0	3.0	3.0	3.0
Minimum Gap (s)	3.0	3.0	3.0	3.0	3.0	3.0
Time Before Reduce (s)	0.0	0.0	0.0	0.0	0.0	0.0
Time To Reduce (s)	0.0	0.0	0.0	0.0	0.0	0.0
Recall Mode	None	None	Min	Min	None	Min
Walk Time (s)						
Flash Dont Walk (s)						

Lane Group	WBL	WBR	NBT	NBR	SBL	SBT
Pedestrian Calls (#/hr)						
Act Effct Green (s)	11.2	11.2	16.8	16.8	6.4	19.0
Actuated g/C Ratio	0.23	0.23	0.35	0.35	0.13	0.40
v/c Ratio	0.51	0.12	0.38	0.13	0.05	0.39
Control Delay	21.7	7.2	14.7	5.6	23.4	11.3
Queue Delay	0.0	0.0	0.0	0.0	0.0	0.0
Total Delay	21.7	7.2	14.7	5.6	23.4	11.3
LOS	C	A	B	A	C	B
Approach Delay	18.9		13.3			11.6
Approach LOS	B		B			B

Intersection Summary	
Area Type: Other	
Cycle Length: 90	
Actuated Cycle Length: 48	
Natural Cycle: 60	
Control Type: Actuated-Uncoordinated	
Maximum v/c Ratio: 0.51	
Intersection Signal Delay: 13.7	Intersection LOS: B
Intersection Capacity Utilization 37.9%	ICU Level of Service A
Analysis Period (min) 15	

Splits and Phases: 1: SR 5 (US 1) & Belle Terre Blvd

Intersection	
Int Delay, s/veh	1.8

Movement	EBL	EBT	EBR	WBL	WBT	WBR	NBL	NBT	NBR	SBL	SBT	SBR
Vol, veh/h	2	77	1	5	215	18	4	0	2	31	0	18
Conflicting Peds, #/hr	0	0	0	0	0	0	0	0	0	0	0	0
Sign Control	Free	Free	Free	Free	Free	Free	Stop	Stop	Stop	Stop	Stop	Stop
RT Channelized	-	-	None	-	-	None	-	-	None	-	-	None
Storage Length	-	-	-	-	-	-	-	-	-	-	-	-
Veh in Median Storage, #	-	0	-	-	0	-	-	0	-	-	0	-
Grade, %	-	0	-	-	0	-	-	0	-	-	0	-
Peak Hour Factor	89	89	89	89	89	89	89	89	89	89	89	89
Heavy Vehicles, %	0	8	0	0	1	8	0	0	0	7	0	0
Mvmt Flow	2	87	1	6	242	20	4	0	2	35	0	20

Major/Minor	Major1			Major2			Minor1			Minor2		
Conflicting Flow All	262	0	0	88	0	0	365	365	87	356	355	252
Stage 1	-	-	-	-	-	-	92	92	-	263	263	-
Stage 2	-	-	-	-	-	-	273	273	-	93	92	-
Critical Hdwy	4.1	-	-	4.1	-	-	7.1	6.5	6.2	7.17	6.5	6.2
Critical Hdwy Stg 1	-	-	-	-	-	-	6.1	5.5	-	6.17	5.5	-
Critical Hdwy Stg 2	-	-	-	-	-	-	6.1	5.5	-	6.17	5.5	-
Follow-up Hdwy	2.2	-	-	2.2	-	-	3.5	4	3.3	3.563	4	3.3
Pot Cap-1 Maneuver	1314	-	-	1520	-	-	595	566	977	590	574	792
Stage 1	-	-	-	-	-	-	920	823	-	731	694	-
Stage 2	-	-	-	-	-	-	737	688	-	902	823	-
Platoon blocked, %		-	-		-	-						
Mov Cap-1 Maneuver	1314	-	-	1520	-	-	577	562	977	586	570	792
Mov Cap-2 Maneuver	-	-	-	-	-	-	577	562	-	586	570	-
Stage 1	-	-	-	-	-	-	918	821	-	730	691	-
Stage 2	-	-	-	-	-	-	715	685	-	898	821	-

Approach	EB	WB	NB	SB
HCM Control Delay, s	0.2	0.2	10.4	11.1
HCM LOS			B	B

Minor Lane/Major Mvmt	NBLn1	EBL	EBT	EBR	WBL	WBT	WBR	SBLn1
Capacity (veh/h)	668	1314	-	-	1520	-	-	648
HCM Lane V/C Ratio	0.01	0.002	-	-	0.004	-	-	0.085
HCM Control Delay (s)	10.4	7.7	0	-	7.4	0	-	11.1
HCM Lane LOS	B	A	A	-	A	A	-	B
HCM 95th %tile Q(veh)	0	0	-	-	0	-	-	0.3

Intersection	
Int Delay, s/veh	0.5

Movement	EBT	EBR	WBL	WBT	NBL	NBR
Vol, veh/h	109	1	1	229	9	10
Conflicting Peds, #/hr	0	0	0	0	0	0
Sign Control	Free	Free	Free	Free	Stop	Stop
RT Channelized	-	None	-	None	-	None
Storage Length	-	-	-	-	0	-
Veh in Median Storage, #	0	-	-	0	0	-
Grade, %	0	-	-	0	0	-
Peak Hour Factor	88	88	88	88	88	88
Heavy Vehicles, %	9	0	0	2	0	0
Mvmt Flow	124	1	1	260	10	11

Major/Minor	Major1		Major2		Minor1	
Conflicting Flow All	0	0	125	0	387	124
Stage 1	-	-	-	-	124	-
Stage 2	-	-	-	-	263	-
Critical Hdwy	-	-	4.1	-	6.4	6.2
Critical Hdwy Stg 1	-	-	-	-	5.4	-
Critical Hdwy Stg 2	-	-	-	-	5.4	-
Follow-up Hdwy	-	-	2.2	-	3.5	3.3
Pot Cap-1 Maneuver	-	-	1474	-	620	932
Stage 1	-	-	-	-	907	-
Stage 2	-	-	-	-	786	-
Platoon blocked, %	-	-		-		
Mov Cap-1 Maneuver	-	-	1474	-	619	932
Mov Cap-2 Maneuver	-	-	-	-	619	-
Stage 1	-	-	-	-	907	-
Stage 2	-	-	-	-	785	-

Approach	EB	WB	NB
HCM Control Delay, s	0	0	9.9
HCM LOS			A

Minor Lane/Major Mvmt	NBLn1	EBT	EBR	WBL	WBT
Capacity (veh/h)	752	-	-	1474	-
HCM Lane V/C Ratio	0.029	-	-	0.001	-
HCM Control Delay (s)	9.9	-	-	7.4	0
HCM Lane LOS	A	-	-	A	A
HCM 95th %tile Q(veh)	0.1	-	-	0	-

Intersection	
Int Delay, s/veh	0.9

Movement	EBL	EBT	EBR	WBL	WBT	WBR	NBL	NBT	NBR	SBL	SBT	SBR
Vol, veh/h	6	105	8	2	219	0	8	0	8	5	0	3
Conflicting Peds, #/hr	0	0	0	0	0	0	0	0	0	0	0	0
Sign Control	Free	Free	Free	Free	Free	Free	Stop	Stop	Stop	Stop	Stop	Stop
RT Channelized	-	-	None	-	-	None	-	-	None	-	-	None
Storage Length	-	-	-	-	-	-	-	-	-	-	-	-
Veh in Median Storage, #	-	0	-	-	0	-	-	0	-	-	0	-
Grade, %	-	0	-	-	0	-	-	0	-	-	0	-
Peak Hour Factor	85	85	85	85	85	85	85	85	85	85	85	85
Heavy Vehicles, %	0	8	0	0	1	0	0	0	13	0	0	0
Mvmt Flow	7	124	9	2	258	0	9	0	9	6	0	4

Major/Minor	Major1			Major2			Minor1			Minor2		
Conflicting Flow All	258	0	0	133	0	0	406	404	128	409	409	258
Stage 1	-	-	-	-	-	-	142	142	-	262	262	-
Stage 2	-	-	-	-	-	-	264	262	-	147	147	-
Critical Hdwy	4.1	-	-	4.1	-	-	7.1	6.5	6.33	7.1	6.5	6.2
Critical Hdwy Stg 1	-	-	-	-	-	-	6.1	5.5	-	6.1	5.5	-
Critical Hdwy Stg 2	-	-	-	-	-	-	6.1	5.5	-	6.1	5.5	-
Follow-up Hdwy	2.2	-	-	2.2	-	-	3.5	4	3.417	3.5	4	3.3
Pot Cap-1 Maneuver	1318	-	-	1464	-	-	559	539	893	556	535	786
Stage 1	-	-	-	-	-	-	866	783	-	747	695	-
Stage 2	-	-	-	-	-	-	746	695	-	860	779	-
Platoon blocked, %		-	-		-	-						
Mov Cap-1 Maneuver	1318	-	-	1464	-	-	553	535	893	547	531	786
Mov Cap-2 Maneuver	-	-	-	-	-	-	553	535	-	547	531	-
Stage 1	-	-	-	-	-	-	861	778	-	743	694	-
Stage 2	-	-	-	-	-	-	741	694	-	846	774	-

Approach	EB	WB	NB	SB
HCM Control Delay, s	0.4	0.1	10.4	10.9
HCM LOS			B	B

Minor Lane/Major Mvmt	NBLn1	EBL	EBT	EBR	WBL	WBT	WBR	SBLn1
Capacity (veh/h)	683	1318	-	-	1464	-	-	617
HCM Lane V/C Ratio	0.028	0.005	-	-	0.002	-	-	0.015
HCM Control Delay (s)	10.4	7.7	0	-	7.5	0	-	10.9
HCM Lane LOS	B	A	A	-	A	A	-	B
HCM 95th %tile Q(veh)	0.1	0	-	-	0	-	-	0

Intersection	
Int Delay, s/veh	1.1

Movement	EBT	EBR	WBL	WBT	NBL	NBR
Vol, veh/h	109	9	12	214	7	25
Conflicting Peds, #/hr	0	0	0	0	0	0
Sign Control	Free	Free	Free	Free	Stop	Stop
RT Channelized	-	None	-	None	-	None
Storage Length	-	-	-	-	0	-
Veh in Median Storage, #	0	-	-	0	0	-
Grade, %	0	-	-	0	0	-
Peak Hour Factor	83	83	83	83	83	83
Heavy Vehicles, %	8	33	0	1	14	0
Mvmt Flow	131	11	14	258	8	30

Major/Minor	Major1		Major2		Minor1	
Conflicting Flow All	0	0	142	0	424	137
Stage 1	-	-	-	-	137	-
Stage 2	-	-	-	-	287	-
Critical Hdwy	-	-	4.1	-	6.54	6.2
Critical Hdwy Stg 1	-	-	-	-	5.54	-
Critical Hdwy Stg 2	-	-	-	-	5.54	-
Follow-up Hdwy	-	-	2.2	-	3.626	3.3
Pot Cap-1 Maneuver	-	-	1453	-	565	917
Stage 1	-	-	-	-	861	-
Stage 2	-	-	-	-	735	-
Platoon blocked, %	-	-		-		
Mov Cap-1 Maneuver	-	-	1453	-	559	917
Mov Cap-2 Maneuver	-	-	-	-	559	-
Stage 1	-	-	-	-	861	-
Stage 2	-	-	-	-	727	-

Approach	EB	WB	NB
HCM Control Delay, s	0	0.4	9.7
HCM LOS			A

Minor Lane/Major Mvmt	NBLn1	EBT	EBR	WBL	WBT
Capacity (veh/h)	804	-	-	1453	-
HCM Lane V/C Ratio	0.048	-	-	0.01	-
HCM Control Delay (s)	9.7	-	-	7.5	0
HCM Lane LOS	A	-	-	A	A
HCM 95th %tile Q(veh)	0.2	-	-	0	-

Intersection	
Int Delay, s/veh	1.2

Movement	WBL	WBR	NBT	NBR	SBL	SBT
Vol, veh/h	28	9	123	8	4	205
Conflicting Peds, #/hr	0	0	0	0	0	0
Sign Control	Stop	Stop	Free	Free	Free	Free
RT Channelized	-	None	-	None	-	None
Storage Length	0	-	-	-	-	-
Veh in Median Storage, #	0	-	0	-	-	0
Grade, %	0	-	0	-	-	0
Peak Hour Factor	87	87	87	87	87	87
Heavy Vehicles, %	0	0	5	25	50	1
Mvmt Flow	32	10	141	9	5	236

Major/Minor	Minor1		Major1		Major2	
Conflicting Flow All	391	146	0	0	151	0
Stage 1	146	-	-	-	-	-
Stage 2	245	-	-	-	-	-
Critical Hdwy	6.4	6.2	-	-	4.6	-
Critical Hdwy Stg 1	5.4	-	-	-	-	-
Critical Hdwy Stg 2	5.4	-	-	-	-	-
Follow-up Hdwy	3.5	3.3	-	-	2.65	-
Pot Cap-1 Maneuver	617	906	-	-	1184	-
Stage 1	886	-	-	-	-	-
Stage 2	800	-	-	-	-	-
Platoon blocked, %			-	-		-
Mov Cap-1 Maneuver	614	906	-	-	1184	-
Mov Cap-2 Maneuver	614	-	-	-	-	-
Stage 1	886	-	-	-	-	-
Stage 2	796	-	-	-	-	-

Approach	WB	NB	SB
HCM Control Delay, s	10.8	0	0.2
HCM LOS	B		

Minor Lane/Major Mvmt	NBT	NBR	WBLn1	SBL	SBT
Capacity (veh/h)	-	-	666	1184	-
HCM Lane V/C Ratio	-	-	0.064	0.004	-
HCM Control Delay (s)	-	-	10.8	8.1	0
HCM Lane LOS	-	-	B	A	A
HCM 95th %tile Q(veh)	-	-	0.2	0	-

Intersection	
Int Delay, s/veh	0.9

Movement	EBL	EBR	NBL	NBT	SBT	SBR
Vol, veh/h	11	18	1	131	191	8
Conflicting Peds, #/hr	0	0	0	0	0	0
Sign Control	Stop	Stop	Free	Free	Free	Free
RT Channelized	-	None	-	None	-	None
Storage Length	0	-	-	-	-	-
Veh in Median Storage, #	0	-	-	0	0	-
Grade, %	0	-	-	0	0	-
Peak Hour Factor	90	90	90	90	90	90
Heavy Vehicles, %	0	6	0	3	3	0
Mvmt Flow	12	20	1	146	212	9

Major/Minor	Minor2		Major1		Major2	
Conflicting Flow All	365	217	221	0	-	0
Stage 1	217	-	-	-	-	-
Stage 2	148	-	-	-	-	-
Critical Hdwy	6.4	6.26	4.1	-	-	-
Critical Hdwy Stg 1	5.4	-	-	-	-	-
Critical Hdwy Stg 2	5.4	-	-	-	-	-
Follow-up Hdwy	3.5	3.354	2.2	-	-	-
Pot Cap-1 Maneuver	639	813	1360	-	-	-
Stage 1	824	-	-	-	-	-
Stage 2	884	-	-	-	-	-
Platoon blocked, %				-	-	-
Mov Cap-1 Maneuver	638	813	1360	-	-	-
Mov Cap-2 Maneuver	638	-	-	-	-	-
Stage 1	824	-	-	-	-	-
Stage 2	883	-	-	-	-	-

Approach	EB	NB	SB
HCM Control Delay, s	10.1	0.1	0
HCM LOS	B		

Minor Lane/Major Mvmt	NBL	NBT	EBLn1	SBT	SBR
Capacity (veh/h)	1360	-	736	-	-
HCM Lane V/C Ratio	0.001	-	0.044	-	-
HCM Control Delay (s)	7.6	0	10.1	-	-
HCM Lane LOS	A	A	B	-	-
HCM 95th %tile Q(veh)	0	-	0.1	-	-

Intersection	
Int Delay, s/veh	1.1

Movement	EBL	EBR	NBL	NBT	SBT	SBR
Vol, veh/h	16	21	4	138	182	4
Conflicting Peds, #/hr	0	0	0	0	0	0
Sign Control	Stop	Stop	Free	Free	Free	Free
RT Channelized	-	None	-	None	-	None
Storage Length	0	-	-	-	-	-
Veh in Median Storage, #	0	-	-	0	0	-
Grade, %	0	-	-	0	0	-
Peak Hour Factor	82	82	82	82	82	82
Heavy Vehicles, %	0	0	0	4	3	40
Mvmt Flow	20	26	5	168	222	5

Major/Minor	Minor2		Major1		Major2	
Conflicting Flow All	402	224	227	0	-	0
Stage 1	224	-	-	-	-	-
Stage 2	178	-	-	-	-	-
Critical Hdwy	6.4	6.2	4.1	-	-	-
Critical Hdwy Stg 1	5.4	-	-	-	-	-
Critical Hdwy Stg 2	5.4	-	-	-	-	-
Follow-up Hdwy	3.5	3.3	2.2	-	-	-
Pot Cap-1 Maneuver	608	820	1353	-	-	-
Stage 1	818	-	-	-	-	-
Stage 2	858	-	-	-	-	-
Platoon blocked, %				-	-	-
Mov Cap-1 Maneuver	606	820	1353	-	-	-
Mov Cap-2 Maneuver	606	-	-	-	-	-
Stage 1	818	-	-	-	-	-
Stage 2	855	-	-	-	-	-

Approach	EB	NB	SB
HCM Control Delay, s	10.4	0.2	0
HCM LOS	B		

Minor Lane/Major Mvmt	NBL	NBT	EBLn1	SBT	SBR
Capacity (veh/h)	1353	-	711	-	-
HCM Lane V/C Ratio	0.004	-	0.063	-	-
HCM Control Delay (s)	7.7	0	10.4	-	-
HCM Lane LOS	A	A	B	-	-
HCM 95th %tile Q(veh)	0	-	0.2	-	-

Intersection	
Int Delay, s/veh	2.3

Movement	WBL	WBR	NBT	NBR	SBL	SBT
Vol, veh/h	16	64	149	5	20	170
Conflicting Peds, #/hr	0	0	0	0	0	0
Sign Control	Stop	Stop	Free	Free	Free	Free
RT Channelized	-	None	-	None	-	None
Storage Length	0	-	-	-	-	-
Veh in Median Storage, #	0	-	0	-	-	0
Grade, %	0	-	0	-	-	0
Peak Hour Factor	79	79	79	79	79	79
Heavy Vehicles, %	7	5	3	0	0	4
Mvmt Flow	20	81	189	6	25	215

Major/Minor	Minor1		Major1		Major2	
Conflicting Flow All	458	192	0	0	195	0
Stage 1	192	-	-	-	-	-
Stage 2	266	-	-	-	-	-
Critical Hdwy	6.47	6.25	-	-	4.1	-
Critical Hdwy Stg 1	5.47	-	-	-	-	-
Critical Hdwy Stg 2	5.47	-	-	-	-	-
Follow-up Hdwy	3.563	3.345	-	-	2.2	-
Pot Cap-1 Maneuver	552	842	-	-	1390	-
Stage 1	829	-	-	-	-	-
Stage 2	767	-	-	-	-	-
Platoon blocked, %			-	-		-
Mov Cap-1 Maneuver	541	842	-	-	1390	-
Mov Cap-2 Maneuver	541	-	-	-	-	-
Stage 1	829	-	-	-	-	-
Stage 2	752	-	-	-	-	-

Approach	WB	NB	SB
HCM Control Delay, s	10.5	0	0.8
HCM LOS	B		

Minor Lane/Major Mvmt	NBT	NBR	WBLn1	SBL	SBT
Capacity (veh/h)	-	-	758	1390	-
HCM Lane V/C Ratio	-	-	0.134	0.018	-
HCM Control Delay (s)	-	-	10.5	7.6	0
HCM Lane LOS	-	-	B	A	A
HCM 95th %tile Q(veh)	-	-	0.5	0.1	-

Intersection	
Int Delay, s/veh	0.8

Movement	EBL	EBR	NBL	NBT	SBT	SBR
Vol, veh/h	24	7	0	213	183	7
Conflicting Peds, #/hr	0	0	0	0	0	0
Sign Control	Stop	Stop	Free	Free	Free	Free
RT Channelized	-	None	-	None	-	None
Storage Length	0	-	-	-	-	-
Veh in Median Storage, #	0	-	-	0	0	-
Grade, %	0	-	-	0	0	-
Peak Hour Factor	84	84	84	84	84	84
Heavy Vehicles, %	0	0	0	4	3	14
Mvmt Flow	29	8	0	254	218	8

Major/Minor	Minor2		Major1		Major2	
Conflicting Flow All	476	222	226	0	-	0
Stage 1	222	-	-	-	-	-
Stage 2	254	-	-	-	-	-
Critical Hdwy	6.4	6.2	4.1	-	-	-
Critical Hdwy Stg 1	5.4	-	-	-	-	-
Critical Hdwy Stg 2	5.4	-	-	-	-	-
Follow-up Hdwy	3.5	3.3	2.2	-	-	-
Pot Cap-1 Maneuver	551	823	1354	-	-	-
Stage 1	820	-	-	-	-	-
Stage 2	793	-	-	-	-	-
Platoon blocked, %				-	-	-
Mov Cap-1 Maneuver	551	823	1354	-	-	-
Mov Cap-2 Maneuver	551	-	-	-	-	-
Stage 1	820	-	-	-	-	-
Stage 2	793	-	-	-	-	-

Approach	EB	NB	SB
HCM Control Delay, s	11.5	0	0
HCM LOS	B		

Minor Lane/Major Mvmt	NBL	NBT	EBLn1	SBT	SBR
Capacity (veh/h)	1354	-	595	-	-
HCM Lane V/C Ratio	-	-	0.062	-	-
HCM Control Delay (s)	0	-	11.5	-	-
HCM Lane LOS	A	-	B	-	-
HCM 95th %tile Q(veh)	0	-	0.2	-	-

Intersection	
Int Delay, s/veh	0.3

Movement	EBL	EBR	NBL	NBT	SBT	SBR
Vol, veh/h	9	3	0	237	187	5
Conflicting Peds, #/hr	0	0	0	0	0	0
Sign Control	Stop	Stop	Free	Free	Free	Free
RT Channelized	-	None	-	None	-	None
Storage Length	0	-	-	-	-	-
Veh in Median Storage, #	0	-	-	0	0	-
Grade, %	0	-	-	0	0	-
Peak Hour Factor	84	84	84	84	84	84
Heavy Vehicles, %	0	0	0	3	5	40
Mvmt Flow	11	4	0	282	223	6

Major/Minor	Minor2		Major1		Major2	
Conflicting Flow All	508	226	229	0	-	0
Stage 1	226	-	-	-	-	-
Stage 2	282	-	-	-	-	-
Critical Hdwy	6.4	6.2	4.1	-	-	-
Critical Hdwy Stg 1	5.4	-	-	-	-	-
Critical Hdwy Stg 2	5.4	-	-	-	-	-
Follow-up Hdwy	3.5	3.3	2.2	-	-	-
Pot Cap-1 Maneuver	528	818	1351	-	-	-
Stage 1	816	-	-	-	-	-
Stage 2	770	-	-	-	-	-
Platoon blocked, %				-	-	-
Mov Cap-1 Maneuver	528	818	1351	-	-	-
Mov Cap-2 Maneuver	528	-	-	-	-	-
Stage 1	816	-	-	-	-	-
Stage 2	770	-	-	-	-	-

Approach	EB	NB	SB
HCM Control Delay, s	11.4	0	0
HCM LOS	B		

Minor Lane/Major Mvmt	NBL	NBT	EBLn1	SBT	SBR
Capacity (veh/h)	1351	-	579	-	-
HCM Lane V/C Ratio	-	-	0.025	-	-
HCM Control Delay (s)	0	-	11.4	-	-
HCM Lane LOS	A	-	B	-	-
HCM 95th %tile Q(veh)	0	-	0.1	-	-

Intersection	
Int Delay, s/veh	0.7

Movement	EBL	EBR	NBL	NBT	SBT	SBR
Vol, veh/h	22	5	1	245	187	6
Conflicting Peds, #/hr	0	0	0	0	0	0
Sign Control	Stop	Stop	Free	Free	Free	Free
RT Channelized	-	None	-	None	-	None
Storage Length	0	-	-	-	-	-
Veh in Median Storage, #	0	-	-	0	0	-
Grade, %	0	-	-	0	0	-
Peak Hour Factor	86	86	86	86	86	86
Heavy Vehicles, %	0	40	0	4	4	0
Mvmt Flow	26	6	1	285	217	7

Major/Minor	Minor2		Major1		Major2	
Conflicting Flow All	508	221	224	0	-	0
Stage 1	221	-	-	-	-	-
Stage 2	287	-	-	-	-	-
Critical Hdwy	6.4	6.6	4.1	-	-	-
Critical Hdwy Stg 1	5.4	-	-	-	-	-
Critical Hdwy Stg 2	5.4	-	-	-	-	-
Follow-up Hdwy	3.5	3.66	2.2	-	-	-
Pot Cap-1 Maneuver	528	732	1357	-	-	-
Stage 1	821	-	-	-	-	-
Stage 2	766	-	-	-	-	-
Platoon blocked, %				-	-	-
Mov Cap-1 Maneuver	527	732	1357	-	-	-
Mov Cap-2 Maneuver	527	-	-	-	-	-
Stage 1	821	-	-	-	-	-
Stage 2	765	-	-	-	-	-

Approach	EB	NB	SB
HCM Control Delay, s	11.9	0	0
HCM LOS	B		

Minor Lane/Major Mvmt	NBL	NBT	EBLn1	SBT	SBR
Capacity (veh/h)	1357	-	556	-	-
HCM Lane V/C Ratio	0.001	-	0.056	-	-
HCM Control Delay (s)	7.7	0	11.9	-	-
HCM Lane LOS	A	A	B	-	-
HCM 95th %tile Q(veh)	0	-	0.2	-	-

Intersection	
Int Delay, s/veh	1

Movement	EBL	EBR	NBL	NBT	SBT	SBR
Vol, veh/h	19	20	6	261	173	7
Conflicting Peds, #/hr	0	0	0	0	0	0
Sign Control	Stop	Stop	Free	Free	Free	Free
RT Channelized	-	None	-	None	-	None
Storage Length	0	-	-	-	-	-
Veh in Median Storage, #	0	-	-	0	0	-
Grade, %	0	-	-	0	0	-
Peak Hour Factor	87	87	87	87	87	87
Heavy Vehicles, %	0	0	17	3	4	0
Mvmt Flow	22	23	7	300	199	8

Major/Minor	Minor2		Major1		Major2	
Conflicting Flow All	517	203	207	0	-	0
Stage 1	203	-	-	-	-	-
Stage 2	314	-	-	-	-	-
Critical Hdwy	6.4	6.2	4.27	-	-	-
Critical Hdwy Stg 1	5.4	-	-	-	-	-
Critical Hdwy Stg 2	5.4	-	-	-	-	-
Follow-up Hdwy	3.5	3.3	2.353	-	-	-
Pot Cap-1 Maneuver	522	843	1280	-	-	-
Stage 1	836	-	-	-	-	-
Stage 2	745	-	-	-	-	-
Platoon blocked, %				-	-	-
Mov Cap-1 Maneuver	518	843	1280	-	-	-
Mov Cap-2 Maneuver	518	-	-	-	-	-
Stage 1	836	-	-	-	-	-
Stage 2	740	-	-	-	-	-

Approach	EB	NB	SB
HCM Control Delay, s	11	0.2	0
HCM LOS	B		

Minor Lane/Major Mvmt	NBL	NBT	EBLn1	SBT	SBR
Capacity (veh/h)	1280	-	646	-	-
HCM Lane V/C Ratio	0.005	-	0.069	-	-
HCM Control Delay (s)	7.8	0	11	-	-
HCM Lane LOS	A	A	B	-	-
HCM 95th %tile Q(veh)	0	-	0.2	-	-

Intersection	
Int Delay, s/veh	1.5

Movement	EBL	EBR	NBL	NBT	SBT	SBR
Vol, veh/h	54	4	2	278	179	15
Conflicting Peds, #/hr	0	0	0	0	0	0
Sign Control	Stop	Stop	Free	Free	Free	Free
RT Channelized	-	None	-	None	-	None
Storage Length	0	-	-	-	-	-
Veh in Median Storage, #	0	-	-	0	0	-
Grade, %	0	-	-	0	0	-
Peak Hour Factor	88	88	88	88	88	88
Heavy Vehicles, %	6	0	0	3	5	0
Mvmt Flow	61	5	2	316	203	17

Major/Minor	Minor2		Major1		Major2	
Conflicting Flow All	532	212	220	0	-	0
Stage 1	212	-	-	-	-	-
Stage 2	320	-	-	-	-	-
Critical Hdwy	6.46	6.2	4.1	-	-	-
Critical Hdwy Stg 1	5.46	-	-	-	-	-
Critical Hdwy Stg 2	5.46	-	-	-	-	-
Follow-up Hdwy	3.554	3.3	2.2	-	-	-
Pot Cap-1 Maneuver	501	833	1361	-	-	-
Stage 1	814	-	-	-	-	-
Stage 2	727	-	-	-	-	-
Platoon blocked, %				-	-	-
Mov Cap-1 Maneuver	500	833	1361	-	-	-
Mov Cap-2 Maneuver	500	-	-	-	-	-
Stage 1	814	-	-	-	-	-
Stage 2	726	-	-	-	-	-

Approach	EB	NB	SB
HCM Control Delay, s	13	0.1	0
HCM LOS	B		

Minor Lane/Major Mvmt	NBL	NBT	EBLn1	SBT	SBR
Capacity (veh/h)	1361	-	514	-	-
HCM Lane V/C Ratio	0.002	-	0.128	-	-
HCM Control Delay (s)	7.7	0	13	-	-
HCM Lane LOS	A	A	B	-	-
HCM 95th %tile Q(veh)	0	-	0.4	-	-

Lane Group	EBL	EBT	EBR	WBL	WBT	WBR	NBL	NBT	NBR	SBL	SBT	SBR
Lane Configurations												
Volume (vph)	107	369	17	77	489	334	63	112	157	493	101	244
Ideal Flow (vphpl)	1900	1900	1900	1900	1900	1900	1900	1900	1900	1900	1900	1900
Lane Width (ft)	12	12	12	12	12	12	12	12	12	12	12	12
Grade (%)		0%			0%			0%			0%	
Storage Length (ft)	450		475	485		485	0		280	525		0
Storage Lanes	1		1	1		1	1		1	2		1
Taper Length (ft)	50			50			200			25		
Satd. Flow (prot)	1641	3374	1615	1656	3438	1509	1687	1710	0	3400	1863	1615
Flt Permitted	0.950			0.950			0.950			0.950		
Satd. Flow (perm)	1641	3374	1615	1656	3438	1509	1687	1710	0	3400	1863	1615
Right Turn on Red			Yes			Yes			Yes			Yes
Satd. Flow (RTOR)			188			375		33				274
Link Speed (mph)		55			55			50			45	
Link Distance (ft)		2394			2403			1138			1482	
Travel Time (s)		29.7			29.8			15.5			22.5	
Confl. Peds. (#/hr)												
Confl. Bikes (#/hr)												
Peak Hour Factor	0.89	0.89	0.89	0.89	0.89	0.89	0.89	0.89	0.89	0.89	0.89	0.89
Growth Factor	100%	100%	100%	100%	100%	100%	100%	100%	100%	100%	100%	100%
Heavy Vehicles (%)	10%	7%	0%	9%	5%	7%	7%	2%	1%	3%	2%	0%
Bus Blockages (#/hr)	0	0	0	0	0	0	0	0	0	0	0	0
Parking (#/hr)												
Mid-Block Traffic (%)		0%			0%			0%			0%	
Shared Lane Traffic (%)												
Lane Group Flow (vph)	120	415	19	87	549	375	71	302	0	554	113	274
Turn Type	Prot	NA	Prot	Prot	NA	pm+ov	Prot	NA		Prot	NA	Perm
Protected Phases	1	6	6	5	2	3	7	4		3	8	
Permitted Phases						2						8
Detector Phase	1	6	6	5	2	3	7	4		3	8	8
Switch Phase												
Minimum Initial (s)	5.0	17.0	17.0	5.0	17.0	10.0	10.0	6.0		10.0	6.0	6.0
Minimum Split (s)	13.8	25.8	25.8	13.8	44.8	18.2	18.5	14.5		18.2	51.2	51.2
Total Split (s)	41.0	57.0	57.0	31.0	47.0	56.0	31.0	36.0		56.0	61.0	61.0
Total Split (%)	22.8%	31.7%	31.7%	17.2%	26.1%	31.1%	17.2%	20.0%		31.1%	33.9%	33.9%
Maximum Green (s)	32.2	48.2	48.2	22.2	38.2	47.8	22.5	27.5		47.8	52.8	52.8
Yellow Time (s)	6.0	6.0	6.0	6.0	6.0	4.8	5.1	5.1		4.8	4.8	4.8
All-Red Time (s)	2.8	2.8	2.8	2.8	2.8	3.4	3.4	3.4		3.4	3.4	3.4
Lost Time Adjust (s)	0.0	0.0	0.0	0.0	0.0	0.0	0.0	0.0		0.0	0.0	0.0
Total Lost Time (s)	8.8	8.8	8.8	8.8	8.8	8.2	8.5	8.5		8.2	8.2	8.2
Lead/Lag	Lead	Lag	Lag	Lead	Lag	Lead	Lead	Lag		Lead	Lag	Lag
Lead-Lag Optimize?	Yes	Yes	Yes	Yes	Yes	Yes	Yes	Yes		Yes	Yes	Yes
Vehicle Extension (s)	3.0	3.0	3.0	3.0	3.0	3.0	3.0	3.0		3.0	3.0	3.0
Minimum Gap (s)	3.0	3.0	3.0	3.0	3.0	3.0	3.0	3.0		3.0	3.0	3.0
Time Before Reduce (s)	0.0	0.0	0.0	0.0	0.0	0.0	0.0	0.0		0.0	0.0	0.0
Time To Reduce (s)	0.0	0.0	0.0	0.0	0.0	0.0	0.0	0.0		0.0	0.0	0.0
Recall Mode	None	Min	Min	None	Min	Min	None	None		Min	None	None
Walk Time (s)					7.0						7.0	7.0
Flash Dont Walk (s)					29.0						36.0	36.0

Lane Group	EBL	EBT	EBR	WBL	WBT	WBR	NBL	NBT	NBR	SBL	SBT	SBR
Pedestrian Calls (#/hr)					0						0	0
Act Effct Green (s)	15.8	30.6	30.6	12.9	27.7	65.5	12.3	28.0		28.8	44.5	44.5
Actuated g/C Ratio	0.12	0.23	0.23	0.10	0.20	0.48	0.09	0.21		0.21	0.33	0.33
v/c Ratio	0.63	0.54	0.04	0.55	0.78	0.41	0.46	0.79		0.77	0.18	0.38
Control Delay	74.3	49.7	0.1	75.3	60.2	3.1	73.0	63.5		58.4	36.1	5.8
Queue Delay	0.0	0.0	0.0	0.0	0.0	0.0	0.0	0.0		0.0	0.0	0.0
Total Delay	74.3	49.7	0.1	75.3	60.2	3.1	73.0	63.5		58.4	36.1	5.8
LOS	E	D	A	E	E	A	E	E		E	D	A
Approach Delay		53.3			40.3			65.3			40.4	
Approach LOS		D			D			E			D	

Intersection Summary

Area Type: Other
Cycle Length: 180
Actuated Cycle Length: 135.2
Natural Cycle: 130
Control Type: Actuated-Uncoordinated
Maximum v/c Ratio: 0.79
Intersection Signal Delay: 46.1 — Intersection LOS: D
Intersection Capacity Utilization 78.3% — ICU Level of Service D
Analysis Period (min) 15

Splits and Phases: 15: Belle Terre Blvd/Belle Terre Pkwy & SR 100

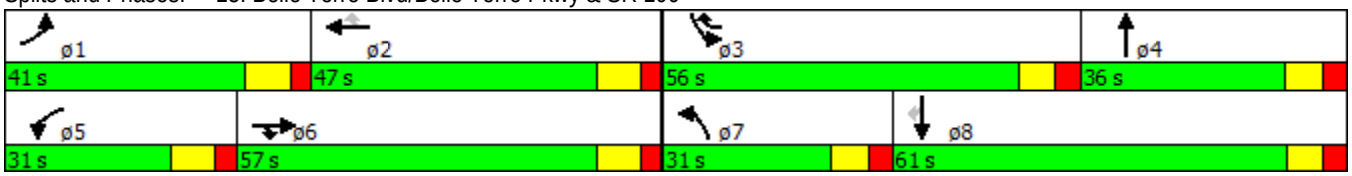

Intersection	
Int Delay, s/veh	0.4

Movement	EBL	EBR	NBL	NBT	SBT	SBR
Vol, veh/h	5	25	16	537	992	3
Conflicting Peds, #/hr	0	0	0	0	0	0
Sign Control	Stop	Stop	Free	Free	Free	Free
RT Channelized	-	None	-	None	-	None
Storage Length	0	-	380	-	-	-
Veh in Median Storage, #	1	-	-	0	0	-
Grade, %	0	-	-	0	0	-
Peak Hour Factor	85	85	85	85	85	85
Heavy Vehicles, %	0	4	13	8	2	0
Mvmt Flow	6	29	19	632	1167	4

Major/Minor	Minor2		Major1		Major2	
Conflicting Flow All	1523	585	1171	0	-	0
Stage 1	1169	-	-	-	-	-
Stage 2	354	-	-	-	-	-
Critical Hdwy	6.8	6.98	4.36	-	-	-
Critical Hdwy Stg 1	5.8	-	-	-	-	-
Critical Hdwy Stg 2	5.8	-	-	-	-	-
Follow-up Hdwy	3.5	3.34	2.33	-	-	-
Pot Cap-1 Maneuver	111	449	534	-	-	-
Stage 1	262	-	-	-	-	-
Stage 2	687	-	-	-	-	-
Platoon blocked, %				-	-	-
Mov Cap-1 Maneuver	107	449	534	-	-	-
Mov Cap-2 Maneuver	208	-	-	-	-	-
Stage 1	262	-	-	-	-	-
Stage 2	663	-	-	-	-	-

Approach	EB	NB	SB
HCM Control Delay, s	15.6	0.3	0
HCM LOS	C		

Minor Lane/Major Mvmt	NBL	NBT	EBLn1	SBT	SBR
Capacity (veh/h)	534	-	376	-	-
HCM Lane V/C Ratio	0.035	-	0.094	-	-
HCM Control Delay (s)	12	-	15.6	-	-
HCM Lane LOS	B	-	C	-	-
HCM 95th %tile Q(veh)	0.1	-	0.3	-	-

Intersection	
Int Delay, s/veh	0.9

Movement	EBL	EBT	EBR	WBL	WBT	WBR	NBL	NBT	NBR	SBL	SBT	SBR
Vol, veh/h	16	3	4	25	2	8	2	506	34	25	966	10
Conflicting Peds, #/hr	0	0	0	0	0	0	0	0	0	0	0	0
Sign Control	Stop	Stop	Stop	Stop	Stop	Stop	Free	Free	Free	Free	Free	Free
RT Channelized	-	-	None	-	-	None	-	-	None	-	-	None
Storage Length	-	-	-	300	-	-	350	-	250	400	-	-
Veh in Median Storage, #	-	1	-	-	1	-	-	0	-	-	0	-
Grade, %	-	0	-	-	0	-	-	0	-	-	0	-
Peak Hour Factor	86	86	86	86	86	86	86	86	86	86	86	86
Heavy Vehicles, %	7	0	0	4	0	38	0	6	24	4	4	0
Mvmt Flow	19	3	5	29	2	9	2	588	40	29	1123	12

Major/Minor	Minor2			Minor1			Major1			Major2		
Conflicting Flow All	1487	1780	567	1215	1786	294	1135	0	0	588	0	0
Stage 1	1187	1187	-	593	593	-	-	-	-	-	-	-
Stage 2	300	593	-	622	1193	-	-	-	-	-	-	-
Critical Hdwy	7.64	6.5	6.9	7.58	6.5	7.66	4.1	-	-	4.18	-	-
Critical Hdwy Stg 1	6.64	5.5	-	6.58	5.5	-	-	-	-	-	-	-
Critical Hdwy Stg 2	6.64	5.5	-	6.58	5.5	-	-	-	-	-	-	-
Follow-up Hdwy	3.57	4	3.3	3.54	4	3.68	2.2	-	-	2.24	-	-
Pot Cap-1 Maneuver	82	83	472	135	82	606	623	-	-	970	-	-
Stage 1	192	264	-	454	497	-	-	-	-	-	-	-
Stage 2	670	497	-	436	263	-	-	-	-	-	-	-
Platoon blocked, %								-	-		-	-
Mov Cap-1 Maneuver	78	80	472	128	79	606	623	-	-	970	-	-
Mov Cap-2 Maneuver	157	183	-	255	184	-	-	-	-	-	-	-
Stage 1	191	256	-	453	495	-	-	-	-	-	-	-
Stage 2	655	495	-	413	255	-	-	-	-	-	-	-

Approach	EB	WB	NB	SB
HCM Control Delay, s	28.3	18.9	0	0.2
HCM LOS	D	C		

Minor Lane/Major Mvmt	NBL	NBT	NBR	EBLn1	WBLn1	WBLn2	SBL	SBT	SBR
Capacity (veh/h)	623	-	-	181	255	415	970	-	-
HCM Lane V/C Ratio	0.004	-	-	0.148	0.114	0.028	0.03	-	-
HCM Control Delay (s)	10.8	-	-	28.3	20.9	13.9	8.8	-	-
HCM Lane LOS	B	-	-	D	C	B	A	-	-
HCM 95th %tile Q(veh)	0	-	-	0.5	0.4	0.1	0.1	-	-

Lane Group	EBL	EBT	EBR	WBL	WBT	WBR	NBL	NBT	NBR	SBL	SBT	SBR
Lane Configurations												
Volume (vph)	144	48	152	11	20	94	56	471	3	181	838	61
Ideal Flow (vphpl)	1900	1900	1900	1900	1900	1900	1900	1900	1900	1900	1900	1900
Lane Width (ft)	12	12	12	12	12	12	12	12	12	12	12	12
Grade (%)		0%			0%			0%			0%	
Storage Length (ft)	0		100	285		0	325		450	450		275
Storage Lanes	1		1	1		1	1		1	1		1
Taper Length (ft)	50			75			50			50		
Satd. Flow (prot)	1752	1671	0	1805	1900	1615	1656	3343	1615	1770	3471	1568
Flt Permitted	0.464			0.611			0.950			0.950		
Satd. Flow (perm)	856	1671	0	1161	1900	1615	1656	3343	1615	1770	3471	1568
Right Turn on Red			Yes			Yes			Yes			Yes
Satd. Flow (RTOR)		121				216			264			202
Link Speed (mph)		40			40			45			45	
Link Distance (ft)		664			1054			1578			2742	
Travel Time (s)		11.3			18.0			23.9			41.5	
Confl. Peds. (#/hr)												
Confl. Bikes (#/hr)												
Peak Hour Factor	0.84	0.84	0.84	0.84	0.84	0.84	0.84	0.84	0.84	0.84	0.84	0.84
Growth Factor	100%	100%	100%	100%	100%	100%	100%	100%	100%	100%	100%	100%
Heavy Vehicles (%)	3%	0%	1%	0%	0%	0%	9%	8%	0%	2%	4%	3%
Bus Blockages (#/hr)	0	0	0	0	0	0	0	0	0	0	0	0
Parking (#/hr)												
Mid-Block Traffic (%)		0%			0%			0%			0%	
Shared Lane Traffic (%)												
Lane Group Flow (vph)	171	238	0	13	24	112	67	561	4	215	998	73
Turn Type	pm+pt	NA		pm+pt	NA	Perm	Prot	NA	Perm	Prot	NA	Perm
Protected Phases	3	8		7	4		1	6		5	2	
Permitted Phases	8			4		4			6			2
Detector Phase	3	8		7	4	4	1	6	6	5	2	2
Switch Phase												
Minimum Initial (s)	5.0	5.0		5.0	5.0	5.0	5.0	15.0	15.0	5.0	15.0	15.0
Minimum Split (s)	11.4	11.4		21.6	41.6	41.6	11.8	21.8	21.8	11.8	29.8	29.8
Total Split (s)	12.0	32.0		21.6	41.6	41.6	15.0	38.4	38.4	28.0	51.4	51.4
Total Split (%)	10.0%	26.7%		18.0%	34.7%	34.7%	12.5%	32.0%	32.0%	23.3%	42.8%	42.8%
Maximum Green (s)	5.6	25.6		16.0	36.0	36.0	8.2	31.6	31.6	21.2	44.6	44.6
Yellow Time (s)	4.4	4.4		3.6	3.6	3.6	4.8	4.8	4.8	4.8	4.8	4.8
All-Red Time (s)	2.0	2.0		2.0	2.0	2.0	2.0	2.0	2.0	2.0	2.0	2.0
Lost Time Adjust (s)	0.0	0.0		0.0	0.0	0.0	0.0	0.0	0.0	0.0	0.0	0.0
Total Lost Time (s)	6.4	6.4		5.6	5.6	5.6	6.8	6.8	6.8	6.8	6.8	6.8
Lead/Lag	Lead	Lag		Lead	Lag	Lag	Lead	Lag	Lag	Lead	Lag	Lag
Lead-Lag Optimize?	Yes	Yes		Yes	Yes	Yes	Yes	Yes	Yes	Yes	Yes	Yes
Vehicle Extension (s)	3.0	3.0		3.0	3.0	3.0	3.0	3.0	3.0	3.0	3.0	3.0
Minimum Gap (s)	3.0	3.0		3.0	3.0	3.0	3.0	3.0	3.0	3.0	3.0	3.0
Time Before Reduce (s)	0.0	0.0		0.0	0.0	0.0	0.0	0.0	0.0	0.0	0.0	0.0
Time To Reduce (s)	0.0	0.0		0.0	0.0	0.0	0.0	0.0	0.0	0.0	0.0	0.0
Recall Mode	None	None		None	None	None	None	Min	Min	None	Min	Min
Walk Time (s)					7.0	7.0					7.0	7.0
Flash Dont Walk (s)					29.0	29.0					16.0	16.0

Lane Group	EBL	EBT	EBR	WBL	WBT	WBR	NBL	NBT	NBR	SBL	SBT	SBR
Pedestrian Calls (#/hr)					0	0					0	0
Act Effct Green (s)	16.3	15.5		13.5	8.8	8.8	7.9	22.2	22.2	15.2	33.4	33.4
Actuated g/C Ratio	0.21	0.20		0.18	0.12	0.12	0.10	0.29	0.29	0.20	0.44	0.44
v/c Ratio	0.67	0.54		0.05	0.11	0.30	0.39	0.57	0.01	0.61	0.65	0.09
Control Delay	41.8	20.5		24.2	34.2	2.0	45.0	27.2	0.0	38.5	21.9	0.2
Queue Delay	0.0	0.0		0.0	0.0	0.0	0.0	0.0	0.0	0.0	0.0	0.0
Total Delay	41.8	20.5		24.2	34.2	2.0	45.0	27.2	0.0	38.5	21.9	0.2
LOS	D	C		C	C	A	D	C	A	D	C	A
Approach Delay		29.4			9.1			28.9			23.5	
Approach LOS		C			A			C			C	

Intersection Summary	
Area Type: Other	
Cycle Length: 120	
Actuated Cycle Length: 76	
Natural Cycle: 95	
Control Type: Actuated-Uncoordinated	
Maximum v/c Ratio: 0.67	
Intersection Signal Delay: 25.0	Intersection LOS: C
Intersection Capacity Utilization 58.6%	ICU Level of Service B
Analysis Period (min) 15	

Splits and Phases: 18: Belle Terre Pkwy & Easthampton Blvd /Central Ave

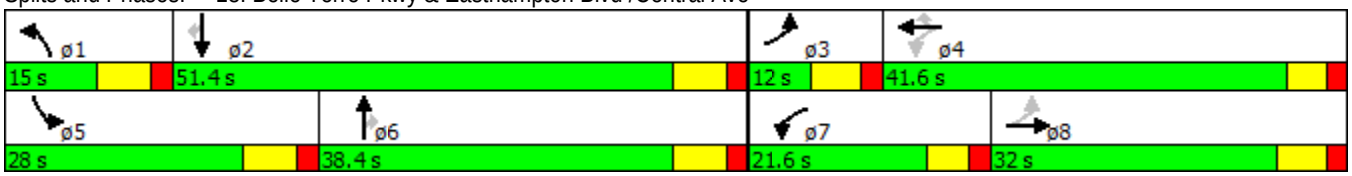

Lane Group	EBL	EBT	EBR	WBL	WBT	WBR	NBL	NBT	NBR	SBL	SBT	SBR
Lane Configurations												
Volume (vph)	25	94	143	79	90	153	121	533	55	360	858	45
Ideal Flow (vphpl)	1900	1900	1900	1900	1900	1900	1900	1900	1900	1900	1900	1900
Lane Width (ft)	12	12	12	12	12	12	12	12	12	12	12	12
Grade (%)		0%			0%			0%			0%	
Storage Length (ft)	300		0	250		0	350		0	350		0
Storage Lanes	1		0	1		0	1		0	1		0
Taper Length (ft)	50			50			50			50		
Satd. Flow (prot)	1805	1670	0	1805	1711	0	1736	3330	0	1787	3518	0
Flt Permitted	0.433			0.449			0.950			0.950		
Satd. Flow (perm)	823	1670	0	853	1711	0	1736	3330	0	1787	3518	0
Right Turn on Red			Yes			Yes			Yes			Yes
Satd. Flow (RTOR)		64			71			9			5	
Link Speed (mph)		55			55			45			45	
Link Distance (ft)		1429			1119			2742			1415	
Travel Time (s)		17.7			13.9			41.5			21.4	
Confl. Peds. (#/hr)												
Confl. Bikes (#/hr)												
Peak Hour Factor	0.93	0.93	0.93	0.93	0.93	0.93	0.93	0.93	0.93	0.93	0.93	0.93
Growth Factor	100%	100%	100%	100%	100%	100%	100%	100%	100%	100%	100%	100%
Heavy Vehicles (%)	0%	4%	3%	0%	0%	1%	4%	7%	6%	1%	2%	0%
Bus Blockages (#/hr)	0	0	0	0	0	0	0	0	0	0	0	0
Parking (#/hr)												
Mid-Block Traffic (%)		0%			0%			0%			0%	
Shared Lane Traffic (%)												
Lane Group Flow (vph)	27	255	0	85	262	0	130	632	0	387	971	0
Turn Type	Perm	NA		Perm	NA		Prot	NA		Prot	NA	
Protected Phases		4			8		5	2		1	6	
Permitted Phases	4			8								
Detector Phase	4	4		8	8		5	2		1	6	
Switch Phase												
Minimum Initial (s)	7.0	7.0		7.0	7.0		7.0	15.0		7.0	15.0	
Minimum Split (s)	41.0	41.0		39.0	39.0		13.8	33.8		13.8	33.8	
Total Split (s)	41.0	41.0		41.0	41.0		23.4	37.0		42.0	55.6	
Total Split (%)	34.2%	34.2%		34.2%	34.2%		19.5%	30.8%		35.0%	46.3%	
Maximum Green (s)	34.0	34.0		34.0	34.0		16.6	30.2		35.2	48.8	
Yellow Time (s)	5.0	5.0		5.0	5.0		4.8	4.8		4.8	4.8	
All-Red Time (s)	2.0	2.0		2.0	2.0		2.0	2.0		2.0	2.0	
Lost Time Adjust (s)	0.0	0.0		0.0	0.0		0.0	0.0		0.0	0.0	
Total Lost Time (s)	7.0	7.0		7.0	7.0		6.8	6.8		6.8	6.8	
Lead/Lag							Lead	Lag		Lead	Lag	
Lead-Lag Optimize?							Yes	Yes		Yes	Yes	
Vehicle Extension (s)	3.0	3.0		3.0	3.0		3.0	3.0		3.0	3.0	
Minimum Gap (s)	3.0	3.0		3.0	3.0		3.0	3.0		3.0	3.0	
Time Before Reduce (s)	0.0	0.0		0.0	0.0		0.0	0.0		0.0	0.0	
Time To Reduce (s)	0.0	0.0		0.0	0.0		0.0	0.0		0.0	0.0	
Recall Mode	None	None		None	None		None	Min		None	Min	
Walk Time (s)	7.0	7.0		5.0	5.0			7.0			7.0	
Flash Dont Walk (s)	27.0	27.0		27.0	27.0			20.0			20.0	

Lane Group	EBL	EBT	EBR	WBL	WBT	WBR	NBL	NBT	NBR	SBL	SBT	SBR
Pedestrian Calls (#/hr)	0	0		0	0			0			0	
Act Effct Green (s)	16.3	16.3		16.3	16.3		12.0	22.7		24.1	34.7	
Actuated g/C Ratio	0.19	0.19		0.19	0.19		0.14	0.27		0.28	0.41	
v/c Ratio	0.17	0.68		0.52	0.68		0.53	0.71		0.76	0.67	
Control Delay	35.0	35.4		46.2	34.1		46.2	34.2		39.9	23.5	
Queue Delay	0.0	0.0		0.0	0.0		0.0	0.0		0.0	0.0	
Total Delay	35.0	35.4		46.2	34.1		46.2	34.2		39.9	23.5	
LOS	D	D		D	C		D	C		D	C	
Approach Delay		35.4			37.1			36.2			28.2	
Approach LOS		D			D			D			C	

Intersection Summary

Area Type: Other
Cycle Length: 120
Actuated Cycle Length: 84.8
Natural Cycle: 100
Control Type: Actuated-Uncoordinated
Maximum v/c Ratio: 0.76
Intersection Signal Delay: 32.3 — Intersection LOS: C
Intersection Capacity Utilization 79.4% — ICU Level of Service D
Analysis Period (min) 15

Splits and Phases: 19: Belle Terre Pkwy & Royal Palms Pkwy

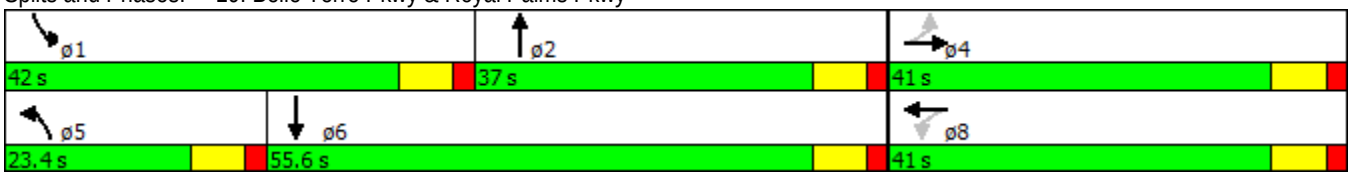

Intersection	
Int Delay, s/veh	1

Movement	WBL	WBR	NBT	NBR	SBL	SBT
Vol, veh/h	51	46	692	19	16	1212
Conflicting Peds, #/hr	0	0	0	0	0	0
Sign Control	Stop	Stop	Free	Free	Free	Free
RT Channelized	-	None	-	None	-	None
Storage Length	0	-	-	-	350	-
Veh in Median Storage, #	1	-	0	-	-	0
Grade, %	0	-	0	-	-	0
Peak Hour Factor	94	94	94	94	94	94
Heavy Vehicles, %	0	7	5	11	7	2
Mvmt Flow	54	49	736	20	17	1289

Major/Minor	Minor1		Major1		Major2	
Conflicting Flow All	1425	378	0	0	756	0
Stage 1	746	-	-	-	-	-
Stage 2	679	-	-	-	-	-
Critical Hdwy	6.8	7.04	-	-	4.24	-
Critical Hdwy Stg 1	5.8	-	-	-	-	-
Critical Hdwy Stg 2	5.8	-	-	-	-	-
Follow-up Hdwy	3.5	3.37	-	-	2.27	-
Pot Cap-1 Maneuver	129	606	-	-	818	-
Stage 1	435	-	-	-	-	-
Stage 2	471	-	-	-	-	-
Platoon blocked, %			-	-		-
Mov Cap-1 Maneuver	126	606	-	-	818	-
Mov Cap-2 Maneuver	262	-	-	-	-	-
Stage 1	435	-	-	-	-	-
Stage 2	461	-	-	-	-	-

Approach	WB	NB	SB
HCM Control Delay, s	19	0	0.1
HCM LOS	C		

Minor Lane/Major Mvmt	NBT	NBR	WBLn1	SBL	SBT
Capacity (veh/h)	-	-	359	818	-
HCM Lane V/C Ratio	-	-	0.287	0.021	-
HCM Control Delay (s)	-	-	19	9.5	-
HCM Lane LOS	-	-	C	A	-
HCM 95th %tile Q(veh)	-	-	1.2	0.1	-

Lane Group	EBL	EBR	NBL	NBT	SBT	SBR
Lane Configurations						
Volume (vph)	137	320	132	606	908	66
Ideal Flow (vphpl)	1900	1900	1900	1900	1900	1900
Lane Width (ft)	12	12	12	12	12	12
Grade (%)	0%			0%	0%	
Storage Length (ft)	250	0	350			200
Storage Lanes	1	1	1			1
Taper Length (ft)	50		50			
Satd. Flow (prot)	1719	1599	1671	3438	3539	1538
Flt Permitted	0.950		0.159			
Satd. Flow (perm)	1719	1599	280	3438	3539	1538
Right Turn on Red		Yes				Yes
Satd. Flow (RTOR)		319				67
Link Speed (mph)	45			45	45	
Link Distance (ft)	1554			1428	1580	
Travel Time (s)	23.5			21.6	23.9	
Confl. Peds. (#/hr)						
Confl. Bikes (#/hr)						
Peak Hour Factor	0.93	0.93	0.93	0.93	0.93	0.93
Growth Factor	100%	100%	100%	100%	100%	100%
Heavy Vehicles (%)	5%	1%	8%	5%	2%	5%
Bus Blockages (#/hr)	0	0	0	0	0	0
Parking (#/hr)						
Mid-Block Traffic (%)	0%			0%	0%	
Shared Lane Traffic (%)						
Lane Group Flow (vph)	147	344	142	652	976	71
Turn Type	Prot	Prot	pm+pt	NA	NA	Perm
Protected Phases	8	8	1	6	2	
Permitted Phases			6			2
Detector Phase	8	8	1	6	2	2
Switch Phase						
Minimum Initial (s)	6.0	6.0	6.0	15.0	15.0	15.0
Minimum Split (s)	33.8	33.8	13.0	22.0	30.0	30.0
Total Split (s)	35.0	35.0	25.0	85.0	60.0	60.0
Total Split (%)	29.2%	29.2%	20.8%	70.8%	50.0%	50.0%
Maximum Green (s)	28.2	28.2	18.0	78.0	53.0	53.0
Yellow Time (s)	4.8	4.8	4.8	4.8	4.8	4.8
All-Red Time (s)	2.0	2.0	2.2	2.2	2.2	2.2
Lost Time Adjust (s)	0.0	0.0	0.0	0.0	0.0	0.0
Total Lost Time (s)	6.8	6.8	7.0	7.0	7.0	7.0
Lead/Lag			Lead		Lag	Lag
Lead-Lag Optimize?			Yes		Yes	Yes
Vehicle Extension (s)	3.0	3.0	3.0	3.5	3.5	3.5
Minimum Gap (s)	3.0	3.0	3.0	3.0	3.0	3.0
Time Before Reduce (s)	0.0	0.0	0.0	0.0	0.0	0.0
Time To Reduce (s)	0.0	0.0	0.0	0.0	0.0	0.0
Recall Mode	None	None	None	Min	Min	Min
Walk Time (s)	7.0	7.0			5.0	5.0
Flash Dont Walk (s)	20.0	20.0			18.0	18.0

Lane Group	EBL	EBR	NBL	NBT	SBT	SBR
Pedestrian Calls (#/hr)	0	0			0	0
Act Effct Green (s)	12.2	12.2	44.2	44.2	28.6	28.6
Actuated g/C Ratio	0.17	0.17	0.63	0.63	0.40	0.40
v/c Ratio	0.49	0.64	0.42	0.30	0.68	0.11
Control Delay	34.8	11.1	9.6	6.7	20.1	4.7
Queue Delay	0.0	0.0	0.0	0.0	0.0	0.0
Total Delay	34.8	11.1	9.6	6.7	20.1	4.7
LOS	C	B	A	A	C	A
Approach Delay	18.2			7.2	19.1	
Approach LOS	B			A	B	

Intersection Summary	
Area Type: Other	
Cycle Length: 120	
Actuated Cycle Length: 70.7	
Natural Cycle: 80	
Control Type: Actuated-Uncoordinated	
Maximum v/c Ratio: 0.68	
Intersection Signal Delay: 14.8	Intersection LOS: B
Intersection Capacity Utilization 57.3%	ICU Level of Service B
Analysis Period (min) 15	

Splits and Phases: 21: Belle Terre Pkwy & Rymfire Dr

Intersection	
Int Delay, s/veh	1.3

Movement	WBL	WBR	NBT	NBR	SBL	SBT
Vol, veh/h	36	90	728	15	35	938
Conflicting Peds, #/hr	0	0	0	0	0	0
Sign Control	Stop	Stop	Free	Free	Free	Free
RT Channelized	-	None	-	None	-	None
Storage Length	0	-	-	-	350	-
Veh in Median Storage, #	1	-	0	-	-	0
Grade, %	0	-	0	-	-	0
Peak Hour Factor	94	94	94	94	94	94
Heavy Vehicles, %	3	3	4	29	0	3
Mvmt Flow	38	96	774	16	37	998

Major/Minor	Minor1		Major1		Major2	
Conflicting Flow All	1355	395	0	0	790	0
Stage 1	782	-	-	-	-	-
Stage 2	573	-	-	-	-	-
Critical Hdwy	6.86	6.96	-	-	4.1	-
Critical Hdwy Stg 1	5.86	-	-	-	-	-
Critical Hdwy Stg 2	5.86	-	-	-	-	-
Follow-up Hdwy	3.53	3.33	-	-	2.2	-
Pot Cap-1 Maneuver	139	601	-	-	839	-
Stage 1	409	-	-	-	-	-
Stage 2	525	-	-	-	-	-
Platoon blocked, %			-	-		-
Mov Cap-1 Maneuver	133	601	-	-	839	-
Mov Cap-2 Maneuver	266	-	-	-	-	-
Stage 1	409	-	-	-	-	-
Stage 2	502	-	-	-	-	-

Approach	WB	NB	SB
HCM Control Delay, s	16.7	0	0.3
HCM LOS	C		

Minor Lane/Major Mvmt	NBT	NBR	WBLn1	SBL	SBT
Capacity (veh/h)	-	-	442	839	-
HCM Lane V/C Ratio	-	-	0.303	0.044	-
HCM Control Delay (s)	-	-	16.7	9.5	-
HCM Lane LOS	-	-	C	A	-
HCM 95th %tile Q(veh)	-	-	1.3	0.1	-

Intersection	
Int Delay, s/veh	3.5

Movement	WBL	WBR	NBT	NBR	SBL	SBT
Vol, veh/h	113	102	752	66	34	860
Conflicting Peds, #/hr	0	0	0	0	0	0
Sign Control	Stop	Stop	Free	Free	Free	Free
RT Channelized	-	None	-	None	-	None
Storage Length	0	-	-	-	350	-
Veh in Median Storage, #	1	-	0	-	-	0
Grade, %	0	-	0	-	-	0
Peak Hour Factor	96	96	96	96	96	96
Heavy Vehicles, %	1	3	4	11	0	3
Mvmt Flow	118	106	783	69	35	896

Major/Minor	Minor1		Major1		Major2	
Conflicting Flow All	1337	426	0	0	852	0
Stage 1	818	-	-	-	-	-
Stage 2	519	-	-	-	-	-
Critical Hdwy	6.82	6.96	-	-	4.1	-
Critical Hdwy Stg 1	5.82	-	-	-	-	-
Critical Hdwy Stg 2	5.82	-	-	-	-	-
Follow-up Hdwy	3.51	3.33	-	-	2.2	-
Pot Cap-1 Maneuver	146	574	-	-	795	-
Stage 1	397	-	-	-	-	-
Stage 2	565	-	-	-	-	-
Platoon blocked, %			-	-		-
Mov Cap-1 Maneuver	140	574	-	-	795	-
Mov Cap-2 Maneuver	271	-	-	-	-	-
Stage 1	397	-	-	-	-	-
Stage 2	540	-	-	-	-	-

Approach	WB	NB	SB
HCM Control Delay, s	29.8	0	0.4
HCM LOS	D		

Minor Lane/Major Mvmt	NBT	NBR	WBLn1	SBL	SBT
Capacity (veh/h)	-	-	362	795	-
HCM Lane V/C Ratio	-	-	0.619	0.045	-
HCM Control Delay (s)	-	-	29.8	9.7	-
HCM Lane LOS	-	-	D	A	-
HCM 95th %tile Q(veh)	-	-	4	0.1	-

Lane Group	EBL	EBT	EBR	WBL	WBT	WBR	NBL	NBT	NBR	SBL	SBT	SBR
Lane Configurations												
Volume (vph)	122	11	131	118	68	93	119	694	41	44	645	90
Ideal Flow (vphpl)	1900	1900	1900	1900	1900	1900	1900	1900	1900	1900	1900	1900
Lane Width (ft)	12	12	12	12	12	12	12	12	12	12	12	12
Grade (%)		0%			0%			0%			0%	
Storage Length (ft)	325		0	225		0	350		325	250		325
Storage Lanes	1		0	1		0	1		1	1		1
Taper Length (ft)	50			50			50			50		
Satd. Flow (prot)	1752	1638	0	1787	1682	0	1752	3505	1495	1719	3471	1583
Flt Permitted	0.650			0.662			0.950			0.950		
Satd. Flow (perm)	1199	1638	0	1245	1682	0	1752	3505	1495	1719	3471	1583
Right Turn on Red			Yes			Yes			Yes			Yes
Satd. Flow (RTOR)		138			58				89			151
Link Speed (mph)		55			45			45			45	
Link Distance (ft)		1756			1701			1132			1277	
Travel Time (s)		21.8			25.8			17.2			19.3	
Confl. Peds. (#/hr)												
Confl. Bikes (#/hr)												
Peak Hour Factor	0.95	0.95	0.95	0.95	0.95	0.95	0.95	0.95	0.95	0.95	0.95	0.95
Growth Factor	100%	100%	100%	100%	100%	100%	100%	100%	100%	100%	100%	100%
Heavy Vehicles (%)	3%	0%	0%	1%	5%	2%	3%	3%	8%	5%	4%	2%
Bus Blockages (#/hr)	0	0	0	0	0	0	0	0	0	0	0	0
Parking (#/hr)												
Mid-Block Traffic (%)		0%			0%			0%			0%	
Shared Lane Traffic (%)												
Lane Group Flow (vph)	128	150	0	124	170	0	125	731	43	46	679	95
Turn Type	Perm	NA		Perm	NA		Prot	NA	Perm	Prot	NA	Perm
Protected Phases		8			4		5	2		1	6	
Permitted Phases	8			4					2			6
Detector Phase	8	8		4	4		5	2	2	1	6	6
Switch Phase												
Minimum Initial (s)	5.0	5.0		5.0	5.0		9.0	17.0	17.0	9.0	17.0	17.0
Minimum Split (s)	33.0	33.0		11.0	11.0		15.8	33.8	33.8	15.8	33.8	33.8
Total Split (s)	42.0	42.0		42.0	42.0		30.0	58.0	58.0	20.0	48.0	48.0
Total Split (%)	35.0%	35.0%		35.0%	35.0%		25.0%	48.3%	48.3%	16.7%	40.0%	40.0%
Maximum Green (s)	36.0	36.0		36.0	36.0		23.2	51.2	51.2	13.2	41.2	41.2
Yellow Time (s)	4.0	4.0		4.0	4.0		4.8	4.8	4.8	4.8	4.8	4.8
All-Red Time (s)	2.0	2.0		2.0	2.0		2.0	2.0	2.0	2.0	2.0	2.0
Lost Time Adjust (s)	0.0	0.0		0.0	0.0		0.0	0.0	0.0	0.0	0.0	0.0
Total Lost Time (s)	6.0	6.0		6.0	6.0		6.8	6.8	6.8	6.8	6.8	6.8
Lead/Lag							Lead	Lag	Lag	Lead	Lag	Lag
Lead-Lag Optimize?							Yes	Yes	Yes	Yes	Yes	Yes
Vehicle Extension (s)	3.0	3.0		3.0	3.0		3.0	3.0	3.0	3.0	3.0	3.0
Minimum Gap (s)	3.0	3.0		3.0	3.0		3.0	3.0	3.0	3.0	3.0	3.0
Time Before Reduce (s)	0.0	0.0		0.0	0.0		0.0	0.0	0.0	0.0	0.0	0.0
Time To Reduce (s)	0.0	0.0		0.0	0.0		0.0	0.0	0.0	0.0	0.0	0.0
Recall Mode	None	None		None	None		None	Min	Min	None	Min	Min
Walk Time (s)	7.0	7.0						7.0	7.0		7.0	7.0
Flash Dont Walk (s)	20.0	20.0						20.0	20.0		20.0	20.0

Lane Group	EBL	EBT	EBR	WBL	WBT	WBR	NBL	NBT	NBR	SBL	SBT	SBR
Pedestrian Calls (#/hr)	0	0						0	0		0	0
Act Effct Green (s)	14.1	14.1		14.1	14.1		11.8	27.5	27.5	10.0	22.1	22.1
Actuated g/C Ratio	0.22	0.22		0.22	0.22		0.18	0.43	0.43	0.16	0.35	0.35
v/c Ratio	0.48	0.32		0.45	0.41		0.39	0.49	0.06	0.17	0.57	0.15
Control Delay	31.7	8.2		30.5	20.0		31.6	16.8	0.7	32.0	21.5	1.5
Queue Delay	0.0	0.0		0.0	0.0		0.0	0.0	0.0	0.0	0.0	0.0
Total Delay	31.7	8.2		30.5	20.0		31.6	16.8	0.7	32.0	21.5	1.5
LOS	C	A		C	B		C	B	A	C	C	A
Approach Delay		19.1			24.4			18.1			19.8	
Approach LOS		B			C			B			B	

Intersection Summary	
Area Type: Other	
Cycle Length: 120	
Actuated Cycle Length: 63.9	
Natural Cycle: 85	
Control Type: Actuated-Uncoordinated	
Maximum v/c Ratio: 0.57	
Intersection Signal Delay: 19.6	Intersection LOS: B
Intersection Capacity Utilization 64.1%	ICU Level of Service C
Analysis Period (min) 15	

Splits and Phases: 24: Belle Terre Pkwy & Whiteview Pkwy

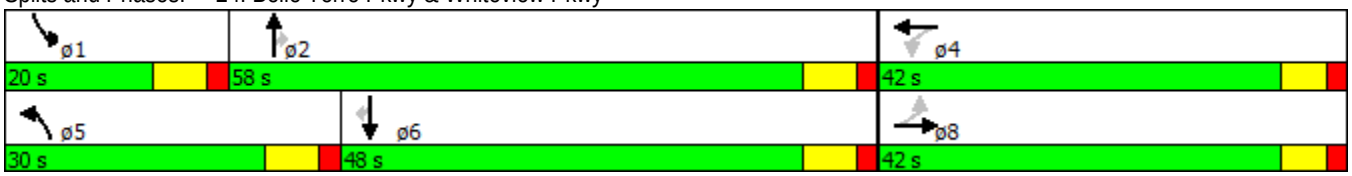

Intersection	
Int Delay, s/veh	1.3

Movement	EBL	EBR	NBL	NBT	SBT	SBR
Vol, veh/h	57	44	30	879	735	40
Conflicting Peds, #/hr	0	0	0	0	0	0
Sign Control	Stop	Stop	Free	Free	Free	Free
RT Channelized	-	None	-	None	-	None
Storage Length	0	-	175	-	-	-
Veh in Median Storage, #	1	-	-	0	0	-
Grade, %	0	-	-	0	0	-
Peak Hour Factor	93	93	93	93	93	93
Heavy Vehicles, %	2	0	3	3	4	3
Mvmt Flow	61	47	32	945	790	43

Major/Minor	Minor2		Major1		Major2	
Conflicting Flow All	1349	417	833	0	-	0
Stage 1	812	-	-	-	-	-
Stage 2	537	-	-	-	-	-
Critical Hdwy	6.84	6.9	4.16	-	-	-
Critical Hdwy Stg 1	5.84	-	-	-	-	-
Critical Hdwy Stg 2	5.84	-	-	-	-	-
Follow-up Hdwy	3.52	3.3	2.23	-	-	-
Pot Cap-1 Maneuver	142	590	789	-	-	-
Stage 1	397	-	-	-	-	-
Stage 2	550	-	-	-	-	-
Platoon blocked, %				-	-	-
Mov Cap-1 Maneuver	136	590	789	-	-	-
Mov Cap-2 Maneuver	267	-	-	-	-	-
Stage 1	397	-	-	-	-	-
Stage 2	528	-	-	-	-	-

Approach	EB	NB	SB
HCM Control Delay, s	19.8	0.3	0
HCM LOS	C		

Minor Lane/Major Mvmt	NBL	NBT	EBLn1	SBT	SBR
Capacity (veh/h)	789	-	351	-	-
HCM Lane V/C Ratio	0.041	-	0.309	-	-
HCM Control Delay (s)	9.8	-	19.8	-	-
HCM Lane LOS	A	-	C	-	-
HCM 95th %tile Q(veh)	0.1	-	1.3	-	-

Intersection	
Int Delay, s/veh	2.4

Movement	WBL	WBR	NBT	NBR	SBL	SBT
Vol, veh/h	43	129	911	25	51	732
Conflicting Peds, #/hr	0	0	0	0	0	0
Sign Control	Stop	Stop	Free	Free	Free	Free
RT Channelized	-	None	-	None	-	None
Storage Length	0	-	-	-	175	-
Veh in Median Storage, #	1	-	0	-	-	0
Grade, %	0	-	0	-	-	0
Peak Hour Factor	91	91	91	91	91	91
Heavy Vehicles, %	2	4	3	4	4	5
Mvmt Flow	47	142	1001	27	56	804

Major/Minor	Minor1		Major1		Major2	
Conflicting Flow All	1529	514	0	0	1029	0
Stage 1	1015	-	-	-	-	-
Stage 2	514	-	-	-	-	-
Critical Hdwy	6.84	6.98	-	-	4.18	-
Critical Hdwy Stg 1	5.84	-	-	-	-	-
Critical Hdwy Stg 2	5.84	-	-	-	-	-
Follow-up Hdwy	3.52	3.34	-	-	2.24	-
Pot Cap-1 Maneuver	108	500	-	-	659	-
Stage 1	311	-	-	-	-	-
Stage 2	565	-	-	-	-	-
Platoon blocked, %			-	-		-
Mov Cap-1 Maneuver	99	500	-	-	659	-
Mov Cap-2 Maneuver	219	-	-	-	-	-
Stage 1	311	-	-	-	-	-
Stage 2	517	-	-	-	-	-

Approach	WB	NB	SB
HCM Control Delay, s	23.6	0	0.7
HCM LOS	C		

Minor Lane/Major Mvmt	NBT	NBR	WBLn1	SBL	SBT
Capacity (veh/h)	-	-	379	659	-
HCM Lane V/C Ratio	-	-	0.499	0.085	-
HCM Control Delay (s)	-	-	23.6	11	-
HCM Lane LOS	-	-	C	B	-
HCM 95th %tile Q(veh)	-	-	2.7	0.3	-

Lane Group	WBL	WBR	NBT	NBR	SBL	SBT
Lane Configurations						
Volume (vph)	22	10	1017	23	151	761
Ideal Flow (vphpl)	1900	1900	1900	1900	1900	1900
Lane Width (ft)	12	12	12	12	12	12
Grade (%)	0%		0%			0%
Storage Length (ft)	0	0		390	500	
Storage Lanes	1	1		1	1	
Taper Length (ft)	25				50	
Satd. Flow (prot)	1188	1468	3539	1369	1752	3505
Flt Permitted	0.950				0.140	
Satd. Flow (perm)	1188	1468	3539	1369	258	3505
Right Turn on Red		Yes		Yes		
Satd. Flow (RTOR)		11		26		
Link Speed (mph)	30		45			45
Link Distance (ft)	362		2373			662
Travel Time (s)	8.2		36.0			10.0
Confl. Peds. (#/hr)						
Confl. Bikes (#/hr)						
Peak Hour Factor	0.89	0.89	0.89	0.89	0.89	0.89
Growth Factor	100%	100%	100%	100%	100%	100%
Heavy Vehicles (%)	52%	10%	2%	18%	3%	3%
Bus Blockages (#/hr)	0	0	0	0	0	0
Parking (#/hr)						
Mid-Block Traffic (%)	0%		0%			0%
Shared Lane Traffic (%)						
Lane Group Flow (vph)	25	11	1143	26	170	855
Turn Type	Prot	Prot	NA	Perm	pm+pt	NA
Protected Phases	4	4	6		5	2
Permitted Phases				6	2	
Detector Phase	4	4	6	6	5	2
Switch Phase						
Minimum Initial (s)	12.0	12.0	15.0	15.0	4.0	15.0
Minimum Split (s)	47.0	47.0	35.0	35.0	9.0	20.0
Total Split (s)	47.0	47.0	49.0	49.0	14.0	63.0
Total Split (%)	42.7%	42.7%	44.5%	44.5%	12.7%	57.3%
Maximum Green (s)	42.0	42.0	44.0	44.0	9.0	58.0
Yellow Time (s)	4.0	4.0	4.0	4.0	4.0	4.0
All-Red Time (s)	1.0	1.0	1.0	1.0	1.0	1.0
Lost Time Adjust (s)	0.0	0.0	0.0	0.0	0.0	0.0
Total Lost Time (s)	5.0	5.0	5.0	5.0	5.0	5.0
Lead/Lag			Lag	Lag	Lead	
Lead-Lag Optimize?			Yes	Yes	Yes	
Vehicle Extension (s)	5.0	5.0	3.0	3.0	3.0	3.0
Minimum Gap (s)	3.0	3.0	3.0	3.0	3.0	3.0
Time Before Reduce (s)	0.0	0.0	0.0	0.0	0.0	0.0
Time To Reduce (s)	0.0	0.0	0.0	0.0	0.0	0.0
Recall Mode	None	None	Min	Min	None	Min
Walk Time (s)	12.0	12.0	20.0	20.0		
Flash Dont Walk (s)	30.0	30.0	10.0	10.0		

Lane Group	WBL	WBR	NBT	NBR	SBL	SBT
Pedestrian Calls (#/hr)	0	0	0	0		
Act Effct Green (s)	13.0	13.0	26.9	26.9	42.1	46.0
Actuated g/C Ratio	0.25	0.25	0.51	0.51	0.80	0.87
v/c Ratio	0.09	0.03	0.63	0.04	0.35	0.28
Control Delay	23.5	14.4	12.2	4.3	5.7	2.7
Queue Delay	0.0	0.0	0.0	0.0	0.0	0.0
Total Delay	23.5	14.4	12.2	4.3	5.7	2.7
LOS	C	B	B	A	A	A
Approach Delay	20.7		12.0			3.2
Approach LOS	C		B			A

Intersection Summary	
Area Type: Other	
Cycle Length: 110	
Actuated Cycle Length: 52.6	
Natural Cycle: 95	
Control Type: Actuated-Uncoordinated	
Maximum v/c Ratio: 0.63	
Intersection Signal Delay: 8.1	Intersection LOS: A
Intersection Capacity Utilization 59.0%	ICU Level of Service B
Analysis Period (min) 15	

Splits and Phases: 27: Belle Terre Pkwy & School Entrance

Lane Group	WBL	WBR	NBT	NBR	SBL	SBT	ø4
Lane Configurations							
Volume (vph)	266	210	952	75	49	646	
Ideal Flow (vphpl)	1900	1900	1900	1900	1900	1900	
Lane Width (ft)	12	12	12	12	12	12	
Grade (%)	0%		0%			0%	
Storage Length (ft)	275	0		0	175		
Storage Lanes	1	1		0	1		
Taper Length (ft)	25				50		
Satd. Flow (prot)	1752	1615	3457	0	1703	3505	
Flt Permitted	0.950				0.127		
Satd. Flow (perm)	1752	1615	3457	0	228	3505	
Right Turn on Red		Yes		Yes			
Satd. Flow (RTOR)		250	7				
Link Speed (mph)	30		45			45	
Link Distance (ft)	890		234			3685	
Travel Time (s)	20.2		3.5			55.8	
Confl. Peds. (#/hr)							
Confl. Bikes (#/hr)							
Peak Hour Factor	0.84	0.84	0.84	0.84	0.84	0.84	
Growth Factor	100%	100%	100%	100%	100%	100%	
Heavy Vehicles (%)	3%	0%	3%	7%	6%	3%	
Bus Blockages (#/hr)	0	0	0	0	0	0	
Parking (#/hr)							
Mid-Block Traffic (%)	0%		0%			0%	
Shared Lane Traffic (%)							
Lane Group Flow (vph)	317	250	1222	0	58	769	
Turn Type	Prot	Prot	NA		pm+pt	NA	
Protected Phases	3	3	6		5	2	4
Permitted Phases					2		
Detector Phase	3	3	6		5	2	
Switch Phase							
Minimum Initial (s)	4.0	4.0	10.0		4.0	10.0	1.0
Minimum Split (s)	9.0	9.0	47.0		8.0	15.0	47.0
Total Split (s)	28.0	28.0	47.0		8.0	55.0	47.0
Total Split (%)	21.5%	21.5%	36.2%		6.2%	42.3%	36%
Maximum Green (s)	23.0	23.0	42.0		4.0	50.0	42.0
Yellow Time (s)	4.0	4.0	4.0		3.0	4.0	4.0
All-Red Time (s)	1.0	1.0	1.0		1.0	1.0	1.0
Lost Time Adjust (s)	0.0	0.0	0.0		0.0	0.0	
Total Lost Time (s)	5.0	5.0	5.0		4.0	5.0	
Lead/Lag	Lead	Lead	Lag		Lead		Lag
Lead-Lag Optimize?	Yes	Yes	Yes		Yes		Yes
Vehicle Extension (s)	3.0	3.0	3.0		3.0	3.0	0.2
Minimum Gap (s)	3.0	3.0	3.0		3.0	3.0	3.0
Time Before Reduce (s)	0.0	0.0	0.0		0.0	0.0	0.0
Time To Reduce (s)	0.0	0.0	0.0		0.0	0.0	0.0
Recall Mode	None	None	Max		None	Max	None
Walk Time (s)			12.0				12.0
Flash Dont Walk (s)			30.0				30.0

Lane Group	WBL	WBR	NBT	NBR	SBL	SBT	ø4
Pedestrian Calls (#/hr)			0				0
Act Effct Green (s)	23.0	23.0	43.6		51.0	50.0	
Actuated g/C Ratio	0.28	0.28	0.53		0.61	0.60	
v/c Ratio	0.65	0.40	0.67		0.27	0.36	
Control Delay	33.9	5.4	17.2		9.7	9.0	
Queue Delay	0.0	0.0	0.0		0.0	0.0	
Total Delay	33.9	5.4	17.2		9.7	9.0	
LOS	C	A	B		A	A	
Approach Delay	21.4		17.2			9.1	
Approach LOS	C		B			A	

Intersection Summary	
Area Type: Other	
Cycle Length: 130	
Actuated Cycle Length: 83	
Natural Cycle: 135	
Control Type: Semi Act-Uncoord	
Maximum v/c Ratio: 0.67	
Intersection Signal Delay: 15.5	Intersection LOS: B
Intersection Capacity Utilization 58.4%	ICU Level of Service B
Analysis Period (min) 15	

Splits and Phases: 28: Belle Terre Pkwy & Parkview Dr (S)

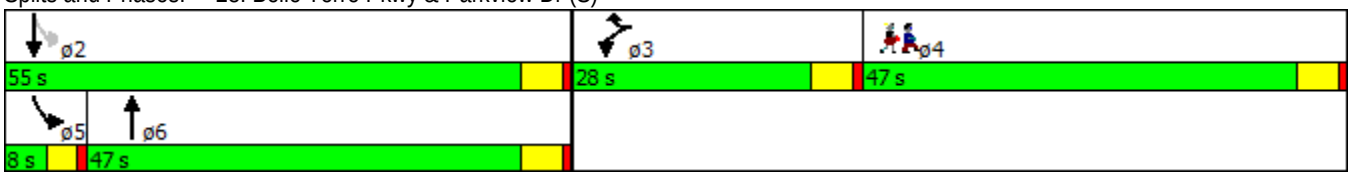

Intersection	
Int Delay, s/veh	2.6

Movement	SEL	SET	NWT	NWR	SWL	SWR
Vol, veh/h	78	668	1146	16	27	120
Conflicting Peds, #/hr	0	0	0	0	0	0
Sign Control	Free	Free	Free	Free	Stop	Stop
RT Channelized	-	None	-	None	-	None
Storage Length	450	-	-	425	0	-
Veh in Median Storage, #	-	0	0	-	1	-
Grade, %	-	0	0	-	0	-
Peak Hour Factor	87	87	87	87	87	87
Heavy Vehicles, %	5	3	2	0	0	1
Mvmt Flow	90	768	1317	18	31	138

Major/Minor	Major1		Major2		Minor2	
Conflicting Flow All	1317	0	-	0	1880	659
Stage 1	-	-	-	-	1317	-
Stage 2	-	-	-	-	563	-
Critical Hdwy	4.2	-	-	-	6.8	6.92
Critical Hdwy Stg 1	-	-	-	-	5.8	-
Critical Hdwy Stg 2	-	-	-	-	5.8	-
Follow-up Hdwy	2.25	-	-	-	3.5	3.31
Pot Cap-1 Maneuver	505	-	-	-	64	409
Stage 1	-	-	-	-	219	-
Stage 2	-	-	-	-	539	-
Platoon blocked, %		-	-	-		
Mov Cap-1 Maneuver	505	-	-	-	53	409
Mov Cap-2 Maneuver	-	-	-	-	155	-
Stage 1	-	-	-	-	219	-
Stage 2	-	-	-	-	443	-

Approach	SE	NW	SW
HCM Control Delay, s	1.4	0	29.1
HCM LOS			D

Minor Lane/Major Mvmt	NWT	NWR	SEL	SET	SWLn1
Capacity (veh/h)	-	-	505	-	314
HCM Lane V/C Ratio	-	-	0.178	-	0.538
HCM Control Delay (s)	-	-	13.7	-	29.1
HCM Lane LOS	-	-	B	-	D
HCM 95th %tile Q(veh)	-	-	0.6	-	3

Lane Group	SET	SER	NWL	NWT	NEL	NER
Lane Configurations						
Volume (vph)	645	168	79	1187	417	101
Ideal Flow (vphpl)	1900	1900	1900	1900	1900	1900
Lane Width (ft)	12	12	12	12	12	12
Grade (%)	0%			0%	0%	
Storage Length (ft)		325	175		225	225
Storage Lanes		1	1		1	1
Taper Length (ft)			100		100	
Satd. Flow (prot)	3505	1583	1671	3539	3467	1568
Flt Permitted			0.234		0.950	
Satd. Flow (perm)	3505	1583	412	3539	3467	1568
Right Turn on Red		Yes				Yes
Satd. Flow (RTOR)		191				115
Link Speed (mph)	45			45	45	
Link Distance (ft)	1316			361	1297	
Travel Time (s)	19.9			5.5	19.7	
Confl. Peds. (#/hr)						
Confl. Bikes (#/hr)						
Peak Hour Factor	0.88	0.88	0.88	0.88	0.88	0.88
Growth Factor	100%	100%	100%	100%	100%	100%
Heavy Vehicles (%)	3%	2%	8%	2%	1%	3%
Bus Blockages (#/hr)	0	0	0	0	0	0
Parking (#/hr)						
Mid-Block Traffic (%)	0%			0%	0%	
Shared Lane Traffic (%)						
Lane Group Flow (vph)	733	191	90	1349	474	115
Turn Type	NA	Perm	pm+pt	NA	Prot	Prot
Protected Phases	6		5	2	4	4
Permitted Phases		6	2			
Detector Phase	6	6	5	2	4	4
Switch Phase						
Minimum Initial (s)	20.0	20.0	4.0	20.0	6.0	6.0
Minimum Split (s)	26.8	26.8	11.0	27.0	31.8	31.8
Total Split (s)	39.0	39.0	15.0	54.0	36.0	36.0
Total Split (%)	43.3%	43.3%	16.7%	60.0%	40.0%	40.0%
Maximum Green (s)	32.2	32.2	8.0	47.0	29.2	29.2
Yellow Time (s)	4.8	4.8	4.8	4.8	4.8	4.8
All-Red Time (s)	2.0	2.0	2.2	2.2	2.0	2.0
Lost Time Adjust (s)	0.0	0.0	0.0	0.0	0.0	0.0
Total Lost Time (s)	6.8	6.8	7.0	7.0	6.8	6.8
Lead/Lag	Lag	Lag	Lead			
Lead-Lag Optimize?	Yes	Yes	Yes			
Vehicle Extension (s)	3.0	3.0	3.0	3.0	3.0	3.0
Minimum Gap (s)	3.0	3.0	3.0	3.0	3.0	3.0
Time Before Reduce (s)	0.0	0.0	0.0	0.0	0.0	0.0
Time To Reduce (s)	0.0	0.0	0.0	0.0	0.0	0.0
Recall Mode	Min	Min	None	Min	None	None
Walk Time (s)	5.0	5.0			10.0	10.0
Flash Dont Walk (s)	14.0	14.0			15.0	15.0

Lane Group	SET	SER	NWL	NWT	NEL	NER
Pedestrian Calls (#/hr)	0	0			0	0
Act Effct Green (s)	23.6	23.6	34.4	34.4	14.6	14.6
Actuated g/C Ratio	0.37	0.37	0.54	0.54	0.23	0.23
v/c Ratio	0.56	0.27	0.24	0.70	0.59	0.26
Control Delay	19.3	3.9	9.0	13.1	26.3	6.9
Queue Delay	0.0	0.0	0.0	0.0	0.0	0.0
Total Delay	19.3	3.9	9.0	13.1	26.3	6.9
LOS	B	A	A	B	C	A
Approach Delay	16.1			12.9	22.5	
Approach LOS	B			B	C	

Intersection Summary	
Area Type: Other	
Cycle Length: 90	
Actuated Cycle Length: 63.4	
Natural Cycle: 70	
Control Type: Actuated-Uncoordinated	
Maximum v/c Ratio: 0.70	
Intersection Signal Delay: 15.8	Intersection LOS: B
Intersection Capacity Utilization 56.2%	ICU Level of Service B
Analysis Period (min) 15	

Splits and Phases: 30: Pine Lakes Pkwy & Belle Terre Pkwy

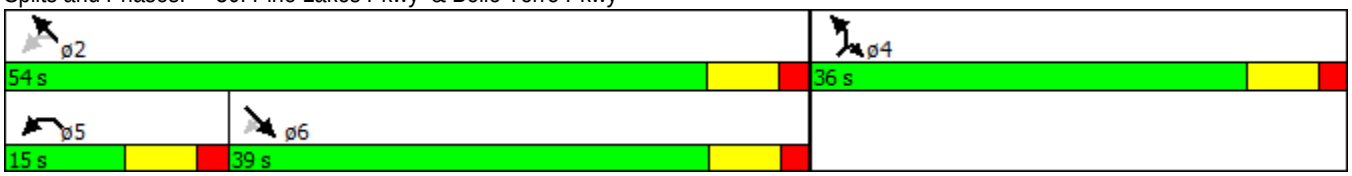

Lane Group	WBL	WBR	NBT	NBR	SBL	SBT
Lane Configurations						
Volume (vph)	71	20	535	186	35	425
Ideal Flow (vphpl)	1900	1900	1900	1900	1900	1900
Lane Width (ft)	12	12	12	12	12	12
Grade (%)	0%		0%			0%
Storage Length (ft)	0	400		200	450	
Storage Lanes	1	1		1	1	
Taper Length (ft)	25				50	
Satd. Flow (prot)	1752	1538	3539	1615	1805	3539
Flt Permitted	0.950				0.950	
Satd. Flow (perm)	1752	1538	3539	1615	1805	3539
Right Turn on Red		Yes		Yes		
Satd. Flow (RTOR)		24		219		
Link Speed (mph)	50		60			60
Link Distance (ft)	1054		1255			1357
Travel Time (s)	14.4		14.3			15.4
Confl. Peds. (#/hr)						
Confl. Bikes (#/hr)						
Peak Hour Factor	0.85	0.85	0.85	0.85	0.85	0.85
Growth Factor	100%	100%	100%	100%	100%	100%
Heavy Vehicles (%)	3%	5%	2%	0%	0%	2%
Bus Blockages (#/hr)	0	0	0	0	0	0
Parking (#/hr)						
Mid-Block Traffic (%)	0%		0%			0%
Shared Lane Traffic (%)						
Lane Group Flow (vph)	84	24	629	219	41	500
Turn Type	Prot	Prot	NA	Prot	Prot	NA
Protected Phases	4	4	6	6	5	2
Permitted Phases						
Detector Phase	4	4	6	6	5	2
Switch Phase						
Minimum Initial (s)	8.0	8.0	15.0	15.0	6.0	15.0
Minimum Split (s)	16.1	16.1	23.9	23.9	14.9	23.9
Total Split (s)	30.0	30.0	42.0	42.0	18.0	60.0
Total Split (%)	33.3%	33.3%	46.7%	46.7%	20.0%	66.7%
Maximum Green (s)	21.9	21.9	33.1	33.1	9.1	51.1
Yellow Time (s)	5.1	5.1	5.9	5.9	5.9	5.9
All-Red Time (s)	3.0	3.0	3.0	3.0	3.0	3.0
Lost Time Adjust (s)	0.0	0.0	0.0	0.0	0.0	0.0
Total Lost Time (s)	8.1	8.1	8.9	8.9	8.9	8.9
Lead/Lag			Lag	Lag	Lead	
Lead-Lag Optimize?			Yes	Yes	Yes	
Vehicle Extension (s)	3.0	3.0	3.0	3.0	3.0	3.0
Minimum Gap (s)	3.0	3.0	3.0	3.0	3.0	3.0
Time Before Reduce (s)	0.0	0.0	0.0	0.0	0.0	0.0
Time To Reduce (s)	0.0	0.0	0.0	0.0	0.0	0.0
Recall Mode	None	None	Min	Min	None	Min
Walk Time (s)						
Flash Dont Walk (s)						

Lane Group	WBL	WBR	NBT	NBR	SBL	SBT
Pedestrian Calls (#/hr)						
Act Effct Green (s)	9.3	9.3	26.7	26.7	7.2	32.1
Actuated g/C Ratio	0.18	0.18	0.51	0.51	0.14	0.61
v/c Ratio	0.27	0.08	0.35	0.24	0.17	0.23
Control Delay	24.8	12.0	13.9	3.7	25.8	7.0
Queue Delay	0.0	0.0	0.0	0.0	0.0	0.0
Total Delay	24.8	12.0	13.9	3.7	25.8	7.0
LOS	C	B	B	A	C	A
Approach Delay	21.9		11.3			8.5
Approach LOS	C		B			A

Intersection Summary	
Area Type: Other	
Cycle Length: 90	
Actuated Cycle Length: 52.6	
Natural Cycle: 55	
Control Type: Actuated-Uncoordinated	
Maximum v/c Ratio: 0.35	
Intersection Signal Delay: 11.0	Intersection LOS: B
Intersection Capacity Utilization 48.0%	ICU Level of Service A
Analysis Period (min) 15	

Splits and Phases: 1: SR 5 (US 1) & Belle Terre Blvd

Intersection	
Int Delay, s/veh	1.2

Movement	EBL	EBT	EBR	WBL	WBT	WBR	NBL	NBT	NBR	SBL	SBT	SBR
Vol, veh/h	17	198	6	2	86	31	2	0	2	20	0	3
Conflicting Peds, #/hr	0	0	0	0	0	0	0	0	0	0	0	0
Sign Control	Free	Free	Free	Free	Free	Free	Stop	Stop	Stop	Stop	Stop	Stop
RT Channelized	-	-	None	-	-	None	-	-	None	-	-	None
Storage Length	-	-	-	-	-	-	-	-	-	-	-	-
Veh in Median Storage, #	-	0	-	-	0	-	-	0	-	-	0	-
Grade, %	-	0	-	-	0	-	-	0	-	-	0	-
Peak Hour Factor	92	92	92	92	92	92	92	92	92	92	92	92
Heavy Vehicles, %	0	0	0	0	2	0	0	0	0	0	0	0
Mvmt Flow	18	215	7	2	93	34	2	0	2	22	0	3

Major/Minor	Major1			Major2			Minor1			Minor2		
Conflicting Flow All	127	0	0	222	0	0	371	387	218	372	374	110
Stage 1	-	-	-	-	-	-	255	255	-	115	115	-
Stage 2	-	-	-	-	-	-	116	132	-	257	259	-
Critical Hdwy	4.1	-	-	4.1	-	-	7.1	6.5	6.2	7.1	6.5	6.2
Critical Hdwy Stg 1	-	-	-	-	-	-	6.1	5.5	-	6.1	5.5	-
Critical Hdwy Stg 2	-	-	-	-	-	-	6.1	5.5	-	6.1	5.5	-
Follow-up Hdwy	2.2	-	-	2.2	-	-	3.5	4	3.3	3.5	4	3.3
Pot Cap-1 Maneuver	1472	-	-	1359	-	-	589	551	827	589	560	949
Stage 1	-	-	-	-	-	-	754	700	-	895	804	-
Stage 2	-	-	-	-	-	-	894	791	-	752	697	-
Platoon blocked, %		-	-		-	-						
Mov Cap-1 Maneuver	1472	-	-	1359	-	-	580	542	827	580	551	949
Mov Cap-2 Maneuver	-	-	-	-	-	-	580	542	-	580	551	-
Stage 1	-	-	-	-	-	-	743	690	-	882	802	-
Stage 2	-	-	-	-	-	-	889	789	-	740	687	-

Approach	EB	WB	NB	SB
HCM Control Delay, s	0.6	0.1	10.3	11.1
HCM LOS			B	B

Minor Lane/Major Mvmt	NBLn1	EBL	EBT	EBR	WBL	WBT	WBR	SBLn1
Capacity (veh/h)	682	1472	-	-	1359	-	-	611
HCM Lane V/C Ratio	0.006	0.013	-	-	0.002	-	-	0.041
HCM Control Delay (s)	10.3	7.5	0	-	7.7	0	-	11.1
HCM Lane LOS	B	A	A	-	A	A	-	B
HCM 95th %tile Q(veh)	0	0	-	-	0	-	-	0.1

Intersection	
Int Delay, s/veh	0.3

Movement	EBT	EBR	WBL	WBT	NBL	NBR
Vol, veh/h	214	6	4	116	3	2
Conflicting Peds, #/hr	0	0	0	0	0	0
Sign Control	Free	Free	Free	Free	Stop	Stop
RT Channelized	-	None	-	None	-	None
Storage Length	-	-	-	-	0	-
Veh in Median Storage, #	0	-	-	0	0	-
Grade, %	0	-	-	0	0	-
Peak Hour Factor	91	91	91	91	91	91
Heavy Vehicles, %	0	0	0	2	0	0
Mvmt Flow	235	7	4	127	3	2

Major/Minor	Major1		Major2		Minor1	
Conflicting Flow All	0	0	242	0	374	238
Stage 1	-	-	-	-	238	-
Stage 2	-	-	-	-	136	-
Critical Hdwy	-	-	4.1	-	6.4	6.2
Critical Hdwy Stg 1	-	-	-	-	5.4	-
Critical Hdwy Stg 2	-	-	-	-	5.4	-
Follow-up Hdwy	-	-	2.2	-	3.5	3.3
Pot Cap-1 Maneuver	-	-	1336	-	631	806
Stage 1	-	-	-	-	806	-
Stage 2	-	-	-	-	895	-
Platoon blocked, %	-	-		-		
Mov Cap-1 Maneuver	-	-	1336	-	629	806
Mov Cap-2 Maneuver	-	-	-	-	629	-
Stage 1	-	-	-	-	806	-
Stage 2	-	-	-	-	892	-

Approach	EB	WB	NB
HCM Control Delay, s	0	0.3	10.3
HCM LOS			B

Minor Lane/Major Mvmt	NBLn1	EBT	EBR	WBL	WBT
Capacity (veh/h)	690	-	-	1336	-
HCM Lane V/C Ratio	0.008	-	-	0.003	-
HCM Control Delay (s)	10.3	-	-	7.7	0
HCM Lane LOS	B	-	-	A	A
HCM 95th %tile Q(veh)	0	-	-	0	-

Intersection	
Int Delay, s/veh	0.6

Movement	EBL	EBT	EBR	WBL	WBT	WBR	NBL	NBT	NBR	SBL	SBT	SBR
Vol, veh/h	3	208	5	9	114	6	2	0	2	3	0	4
Conflicting Peds, #/hr	0	0	0	0	0	0	0	0	0	0	0	0
Sign Control	Free	Free	Free	Free	Free	Free	Stop	Stop	Stop	Stop	Stop	Stop
RT Channelized	-	-	None	-	-	None	-	-	None	-	-	None
Storage Length	-	-	-	-	-	-	-	-	-	-	-	-
Veh in Median Storage, #	-	0	-	-	0	-	-	0	-	-	0	-
Grade, %	-	0	-	-	0	-	-	0	-	-	0	-
Peak Hour Factor	95	95	95	95	95	95	95	95	95	95	95	95
Heavy Vehicles, %	0	0	0	0	3	0	0	0	0	0	0	0
Mvmt Flow	3	219	5	9	120	6	2	0	2	3	0	4

Major/Minor	Major1			Major2			Minor1			Minor2		
Conflicting Flow All	126	0	0	224	0	0	372	373	222	371	373	123
Stage 1	-	-	-	-	-	-	228	228	-	142	142	-
Stage 2	-	-	-	-	-	-	144	145	-	229	231	-
Critical Hdwy	4.1	-	-	4.1	-	-	7.1	6.5	6.2	7.1	6.5	6.2
Critical Hdwy Stg 1	-	-	-	-	-	-	6.1	5.5	-	6.1	5.5	-
Critical Hdwy Stg 2	-	-	-	-	-	-	6.1	5.5	-	6.1	5.5	-
Follow-up Hdwy	2.2	-	-	2.2	-	-	3.5	4	3.3	3.5	4	3.3
Pot Cap-1 Maneuver	1473	-	-	1357	-	-	589	561	823	589	561	933
Stage 1	-	-	-	-	-	-	779	719	-	866	783	-
Stage 2	-	-	-	-	-	-	864	781	-	778	717	-
Platoon blocked, %		-	-		-	-						
Mov Cap-1 Maneuver	1473	-	-	1357	-	-	582	556	823	583	556	933
Mov Cap-2 Maneuver	-	-	-	-	-	-	582	556	-	583	556	-
Stage 1	-	-	-	-	-	-	777	718	-	864	778	-
Stage 2	-	-	-	-	-	-	854	776	-	774	716	-

Approach	EB	WB	NB	SB
HCM Control Delay, s	0.1	0.5	10.3	9.9
HCM LOS			B	A

Minor Lane/Major Mvmt	NBLn1	EBL	EBT	EBR	WBL	WBT	WBR	SBLn1
Capacity (veh/h)	682	1473	-	-	1357	-	-	742
HCM Lane V/C Ratio	0.006	0.002	-	-	0.007	-	-	0.01
HCM Control Delay (s)	10.3	7.4	0	-	7.7	0	-	9.9
HCM Lane LOS	B	A	A	-	A	A	-	A
HCM 95th %tile Q(veh)	0	0	-	-	0	-	-	0

Intersection	
Int Delay, s/veh	1.2

Movement	EBT	EBR	WBL	WBT	NBL	NBR
Vol, veh/h	206	7	21	123	6	23
Conflicting Peds, #/hr	0	0	0	0	0	0
Sign Control	Free	Free	Free	Free	Stop	Stop
RT Channelized	-	None	-	None	-	None
Storage Length	-	-	-	-	0	-
Veh in Median Storage, #	0	-	-	0	0	-
Grade, %	0	-	-	0	0	-
Peak Hour Factor	87	87	87	87	87	87
Heavy Vehicles, %	0	0	5	3	0	0
Mvmt Flow	237	8	24	141	7	26

Major/Minor	Major1		Major2		Minor1	
Conflicting Flow All	0	0	245	0	431	241
Stage 1	-	-	-	-	241	-
Stage 2	-	-	-	-	190	-
Critical Hdwy	-	-	4.15	-	6.4	6.2
Critical Hdwy Stg 1	-	-	-	-	5.4	-
Critical Hdwy Stg 2	-	-	-	-	5.4	-
Follow-up Hdwy	-	-	2.245	-	3.5	3.3
Pot Cap-1 Maneuver	-	-	1304	-	585	803
Stage 1	-	-	-	-	804	-
Stage 2	-	-	-	-	847	-
Platoon blocked, %	-	-		-		
Mov Cap-1 Maneuver	-	-	1304	-	573	803
Mov Cap-2 Maneuver	-	-	-	-	573	-
Stage 1	-	-	-	-	804	-
Stage 2	-	-	-	-	830	-

Approach	EB	WB	NB
HCM Control Delay, s	0	1.1	10.1
HCM LOS			B

Minor Lane/Major Mvmt	NBLn1	EBT	EBR	WBL	WBT
Capacity (veh/h)	741	-	-	1304	-
HCM Lane V/C Ratio	0.045	-	-	0.019	-
HCM Control Delay (s)	10.1	-	-	7.8	0
HCM Lane LOS	B	-	-	A	A
HCM 95th %tile Q(veh)	0.1	-	-	0.1	-

Intersection	
Int Delay, s/veh	0.6

Movement	WBL	WBR	NBT	NBR	SBL	SBT
Vol, veh/h	11	8	217	22	8	131
Conflicting Peds, #/hr	0	0	0	0	0	0
Sign Control	Stop	Stop	Free	Free	Free	Free
RT Channelized	-	None	-	None	-	None
Storage Length	0	-	-	-	-	-
Veh in Median Storage, #	0	-	0	-	-	0
Grade, %	0	-	0	-	-	0
Peak Hour Factor	94	94	94	94	94	94
Heavy Vehicles, %	0	0	0	0	0	4
Mvmt Flow	12	9	231	23	9	139

Major/Minor	Minor1		Major1		Major2	
Conflicting Flow All	399	243	0	0	254	0
Stage 1	243	-	-	-	-	-
Stage 2	156	-	-	-	-	-
Critical Hdwy	6.4	6.2	-	-	4.1	-
Critical Hdwy Stg 1	5.4	-	-	-	-	-
Critical Hdwy Stg 2	5.4	-	-	-	-	-
Follow-up Hdwy	3.5	3.3	-	-	2.2	-
Pot Cap-1 Maneuver	611	801	-	-	1323	-
Stage 1	802	-	-	-	-	-
Stage 2	877	-	-	-	-	-
Platoon blocked, %			-	-		-
Mov Cap-1 Maneuver	607	801	-	-	1323	-
Mov Cap-2 Maneuver	607	-	-	-	-	-
Stage 1	802	-	-	-	-	-
Stage 2	871	-	-	-	-	-

Approach	WB	NB	SB
HCM Control Delay, s	10.5	0	0.4
HCM LOS	B		

Minor Lane/Major Mvmt	NBT	NBR	WBLn1	SBL	SBT
Capacity (veh/h)	-	-	676	1323	-
HCM Lane V/C Ratio	-	-	0.03	0.006	-
HCM Control Delay (s)	-	-	10.5	7.7	0
HCM Lane LOS	-	-	B	A	A
HCM 95th %tile Q(veh)	-	-	0.1	0	-

Intersection	
Int Delay, s/veh	1

Movement	EBL	EBR	NBL	NBT	SBT	SBR
Vol, veh/h	15	8	22	203	131	25
Conflicting Peds, #/hr	0	0	0	0	0	0
Sign Control	Stop	Stop	Free	Free	Free	Free
RT Channelized	-	None	-	None	-	None
Storage Length	0	-	-	-	-	-
Veh in Median Storage, #	0	-	-	0	0	-
Grade, %	0	-	-	0	0	-
Peak Hour Factor	94	94	94	94	94	94
Heavy Vehicles, %	0	0	0	1	2	0
Mvmt Flow	16	9	23	216	139	27

Major/Minor	Minor2		Major1		Major2	
Conflicting Flow All	416	153	166	0	-	0
Stage 1	153	-	-	-	-	-
Stage 2	263	-	-	-	-	-
Critical Hdwy	6.4	6.2	4.1	-	-	-
Critical Hdwy Stg 1	5.4	-	-	-	-	-
Critical Hdwy Stg 2	5.4	-	-	-	-	-
Follow-up Hdwy	3.5	3.3	2.2	-	-	-
Pot Cap-1 Maneuver	597	898	1424	-	-	-
Stage 1	880	-	-	-	-	-
Stage 2	786	-	-	-	-	-
Platoon blocked, %				-	-	-
Mov Cap-1 Maneuver	586	898	1424	-	-	-
Mov Cap-2 Maneuver	586	-	-	-	-	-
Stage 1	880	-	-	-	-	-
Stage 2	772	-	-	-	-	-

Approach	EB	NB	SB
HCM Control Delay, s	10.6	0.7	0
HCM LOS	B		

Minor Lane/Major Mvmt	NBL	NBT	EBLn1	SBT	SBR
Capacity (veh/h)	1424	-	667	-	-
HCM Lane V/C Ratio	0.016	-	0.037	-	-
HCM Control Delay (s)	7.6	0	10.6	-	-
HCM Lane LOS	A	A	B	-	-
HCM 95th %tile Q(veh)	0.1	-	0.1	-	-

Intersection	
Int Delay, s/veh	0.6

Movement	EBL	EBR	NBL	NBT	SBT	SBR
Vol, veh/h	16	4	6	212	152	23
Conflicting Peds, #/hr	0	0	0	0	0	0
Sign Control	Stop	Stop	Free	Free	Free	Free
RT Channelized	-	None	-	None	-	None
Storage Length	0	-	-	-	-	-
Veh in Median Storage, #	0	-	-	0	0	-
Grade, %	0	-	-	0	0	-
Peak Hour Factor	93	93	93	93	93	93
Heavy Vehicles, %	0	0	0	0	2	0
Mvmt Flow	17	4	6	228	163	25

Major/Minor	Minor2		Major1		Major2	
Conflicting Flow All	417	176	188	0	-	0
Stage 1	176	-	-	-	-	-
Stage 2	241	-	-	-	-	-
Critical Hdwy	6.4	6.2	4.1	-	-	-
Critical Hdwy Stg 1	5.4	-	-	-	-	-
Critical Hdwy Stg 2	5.4	-	-	-	-	-
Follow-up Hdwy	3.5	3.3	2.2	-	-	-
Pot Cap-1 Maneuver	596	872	1398	-	-	-
Stage 1	859	-	-	-	-	-
Stage 2	804	-	-	-	-	-
Platoon blocked, %				-	-	-
Mov Cap-1 Maneuver	593	872	1398	-	-	-
Mov Cap-2 Maneuver	593	-	-	-	-	-
Stage 1	859	-	-	-	-	-
Stage 2	800	-	-	-	-	-

Approach	EB	NB	SB
HCM Control Delay, s	10.9	0.2	0
HCM LOS	B		

Minor Lane/Major Mvmt	NBL	NBT	EBLn1	SBT	SBR
Capacity (veh/h)	1398	-	634	-	-
HCM Lane V/C Ratio	0.005	-	0.034	-	-
HCM Control Delay (s)	7.6	0	10.9	-	-
HCM Lane LOS	A	A	B	-	-
HCM 95th %tile Q(veh)	0	-	0.1	-	-

Intersection	
Int Delay, s/veh	1.6

Movement	WBL	WBR	NBT	NBR	SBL	SBT
Vol, veh/h	5	32	223	5	54	170
Conflicting Peds, #/hr	0	0	0	0	0	0
Sign Control	Stop	Stop	Free	Free	Free	Free
RT Channelized	-	None	-	None	-	None
Storage Length	0	-	-	-	-	-
Veh in Median Storage, #	0	-	0	-	-	0
Grade, %	0	-	0	-	-	0
Peak Hour Factor	94	94	94	94	94	94
Heavy Vehicles, %	0	0	0	0	0	2
Mvmt Flow	5	34	237	5	57	181

Major/Minor	Minor1		Major1		Major2	
Conflicting Flow All	536	240	0	0	243	0
Stage 1	240	-	-	-	-	-
Stage 2	296	-	-	-	-	-
Critical Hdwy	6.4	6.2	-	-	4.1	-
Critical Hdwy Stg 1	5.4	-	-	-	-	-
Critical Hdwy Stg 2	5.4	-	-	-	-	-
Follow-up Hdwy	3.5	3.3	-	-	2.2	-
Pot Cap-1 Maneuver	509	804	-	-	1335	-
Stage 1	805	-	-	-	-	-
Stage 2	759	-	-	-	-	-
Platoon blocked, %			-	-		-
Mov Cap-1 Maneuver	485	804	-	-	1335	-
Mov Cap-2 Maneuver	485	-	-	-	-	-
Stage 1	805	-	-	-	-	-
Stage 2	723	-	-	-	-	-

Approach	WB	NB	SB
HCM Control Delay, s	10.2	0	1.9
HCM LOS	B		

Minor Lane/Major Mvmt	NBT	NBR	WBLn1	SBL	SBT
Capacity (veh/h)	-	-	738	1335	-
HCM Lane V/C Ratio	-	-	0.053	0.043	-
HCM Control Delay (s)	-	-	10.2	7.8	0
HCM Lane LOS	-	-	B	A	A
HCM 95th %tile Q(veh)	-	-	0.2	0.1	-

Intersection	
Int Delay, s/veh	0.6

Movement	EBL	EBR	NBL	NBT	SBT	SBR
Vol, veh/h	14	8	5	250	216	18
Conflicting Peds, #/hr	0	0	0	0	0	0
Sign Control	Stop	Stop	Free	Free	Free	Free
RT Channelized	-	None	-	None	-	None
Storage Length	0	-	-	-	-	-
Veh in Median Storage, #	0	-	-	0	0	-
Grade, %	0	-	-	0	0	-
Peak Hour Factor	92	92	92	92	92	92
Heavy Vehicles, %	0	0	0	0	1	0
Mvmt Flow	15	9	5	272	235	20

Major/Minor	Minor2		Major1		Major2	
Conflicting Flow All	528	245	254	0	-	0
Stage 1	245	-	-	-	-	-
Stage 2	283	-	-	-	-	-
Critical Hdwy	6.4	6.2	4.1	-	-	-
Critical Hdwy Stg 1	5.4	-	-	-	-	-
Critical Hdwy Stg 2	5.4	-	-	-	-	-
Follow-up Hdwy	3.5	3.3	2.2	-	-	-
Pot Cap-1 Maneuver	514	799	1323	-	-	-
Stage 1	800	-	-	-	-	-
Stage 2	770	-	-	-	-	-
Platoon blocked, %				-	-	-
Mov Cap-1 Maneuver	512	799	1323	-	-	-
Mov Cap-2 Maneuver	512	-	-	-	-	-
Stage 1	800	-	-	-	-	-
Stage 2	767	-	-	-	-	-

Approach	EB	NB	SB
HCM Control Delay, s	11.4	0.2	0
HCM LOS	B		

Minor Lane/Major Mvmt	NBL	NBT	EBLn1	SBT	SBR
Capacity (veh/h)	1323	-	589	-	-
HCM Lane V/C Ratio	0.004	-	0.041	-	-
HCM Control Delay (s)	7.7	0	11.4	-	-
HCM Lane LOS	A	A	B	-	-
HCM 95th %tile Q(veh)	0	-	0.1	-	-

Intersection	
Int Delay, s/veh	0.2

Movement	EBL	EBR	NBL	NBT	SBT	SBR
Vol, veh/h	6	2	5	259	232	11
Conflicting Peds, #/hr	0	0	0	0	0	0
Sign Control	Stop	Stop	Free	Free	Free	Free
RT Channelized	-	None	-	None	-	None
Storage Length	0	-	-	-	-	-
Veh in Median Storage, #	0	-	-	0	0	-
Grade, %	0	-	-	0	0	-
Peak Hour Factor	96	96	96	96	96	96
Heavy Vehicles, %	0	0	0	1	2	0
Mvmt Flow	6	2	5	270	242	11

Major/Minor	Minor2		Major1		Major2	
Conflicting Flow All	527	247	253	0	-	0
Stage 1	247	-	-	-	-	-
Stage 2	280	-	-	-	-	-
Critical Hdwy	6.4	6.2	4.1	-	-	-
Critical Hdwy Stg 1	5.4	-	-	-	-	-
Critical Hdwy Stg 2	5.4	-	-	-	-	-
Follow-up Hdwy	3.5	3.3	2.2	-	-	-
Pot Cap-1 Maneuver	515	797	1324	-	-	-
Stage 1	799	-	-	-	-	-
Stage 2	772	-	-	-	-	-
Platoon blocked, %				-	-	-
Mov Cap-1 Maneuver	513	797	1324	-	-	-
Mov Cap-2 Maneuver	513	-	-	-	-	-
Stage 1	799	-	-	-	-	-
Stage 2	769	-	-	-	-	-

Approach	EB	NB	SB
HCM Control Delay, s	11.5	0.1	0
HCM LOS	B		

Minor Lane/Major Mvmt	NBL	NBT	EBLn1	SBT	SBR
Capacity (veh/h)	1324	-	563	-	-
HCM Lane V/C Ratio	0.004	-	0.015	-	-
HCM Control Delay (s)	7.7	0	11.5	-	-
HCM Lane LOS	A	A	B	-	-
HCM 95th %tile Q(veh)	0	-	0	-	-

Intersection	
Int Delay, s/veh	0.4

Movement	EBL	EBR	NBL	NBT	SBT	SBR
Vol, veh/h	10	2	8	257	241	16
Conflicting Peds, #/hr	0	0	0	0	0	0
Sign Control	Stop	Stop	Free	Free	Free	Free
RT Channelized	-	None	-	None	-	None
Storage Length	0	-	-	-	-	-
Veh in Median Storage, #	0	-	-	0	0	-
Grade, %	0	-	-	0	0	-
Peak Hour Factor	94	94	94	94	94	94
Heavy Vehicles, %	0	0	0	0	2	0
Mvmt Flow	11	2	9	273	256	17

Major/Minor	Minor2		Major1		Major2	
Conflicting Flow All	555	265	273	0	-	0
Stage 1	265	-	-	-	-	-
Stage 2	290	-	-	-	-	-
Critical Hdwy	6.4	6.2	4.1	-	-	-
Critical Hdwy Stg 1	5.4	-	-	-	-	-
Critical Hdwy Stg 2	5.4	-	-	-	-	-
Follow-up Hdwy	3.5	3.3	2.2	-	-	-
Pot Cap-1 Maneuver	496	779	1302	-	-	-
Stage 1	784	-	-	-	-	-
Stage 2	764	-	-	-	-	-
Platoon blocked, %				-	-	-
Mov Cap-1 Maneuver	492	779	1302	-	-	-
Mov Cap-2 Maneuver	492	-	-	-	-	-
Stage 1	784	-	-	-	-	-
Stage 2	758	-	-	-	-	-

Approach	EB	NB	SB
HCM Control Delay, s	12	0.2	0
HCM LOS	B		

Minor Lane/Major Mvmt	NBL	NBT	EBLn1	SBT	SBR
Capacity (veh/h)	1302	-	524	-	-
HCM Lane V/C Ratio	0.007	-	0.024	-	-
HCM Control Delay (s)	7.8	0	12	-	-
HCM Lane LOS	A	A	B	-	-
HCM 95th %tile Q(veh)	0	-	0.1	-	-

Intersection	
Int Delay, s/veh	0.5

Movement	EBL	EBR	NBL	NBT	SBT	SBR
Vol, veh/h	8	9	15	252	248	23
Conflicting Peds, #/hr	0	0	0	0	0	0
Sign Control	Stop	Stop	Free	Free	Free	Free
RT Channelized	-	None	-	None	-	None
Storage Length	0	-	-	-	-	-
Veh in Median Storage, #	0	-	-	0	0	-
Grade, %	0	-	-	0	0	-
Peak Hour Factor	96	96	96	96	96	96
Heavy Vehicles, %	0	0	0	0	2	0
Mvmt Flow	8	9	16	262	258	24

Major/Minor	Minor2		Major1		Major2	
Conflicting Flow All	564	270	282	0	-	0
Stage 1	270	-	-	-	-	-
Stage 2	294	-	-	-	-	-
Critical Hdwy	6.4	6.2	4.1	-	-	-
Critical Hdwy Stg 1	5.4	-	-	-	-	-
Critical Hdwy Stg 2	5.4	-	-	-	-	-
Follow-up Hdwy	3.5	3.3	2.2	-	-	-
Pot Cap-1 Maneuver	490	774	1292	-	-	-
Stage 1	780	-	-	-	-	-
Stage 2	761	-	-	-	-	-
Platoon blocked, %				-	-	-
Mov Cap-1 Maneuver	483	774	1292	-	-	-
Mov Cap-2 Maneuver	483	-	-	-	-	-
Stage 1	780	-	-	-	-	-
Stage 2	750	-	-	-	-	-

Approach	EB	NB	SB
HCM Control Delay, s	11.2	0.4	0
HCM LOS	B		

Minor Lane/Major Mvmt	NBL	NBT	EBLn1	SBT	SBR
Capacity (veh/h)	1292	-	603	-	-
HCM Lane V/C Ratio	0.012	-	0.029	-	-
HCM Control Delay (s)	7.8	0	11.2	-	-
HCM Lane LOS	A	A	B	-	-
HCM 95th %tile Q(veh)	0	-	0.1	-	-

Intersection	
Int Delay, s/veh	0.9

Movement	EBL	EBR	NBL	NBT	SBT	SBR
Vol, veh/h	36	1	7	253	270	65
Conflicting Peds, #/hr	0	0	0	0	0	0
Sign Control	Stop	Stop	Free	Free	Free	Free
RT Channelized	-	None	-	None	-	None
Storage Length	0	-	-	-	-	-
Veh in Median Storage, #	0	-	-	0	0	-
Grade, %	0	-	-	0	0	-
Peak Hour Factor	94	94	94	94	94	94
Heavy Vehicles, %	0	0	0	1	2	0
Mvmt Flow	38	1	7	269	287	69

Major/Minor	Minor2		Major1		Major2	
Conflicting Flow All	606	322	356	0	-	0
Stage 1	322	-	-	-	-	-
Stage 2	284	-	-	-	-	-
Critical Hdwy	6.4	6.2	4.1	-	-	-
Critical Hdwy Stg 1	5.4	-	-	-	-	-
Critical Hdwy Stg 2	5.4	-	-	-	-	-
Follow-up Hdwy	3.5	3.3	2.2	-	-	-
Pot Cap-1 Maneuver	463	724	1214	-	-	-
Stage 1	739	-	-	-	-	-
Stage 2	769	-	-	-	-	-
Platoon blocked, %				-	-	-
Mov Cap-1 Maneuver	460	724	1214	-	-	-
Mov Cap-2 Maneuver	460	-	-	-	-	-
Stage 1	739	-	-	-	-	-
Stage 2	764	-	-	-	-	-

Approach	EB	NB	SB
HCM Control Delay, s	13.5	0.2	0
HCM LOS	B		

Minor Lane/Major Mvmt	NBL	NBT	EBLn1	SBT	SBR
Capacity (veh/h)	1214	-	465	-	-
HCM Lane V/C Ratio	0.006	-	0.085	-	-
HCM Control Delay (s)	8	0	13.5	-	-
HCM Lane LOS	A	A	B	-	-
HCM 95th %tile Q(veh)	0	-	0.3	-	-

Lane Group	EBL	EBT	EBR	WBL	WBT	WBR	NBL	NBT	NBR	SBL	SBT	SBR
Lane Configurations												
Volume (vph)	353	491	69	152	504	492	37	180	72	356	114	218
Ideal Flow (vphpl)	1900	1900	1900	1900	1900	1900	1900	1900	1900	1900	1900	1900
Lane Width (ft)	12	12	12	12	12	12	12	12	12	12	12	12
Grade (%)		0%			0%			0%			0%	
Storage Length (ft)	450		475	485		485	0		280	525		0
Storage Lanes	1		1	1		1	1		1	2		1
Taper Length (ft)	50			50			200			25		
Satd. Flow (prot)	1787	3539	1615	1787	3471	1599	1805	1818	0	3367	1845	1599
Flt Permitted	0.950			0.950			0.950			0.950		
Satd. Flow (perm)	1787	3539	1615	1787	3471	1599	1805	1818	0	3367	1845	1599
Right Turn on Red			Yes			Yes			Yes			Yes
Satd. Flow (RTOR)			188			153		9				225
Link Speed (mph)		55			55			50			45	
Link Distance (ft)		2394			2403			1138			1482	
Travel Time (s)		29.7			29.8			15.5			22.5	
Confl. Peds. (#/hr)												
Confl. Bikes (#/hr)												
Peak Hour Factor	0.97	0.97	0.97	0.97	0.97	0.97	0.97	0.97	0.97	0.97	0.97	0.97
Growth Factor	100%	100%	100%	100%	100%	100%	100%	100%	100%	100%	100%	100%
Heavy Vehicles (%)	1%	2%	0%	1%	4%	1%	0%	0%	0%	4%	3%	1%
Bus Blockages (#/hr)	0	0	0	0	0	0	0	0	0	0	0	0
Parking (#/hr)												
Mid-Block Traffic (%)		0%			0%			0%			0%	
Shared Lane Traffic (%)												
Lane Group Flow (vph)	364	506	71	157	520	507	38	260	0	367	118	225
Turn Type	Prot	NA	Prot	Prot	NA	pm+ov	Prot	NA		Prot	NA	Perm
Protected Phases	1	6	6	5	2	3	7	4		3	8	
Permitted Phases						2						8
Detector Phase	1	6	6	5	2	3	7	4		3	8	8
Switch Phase												
Minimum Initial (s)	5.0	17.0	17.0	5.0	17.0	10.0	10.0	6.0		10.0	6.0	6.0
Minimum Split (s)	13.8	25.8	25.8	13.8	44.8	18.2	18.5	14.5		18.2	51.2	51.2
Total Split (s)	41.0	57.0	57.0	31.0	47.0	56.0	31.0	36.0		56.0	61.0	61.0
Total Split (%)	22.8%	31.7%	31.7%	17.2%	26.1%	31.1%	17.2%	20.0%		31.1%	33.9%	33.9%
Maximum Green (s)	32.2	48.2	48.2	22.2	38.2	47.8	22.5	27.5		47.8	52.8	52.8
Yellow Time (s)	6.0	6.0	6.0	6.0	6.0	4.8	5.1	5.1		4.8	4.8	4.8
All-Red Time (s)	2.8	2.8	2.8	2.8	2.8	3.4	3.4	3.4		3.4	3.4	3.4
Lost Time Adjust (s)	0.0	0.0	0.0	0.0	0.0	0.0	0.0	0.0		0.0	0.0	0.0
Total Lost Time (s)	8.8	8.8	8.8	8.8	8.8	8.2	8.5	8.5		8.2	8.2	8.2
Lead/Lag	Lead	Lag	Lag	Lead	Lag	Lead	Lead	Lag		Lead	Lag	Lag
Lead-Lag Optimize?	Yes	Yes	Yes	Yes	Yes	Yes	Yes	Yes		Yes	Yes	Yes
Vehicle Extension (s)	3.0	3.0	3.0	3.0	3.0	3.0	3.0	3.0		3.0	3.0	3.0
Minimum Gap (s)	3.0	3.0	3.0	3.0	3.0	3.0	3.0	3.0		3.0	3.0	3.0
Time Before Reduce (s)	0.0	0.0	0.0	0.0	0.0	0.0	0.0	0.0		0.0	0.0	0.0
Time To Reduce (s)	0.0	0.0	0.0	0.0	0.0	0.0	0.0	0.0		0.0	0.0	0.0
Recall Mode	None	Min	Min	None	Min	Min	None	None		Min	None	None
Walk Time (s)					7.0						7.0	7.0
Flash Dont Walk (s)					29.0						36.0	36.0

Lane Group	EBL	EBT	EBR	WBL	WBT	WBR	NBL	NBT	NBR	SBL	SBT	SBR
Pedestrian Calls (#/hr)					0						0	0
Act Effct Green (s)	32.5	41.1	41.1	17.3	25.9	52.7	10.4	24.9		18.0	36.8	36.8
Actuated g/C Ratio	0.24	0.30	0.30	0.13	0.19	0.39	0.08	0.18		0.13	0.27	0.27
v/c Ratio	0.80	0.47	0.11	0.69	0.79	0.71	0.28	0.76		0.65	0.24	0.38
Control Delay	65.6	41.7	0.4	74.5	62.1	29.1	68.8	67.5		64.1	42.7	6.9
Queue Delay	0.0	0.0	0.0	0.0	0.0	0.0	0.0	0.0		0.0	0.0	0.0
Total Delay	65.6	41.7	0.4	74.5	62.1	29.1	68.8	67.5		64.1	42.7	6.9
LOS	E	D	A	E	E	C	E	E		E	D	A
Approach Delay		47.4			49.6			67.7			39.8	
Approach LOS		D			D			E			D	

Intersection Summary

Area Type: Other
Cycle Length: 180
Actuated Cycle Length: 135.8
Natural Cycle: 150
Control Type: Actuated-Uncoordinated
Maximum v/c Ratio: 0.80
Intersection Signal Delay: 48.7 — Intersection LOS: D
Intersection Capacity Utilization 84.0% — ICU Level of Service E
Analysis Period (min) 15

Splits and Phases: 15: Belle Terre Blvd/Belle Terre Pkwy & SR 100

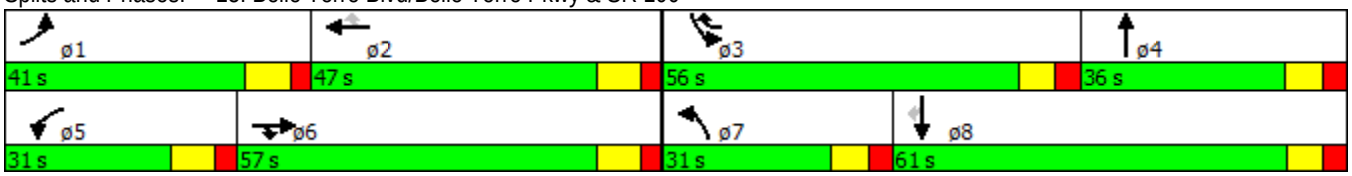

Intersection	
Int Delay, s/veh	0.4

Movement	EBL	EBR	NBL	NBT	SBT	SBR
Vol, veh/h	7	19	32	1138	883	11
Conflicting Peds, #/hr	0	0	0	0	0	0
Sign Control	Stop	Stop	Free	Free	Free	Free
RT Channelized	-	None	-	None	-	None
Storage Length	0	-	380	-	-	-
Veh in Median Storage, #	1	-	-	0	0	-
Grade, %	0	-	-	0	0	-
Peak Hour Factor	99	99	99	99	99	99
Heavy Vehicles, %	0	11	13	8	1	0
Mvmt Flow	7	19	32	1149	892	11

Major/Minor	Minor2		Major1		Major2	
Conflicting Flow All	1536	452	903	0	-	0
Stage 1	897	-	-	-	-	-
Stage 2	639	-	-	-	-	-
Critical Hdwy	6.8	7.12	4.36	-	-	-
Critical Hdwy Stg 1	5.8	-	-	-	-	-
Critical Hdwy Stg 2	5.8	-	-	-	-	-
Follow-up Hdwy	3.5	3.41	2.33	-	-	-
Pot Cap-1 Maneuver	109	531	683	-	-	-
Stage 1	363	-	-	-	-	-
Stage 2	493	-	-	-	-	-
Platoon blocked, %				-	-	-
Mov Cap-1 Maneuver	104	531	683	-	-	-
Mov Cap-2 Maneuver	233	-	-	-	-	-
Stage 1	363	-	-	-	-	-
Stage 2	470	-	-	-	-	-

Approach	EB	NB	SB
HCM Control Delay, s	14.8	0.3	0
HCM LOS	B		

Minor Lane/Major Mvmt	NBL	NBT	EBLn1	SBT	SBR
Capacity (veh/h)	683	-	395	-	-
HCM Lane V/C Ratio	0.047	-	0.066	-	-
HCM Control Delay (s)	10.5	-	14.8	-	-
HCM Lane LOS	B	-	B	-	-
HCM 95th %tile Q(veh)	0.1	-	0.2	-	-

Intersection	
Int Delay, s/veh	1.7

Movement	EBL	EBT	EBR	WBL	WBT	WBR	NBL	NBT	NBR	SBL	SBT	SBR
Vol, veh/h	16	0	2	63	3	23	0	1099	46	11	829	22
Conflicting Peds, #/hr	0	0	0	0	0	0	0	0	0	0	0	0
Sign Control	Stop	Stop	Stop	Stop	Stop	Stop	Free	Free	Free	Free	Free	Free
RT Channelized	-	-	None	-	-	None	-	-	None	-	-	None
Storage Length	-	-	-	300	-	-	350	-	250	400	-	-
Veh in Median Storage, #	-	1	-	-	1	-	-	0	-	-	0	-
Grade, %	-	0	-	-	0	-	-	0	-	-	0	-
Peak Hour Factor	95	95	95	95	95	95	95	95	95	95	95	95
Heavy Vehicles, %	0	0	0	0	0	0	0	1	2	0	2	14
Mvmt Flow	17	0	2	66	3	24	0	1157	48	12	873	23

Major/Minor	Minor2			Minor1			Major1			Major2		
Conflicting Flow All	1487	2064	448	1616	2076	578	896	0	0	1157	0	0
Stage 1	907	907	-	1157	1157	-	-	-	-	-	-	-
Stage 2	580	1157	-	459	919	-	-	-	-	-	-	-
Critical Hdwy	7.5	6.5	6.9	7.5	6.5	6.9	4.1	-	-	4.1	-	-
Critical Hdwy Stg 1	6.5	5.5	-	6.5	5.5	-	-	-	-	-	-	-
Critical Hdwy Stg 2	6.5	5.5	-	6.5	5.5	-	-	-	-	-	-	-
Follow-up Hdwy	3.5	4	3.3	3.5	4	3.3	2.2	-	-	2.2	-	-
Pot Cap-1 Maneuver	88	55	564	70	54	464	766	-	-	611	-	-
Stage 1	301	357	-	212	273	-	-	-	-	-	-	-
Stage 2	472	273	-	557	353	-	-	-	-	-	-	-
Platoon blocked, %								-	-		-	-
Mov Cap-1 Maneuver	81	54	564	69	53	464	766	-	-	611	-	-
Mov Cap-2 Maneuver	197	160	-	163	163	-	-	-	-	-	-	-
Stage 1	301	350	-	212	273	-	-	-	-	-	-	-
Stage 2	442	273	-	544	346	-	-	-	-	-	-	-

Approach	EB	WB	NB	SB
HCM Control Delay, s	23.6	33.8	0	0.1
HCM LOS	C	D		

Minor Lane/Major Mvmt	NBL	NBT	NBR	EBLn1	WBLn1	WBLn2	SBL	SBT	SBR
Capacity (veh/h)	766	-	-	212	163	382	611	-	-
HCM Lane V/C Ratio	-	-	-	0.089	0.407	0.072	0.019	-	-
HCM Control Delay (s)	0	-	-	23.6	41.5	15.2	11	-	-
HCM Lane LOS	A	-	-	C	E	C	B	-	-
HCM 95th %tile Q(veh)	0	-	-	0.3	1.8	0.2	0.1	-	-

Lane Group	EBL	EBT	EBR	WBL	WBT	WBR	NBL	NBT	NBR	SBL	SBT	SBR
Lane Configurations												
Volume (vph)	100	35	112	40	57	230	162	968	8	167	710	147
Ideal Flow (vphpl)	1900	1900	1900	1900	1900	1900	1900	1900	1900	1900	1900	1900
Lane Width (ft)	12	12	12	12	12	12	12	12	12	12	12	12
Grade (%)		0%			0%			0%			0%	
Storage Length (ft)	0		100	285		0	325		450	450		275
Storage Lanes	1		1	1		1	1		1	1		1
Taper Length (ft)	50			75			50			50		
Satd. Flow (prot)	1770	1683	0	1752	1900	1615	1787	3574	1615	1805	3574	1615
Flt Permitted	0.678			0.648			0.950			0.950		
Satd. Flow (perm)	1263	1683	0	1195	1900	1615	1787	3574	1615	1805	3574	1615
Right Turn on Red			Yes			Yes			Yes			Yes
Satd. Flow (RTOR)		118				242			264			202
Link Speed (mph)		40			40			45			45	
Link Distance (ft)		664			1054			1578			2742	
Travel Time (s)		11.3			18.0			23.9			41.5	
Confl. Peds. (#/hr)												
Confl. Bikes (#/hr)												
Peak Hour Factor	0.95	0.95	0.95	0.95	0.95	0.95	0.95	0.95	0.95	0.95	0.95	0.95
Growth Factor	100%	100%	100%	100%	100%	100%	100%	100%	100%	100%	100%	100%
Heavy Vehicles (%)	2%	0%	0%	3%	0%	0%	1%	1%	0%	0%	1%	0%
Bus Blockages (#/hr)	0	0	0	0	0	0	0	0	0	0	0	0
Parking (#/hr)												
Mid-Block Traffic (%)		0%			0%			0%			0%	
Shared Lane Traffic (%)												
Lane Group Flow (vph)	105	155	0	42	60	242	171	1019	8	176	747	155
Turn Type	pm+pt	NA		pm+pt	NA	Perm	Prot	NA	Perm	Prot	NA	Perm
Protected Phases	3	8		7	4		1	6		5	2	
Permitted Phases	8			4		4			6			2
Detector Phase	3	8		7	4	4	1	6	6	5	2	2
Switch Phase												
Minimum Initial (s)	5.0	5.0		5.0	5.0	5.0	5.0	15.0	15.0	5.0	15.0	15.0
Minimum Split (s)	11.4	11.4		21.6	41.6	41.6	11.8	21.8	21.8	11.8	29.8	29.8
Total Split (s)	12.0	32.0		21.6	41.6	41.6	15.0	38.4	38.4	28.0	51.4	51.4
Total Split (%)	10.0%	26.7%		18.0%	34.7%	34.7%	12.5%	32.0%	32.0%	23.3%	42.8%	42.8%
Maximum Green (s)	5.6	25.6		16.0	36.0	36.0	8.2	31.6	31.6	21.2	44.6	44.6
Yellow Time (s)	4.4	4.4		3.6	3.6	3.6	4.8	4.8	4.8	4.8	4.8	4.8
All-Red Time (s)	2.0	2.0		2.0	2.0	2.0	2.0	2.0	2.0	2.0	2.0	2.0
Lost Time Adjust (s)	0.0	0.0		0.0	0.0	0.0	0.0	0.0	0.0	0.0	0.0	0.0
Total Lost Time (s)	6.4	6.4		5.6	5.6	5.6	6.8	6.8	6.8	6.8	6.8	6.8
Lead/Lag	Lead	Lag		Lead	Lag	Lag	Lead	Lag	Lag	Lead	Lag	Lag
Lead-Lag Optimize?	Yes	Yes		Yes	Yes	Yes	Yes	Yes	Yes	Yes	Yes	Yes
Vehicle Extension (s)	3.0	3.0		3.0	3.0	3.0	3.0	3.0	3.0	3.0	3.0	3.0
Minimum Gap (s)	3.0	3.0		3.0	3.0	3.0	3.0	3.0	3.0	3.0	3.0	3.0
Time Before Reduce (s)	0.0	0.0		0.0	0.0	0.0	0.0	0.0	0.0	0.0	0.0	0.0
Time To Reduce (s)	0.0	0.0		0.0	0.0	0.0	0.0	0.0	0.0	0.0	0.0	0.0
Recall Mode	None	None		None	None	None	None	Min	Min	None	Min	Min
Walk Time (s)					7.0	7.0					7.0	7.0
Flash Dont Walk (s)					29.0	29.0					16.0	16.0

Lane Group	EBL	EBT	EBR	WBL	WBT	WBR	NBL	NBT	NBR	SBL	SBT	SBR
Pedestrian Calls (#/hr)					0	0					0	0
Act Effct Green (s)	13.9	10.8		15.9	10.1	10.1	8.4	32.2	32.2	13.7	37.6	37.6
Actuated g/C Ratio	0.16	0.13		0.19	0.12	0.12	0.10	0.38	0.38	0.16	0.44	0.44
v/c Ratio	0.44	0.49		0.15	0.27	0.60	0.97	0.75	0.01	0.60	0.47	0.19
Control Delay	34.4	18.4		26.9	38.7	11.7	104.6	29.5	0.0	43.6	18.7	1.6
Queue Delay	0.0	0.0		0.0	0.0	0.0	0.0	0.0	0.0	0.0	0.0	0.0
Total Delay	34.4	18.4		26.9	38.7	11.7	104.6	29.5	0.0	43.6	18.7	1.6
LOS	C	B		C	D	B	F	C	A	D	B	A
Approach Delay		24.8			18.3			40.0			20.3	
Approach LOS		C			B			D			C	

Intersection Summary	
Area Type: Other	
Cycle Length: 120	
Actuated Cycle Length: 84.7	
Natural Cycle: 105	
Control Type: Actuated-Uncoordinated	
Maximum v/c Ratio: 0.97	
Intersection Signal Delay: 28.7	Intersection LOS: C
Intersection Capacity Utilization 70.2%	ICU Level of Service C
Analysis Period (min) 15	

Splits and Phases: 18: Belle Terre Pkwy & Easthampton Blvd /Central Ave

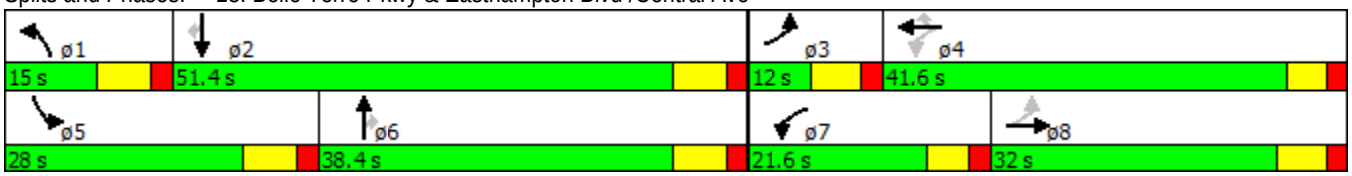

Lane Group	EBL	EBT	EBR	WBL	WBT	WBR	NBL	NBT	NBR	SBL	SBT	SBR
Lane Configurations												
Volume (vph)	41	88	149	74	106	295	141	1088	69	151	801	36
Ideal Flow (vphpl)	1900	1900	1900	1900	1900	1900	1900	1900	1900	1900	1900	1900
Lane Width (ft)	12	12	12	12	12	12	12	12	12	12	12	12
Grade (%)		0%			0%			0%			0%	
Storage Length (ft)	300		0	250		0	350		0	350		0
Storage Lanes	1		0	1		0	1		0	1		0
Taper Length (ft)	50			50			50			50		
Satd. Flow (prot)	1805	1704	0	1805	1679	0	1805	3544	0	1752	3546	0
Flt Permitted	0.208			0.505			0.950			0.950		
Satd. Flow (perm)	395	1704	0	960	1679	0	1805	3544	0	1752	3546	0
Right Turn on Red			Yes			Yes			Yes			Yes
Satd. Flow (RTOR)		71			117			5			5	
Link Speed (mph)		55			55			45			45	
Link Distance (ft)		1429			1119			2742			1415	
Travel Time (s)		17.7			13.9			41.5			21.4	
Confl. Peds. (#/hr)												
Confl. Bikes (#/hr)												
Peak Hour Factor	0.96	0.96	0.96	0.96	0.96	0.96	0.96	0.96	0.96	0.96	0.96	0.96
Growth Factor	100%	100%	100%	100%	100%	100%	100%	100%	100%	100%	100%	100%
Heavy Vehicles (%)	0%	1%	1%	0%	0%	1%	0%	1%	0%	3%	1%	3%
Bus Blockages (#/hr)	0	0	0	0	0	0	0	0	0	0	0	0
Parking (#/hr)												
Mid-Block Traffic (%)		0%			0%			0%			0%	
Shared Lane Traffic (%)												
Lane Group Flow (vph)	43	247	0	77	417	0	147	1205	0	157	872	0
Turn Type	Perm	NA		Perm	NA		Prot	NA		Prot	NA	
Protected Phases		4			8		5	2		1	6	
Permitted Phases	4			8								
Detector Phase	4	4		8	8		5	2		1	6	
Switch Phase												
Minimum Initial (s)	7.0	7.0		7.0	7.0		7.0	15.0		7.0	15.0	
Minimum Split (s)	41.0	41.0		39.0	39.0		13.8	33.8		13.8	33.8	
Total Split (s)	41.0	41.0		41.0	41.0		23.4	37.0		42.0	55.6	
Total Split (%)	34.2%	34.2%		34.2%	34.2%		19.5%	30.8%		35.0%	46.3%	
Maximum Green (s)	34.0	34.0		34.0	34.0		16.6	30.2		35.2	48.8	
Yellow Time (s)	5.0	5.0		5.0	5.0		4.8	4.8		4.8	4.8	
All-Red Time (s)	2.0	2.0		2.0	2.0		2.0	2.0		2.0	2.0	
Lost Time Adjust (s)	0.0	0.0		0.0	0.0		0.0	0.0		0.0	0.0	
Total Lost Time (s)	7.0	7.0		7.0	7.0		6.8	6.8		6.8	6.8	
Lead/Lag							Lead	Lag		Lead	Lag	
Lead-Lag Optimize?							Yes	Yes		Yes	Yes	
Vehicle Extension (s)	3.0	3.0		3.0	3.0		3.0	3.0		3.0	3.0	
Minimum Gap (s)	3.0	3.0		3.0	3.0		3.0	3.0		3.0	3.0	
Time Before Reduce (s)	0.0	0.0		0.0	0.0		0.0	0.0		0.0	0.0	
Time To Reduce (s)	0.0	0.0		0.0	0.0		0.0	0.0		0.0	0.0	
Recall Mode	None	None		None	None		None	Min		None	Min	
Walk Time (s)	7.0	7.0		5.0	5.0			7.0			7.0	
Flash Dont Walk (s)	27.0	27.0		27.0	27.0			20.0			20.0	

Lane Group	EBL	EBT	EBR	WBL	WBT	WBR	NBL	NBT	NBR	SBL	SBT	SBR
Pedestrian Calls (#/hr)	0	0		0	0			0			0	
Act Effct Green (s)	22.1	22.1		22.1	22.1		12.4	32.7		13.8	34.0	
Actuated g/C Ratio	0.25	0.25		0.25	0.25		0.14	0.36		0.15	0.38	
v/c Ratio	0.44	0.52		0.33	0.83		0.59	0.93		0.59	0.65	
Control Delay	45.5	25.0		32.7	38.3		48.9	42.9		46.5	26.9	
Queue Delay	0.0	0.0		0.0	0.0		0.0	0.0		0.0	0.0	
Total Delay	45.5	25.0		32.7	38.3		48.9	42.9		46.5	26.9	
LOS	D	C		C	D		D	D		D	C	
Approach Delay		28.0			37.4			43.5			29.9	
Approach LOS		C			D			D			C	

Intersection Summary

Area Type: Other
Cycle Length: 120
Actuated Cycle Length: 89.7
Natural Cycle: 90
Control Type: Actuated-Uncoordinated
Maximum v/c Ratio: 0.93
Intersection Signal Delay: 36.7 — Intersection LOS: D
Intersection Capacity Utilization 93.2% — ICU Level of Service F
Analysis Period (min) 15

Splits and Phases: 19: Belle Terre Pkwy & Royal Palms Pkwy

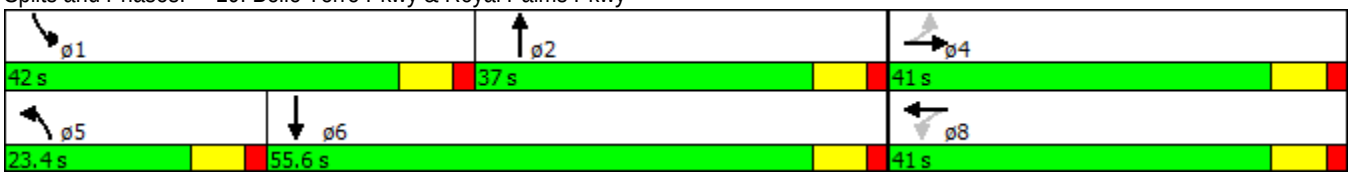

Intersection	
Int Delay, s/veh	1.1

Movement	WBL	WBR	NBT	NBR	SBL	SBT
Vol, veh/h	38	27	1371	53	35	950
Conflicting Peds, #/hr	0	0	0	0	0	0
Sign Control	Stop	Stop	Free	Free	Free	Free
RT Channelized	-	None	-	None	-	None
Storage Length	0	-	-	-	350	-
Veh in Median Storage, #	1	-	0	-	-	0
Grade, %	0	-	0	-	-	0
Peak Hour Factor	98	98	98	98	98	98
Heavy Vehicles, %	0	0	1	0	3	1
Mvmt Flow	39	28	1399	54	36	969

Major/Minor	Minor1		Major1		Major2	
Conflicting Flow All	1982	727	0	0	1453	0
Stage 1	1426	-	-	-	-	-
Stage 2	556	-	-	-	-	-
Critical Hdwy	6.8	6.9	-	-	4.16	-
Critical Hdwy Stg 1	5.8	-	-	-	-	-
Critical Hdwy Stg 2	5.8	-	-	-	-	-
Follow-up Hdwy	3.5	3.3	-	-	2.23	-
Pot Cap-1 Maneuver	55	371	-	-	457	-
Stage 1	191	-	-	-	-	-
Stage 2	544	-	-	-	-	-
Platoon blocked, %			-	-		-
Mov Cap-1 Maneuver	51	371	-	-	457	-
Mov Cap-2 Maneuver	144	-	-	-	-	-
Stage 1	191	-	-	-	-	-
Stage 2	501	-	-	-	-	-

Approach	WB	NB	SB
HCM Control Delay, s	33.1	0	0.5
HCM LOS	D		

Minor Lane/Major Mvmt	NBT	NBR	WBLn1	SBL	SBT
Capacity (veh/h)	-	-	193	457	-
HCM Lane V/C Ratio	-	-	0.344	0.078	-
HCM Control Delay (s)	-	-	33.1	13.5	-
HCM Lane LOS	-	-	D	B	-
HCM 95th %tile Q(veh)	-	-	1.4	0.3	-

Lane Group	EBL	EBR	NBL	NBT	SBT	SBR
Lane Configurations						
Volume (vph)	133	219	355	1043	766	160
Ideal Flow (vphpl)	1900	1900	1900	1900	1900	1900
Lane Width (ft)	12	12	12	12	12	12
Grade (%)	0%			0%	0%	
Storage Length (ft)	250	0	350			200
Storage Lanes	1	1	1			1
Taper Length (ft)	50		50			
Satd. Flow (prot)	1805	1599	1787	3574	3574	1599
Flt Permitted	0.950		0.206			
Satd. Flow (perm)	1805	1599	388	3574	3574	1599
Right Turn on Red		Yes				Yes
Satd. Flow (RTOR)		223				163
Link Speed (mph)	45			45	45	
Link Distance (ft)	1554			1428	1580	
Travel Time (s)	23.5			21.6	23.9	
Confl. Peds. (#/hr)						
Confl. Bikes (#/hr)						
Peak Hour Factor	0.98	0.98	0.98	0.98	0.98	0.98
Growth Factor	100%	100%	100%	100%	100%	100%
Heavy Vehicles (%)	0%	1%	1%	1%	1%	1%
Bus Blockages (#/hr)	0	0	0	0	0	0
Parking (#/hr)						
Mid-Block Traffic (%)	0%			0%	0%	
Shared Lane Traffic (%)						
Lane Group Flow (vph)	136	223	362	1064	782	163
Turn Type	Prot	Prot	pm+pt	NA	NA	Perm
Protected Phases	8	8	1	6	2	
Permitted Phases			6			2
Detector Phase	8	8	1	6	2	2
Switch Phase						
Minimum Initial (s)	6.0	6.0	6.0	15.0	15.0	15.0
Minimum Split (s)	33.8	33.8	13.0	22.0	30.0	30.0
Total Split (s)	35.0	35.0	25.0	85.0	60.0	60.0
Total Split (%)	29.2%	29.2%	20.8%	70.8%	50.0%	50.0%
Maximum Green (s)	28.2	28.2	18.0	78.0	53.0	53.0
Yellow Time (s)	4.8	4.8	4.8	4.8	4.8	4.8
All-Red Time (s)	2.0	2.0	2.2	2.2	2.2	2.2
Lost Time Adjust (s)	0.0	0.0	0.0	0.0	0.0	0.0
Total Lost Time (s)	6.8	6.8	7.0	7.0	7.0	7.0
Lead/Lag			Lead		Lag	Lag
Lead-Lag Optimize?			Yes		Yes	Yes
Vehicle Extension (s)	3.0	3.0	3.0	3.5	3.5	3.5
Minimum Gap (s)	3.0	3.0	3.0	3.0	3.0	3.0
Time Before Reduce (s)	0.0	0.0	0.0	0.0	0.0	0.0
Time To Reduce (s)	0.0	0.0	0.0	0.0	0.0	0.0
Recall Mode	None	None	None	Min	Min	Min
Walk Time (s)	7.0	7.0			5.0	5.0
Flash Dont Walk (s)	20.0	20.0			18.0	18.0

Lane Group	EBL	EBR	NBL	NBT	SBT	SBR
Pedestrian Calls (#/hr)	0	0			0	0
Act Effct Green (s)	11.2	11.2	44.1	44.1	24.1	24.1
Actuated g/C Ratio	0.16	0.16	0.63	0.63	0.35	0.35
v/c Ratio	0.47	0.50	0.72	0.47	0.63	0.25
Control Delay	34.6	9.1	17.6	7.4	21.9	4.3
Queue Delay	0.0	0.0	0.0	0.0	0.0	0.0
Total Delay	34.6	9.1	17.6	7.4	21.9	4.3
LOS	C	A	B	A	C	A
Approach Delay	18.8			10.0	18.9	
Approach LOS	B			B	B	

Intersection Summary	
Area Type: Other	
Cycle Length: 120	
Actuated Cycle Length: 69.5	
Natural Cycle: 80	
Control Type: Actuated-Uncoordinated	
Maximum v/c Ratio: 0.72	
Intersection Signal Delay: 14.2	Intersection LOS: B
Intersection Capacity Utilization 65.5%	ICU Level of Service C
Analysis Period (min) 15	

Splits and Phases: 21: Belle Terre Pkwy & Rymfire Dr

Intersection	
Int Delay, s/veh	1.3

Movement	WBL	WBR	NBT	NBR	SBL	SBT
Vol, veh/h	35	47	1134	42	76	891
Conflicting Peds, #/hr	0	0	0	0	0	0
Sign Control	Stop	Stop	Free	Free	Free	Free
RT Channelized	-	None	-	None	-	None
Storage Length	0	-	-	-	350	-
Veh in Median Storage, #	1	-	0	-	-	0
Grade, %	0	-	0	-	-	0
Peak Hour Factor	98	98	98	98	98	98
Heavy Vehicles, %	3	2	1	0	1	1
Mvmt Flow	36	48	1157	43	78	909

Major/Minor	Minor1		Major1		Major2	
Conflicting Flow All	1789	600	0	0	1200	0
Stage 1	1179	-	-	-	-	-
Stage 2	610	-	-	-	-	-
Critical Hdwy	6.86	6.94	-	-	4.12	-
Critical Hdwy Stg 1	5.86	-	-	-	-	-
Critical Hdwy Stg 2	5.86	-	-	-	-	-
Follow-up Hdwy	3.53	3.32	-	-	2.21	-
Pot Cap-1 Maneuver	72	444	-	-	583	-
Stage 1	252	-	-	-	-	-
Stage 2	502	-	-	-	-	-
Platoon blocked, %			-	-		-
Mov Cap-1 Maneuver	62	444	-	-	583	-
Mov Cap-2 Maneuver	171	-	-	-	-	-
Stage 1	252	-	-	-	-	-
Stage 2	435	-	-	-	-	-

Approach	WB	NB	SB
HCM Control Delay, s	24.8	0	1
HCM LOS	C		

Minor Lane/Major Mvmt	NBT	NBR	WBLn1	SBL	SBT
Capacity (veh/h)	-	-	264	583	-
HCM Lane V/C Ratio	-	-	0.317	0.133	-
HCM Control Delay (s)	-	-	24.8	12.1	-
HCM Lane LOS	-	-	C	B	-
HCM 95th %tile Q(veh)	-	-	1.3	0.5	-

Intersection	
Int Delay, s/veh	2.5

Movement	WBL	WBR	NBT	NBR	SBL	SBT
Vol, veh/h	80	40	1013	168	84	887
Conflicting Peds, #/hr	0	0	0	0	0	0
Sign Control	Stop	Stop	Free	Free	Free	Free
RT Channelized	-	None	-	None	-	None
Storage Length	0	-	-	-	350	-
Veh in Median Storage, #	1	-	0	-	-	0
Grade, %	0	-	0	-	-	0
Peak Hour Factor	98	98	98	98	98	98
Heavy Vehicles, %	1	3	1	0	1	1
Mvmt Flow	82	41	1034	171	86	905

Major/Minor	Minor1		Major1		Major2	
Conflicting Flow All	1743	603	0	0	1205	0
Stage 1	1119	-	-	-	-	-
Stage 2	624	-	-	-	-	-
Critical Hdwy	6.82	6.96	-	-	4.12	-
Critical Hdwy Stg 1	5.82	-	-	-	-	-
Critical Hdwy Stg 2	5.82	-	-	-	-	-
Follow-up Hdwy	3.51	3.33	-	-	2.21	-
Pot Cap-1 Maneuver	~ 79	440	-	-	580	-
Stage 1	276	-	-	-	-	-
Stage 2	499	-	-	-	-	-
Platoon blocked, %			-	-		-
Mov Cap-1 Maneuver	~ 67	440	-	-	580	-
Mov Cap-2 Maneuver	182	-	-	-	-	-
Stage 1	276	-	-	-	-	-
Stage 2	425	-	-	-	-	-

Approach	WB	NB	SB
HCM Control Delay, s	38.3	0	1.1
HCM LOS	E		

Minor Lane/Major Mvmt	NBT	NBR	WBLn1	SBL	SBT
Capacity (veh/h)	-	-	226	580	-
HCM Lane V/C Ratio	-	-	0.542	0.148	-
HCM Control Delay (s)	-	-	38.3	12.3	-
HCM Lane LOS	-	-	E	B	-
HCM 95th %tile Q(veh)	-	-	2.9	0.5	-

Notes

~: Volume exceeds capacity $: Delay exceeds 300s +: Computation Not Defined *: All major volume in platoon

Lane Group	EBL	EBT	EBR	WBL	WBT	WBR	NBL	NBT	NBR	SBL	SBT	SBR
Lane Configurations												
Volume (vph)	113	76	104	69	38	53	129	829	95	61	798	158
Ideal Flow (vphpl)	1900	1900	1900	1900	1900	1900	1900	1900	1900	1900	1900	1900
Lane Width (ft)	12	12	12	12	12	12	12	12	12	12	12	12
Grade (%)		0%			0%			0%			0%	
Storage Length (ft)	325		0	225		0	350		325	250		325
Storage Lanes	1		0	1		0	1		1	1		1
Taper Length (ft)	50			50			50			50		
Satd. Flow (prot)	1805	1737	0	1805	1715	0	1770	3574	1615	1770	3574	1615
Flt Permitted	0.697			0.606			0.950			0.950		
Satd. Flow (perm)	1324	1737	0	1151	1715	0	1770	3574	1615	1770	3574	1615
Right Turn on Red			Yes			Yes			Yes			Yes
Satd. Flow (RTOR)		58			54				97			161
Link Speed (mph)		55			45			45			45	
Link Distance (ft)		1756			1701			1132			1277	
Travel Time (s)		21.8			25.8			17.2			19.3	
Confl. Peds. (#/hr)												
Confl. Bikes (#/hr)												
Peak Hour Factor	0.98	0.98	0.98	0.98	0.98	0.98	0.98	0.98	0.98	0.98	0.98	0.98
Growth Factor	100%	100%	100%	100%	100%	100%	100%	100%	100%	100%	100%	100%
Heavy Vehicles (%)	0%	0%	0%	0%	0%	2%	2%	1%	0%	2%	1%	0%
Bus Blockages (#/hr)	0	0	0	0	0	0	0	0	0	0	0	0
Parking (#/hr)												
Mid-Block Traffic (%)		0%			0%			0%			0%	
Shared Lane Traffic (%)												
Lane Group Flow (vph)	115	184	0	70	93	0	132	846	97	62	814	161
Turn Type	Perm	NA		Perm	NA		Prot	NA	Perm	Prot	NA	Perm
Protected Phases		8			4		5	2		1	6	
Permitted Phases	8			4					2			6
Detector Phase	8	8		4	4		5	2	2	1	6	6
Switch Phase												
Minimum Initial (s)	5.0	5.0		5.0	5.0		9.0	17.0	17.0	9.0	17.0	17.0
Minimum Split (s)	33.0	33.0		11.0	11.0		15.8	33.8	33.8	15.8	33.8	33.8
Total Split (s)	42.0	42.0		42.0	42.0		30.0	58.0	58.0	20.0	48.0	48.0
Total Split (%)	35.0%	35.0%		35.0%	35.0%		25.0%	48.3%	48.3%	16.7%	40.0%	40.0%
Maximum Green (s)	36.0	36.0		36.0	36.0		23.2	51.2	51.2	13.2	41.2	41.2
Yellow Time (s)	4.0	4.0		4.0	4.0		4.8	4.8	4.8	4.8	4.8	4.8
All-Red Time (s)	2.0	2.0		2.0	2.0		2.0	2.0	2.0	2.0	2.0	2.0
Lost Time Adjust (s)	0.0	0.0		0.0	0.0		0.0	0.0	0.0	0.0	0.0	0.0
Total Lost Time (s)	6.0	6.0		6.0	6.0		6.8	6.8	6.8	6.8	6.8	6.8
Lead/Lag							Lead	Lag	Lag	Lead	Lag	Lag
Lead-Lag Optimize?							Yes	Yes	Yes	Yes	Yes	Yes
Vehicle Extension (s)	3.0	3.0		3.0	3.0		3.0	3.0	3.0	3.0	3.0	3.0
Minimum Gap (s)	3.0	3.0		3.0	3.0		3.0	3.0	3.0	3.0	3.0	3.0
Time Before Reduce (s)	0.0	0.0		0.0	0.0		0.0	0.0	0.0	0.0	0.0	0.0
Time To Reduce (s)	0.0	0.0		0.0	0.0		0.0	0.0	0.0	0.0	0.0	0.0
Recall Mode	None	None		None	None		None	Min	Min	None	Min	Min
Walk Time (s)	7.0	7.0						7.0	7.0		7.0	7.0
Flash Dont Walk (s)	20.0	20.0						20.0	20.0		20.0	20.0

Lane Group	EBL	EBT	EBR	WBL	WBT	WBR	NBL	NBT	NBR	SBL	SBT	SBR
Pedestrian Calls (#/hr)	0	0						0	0		0	0
Act Effct Green (s)	12.2	12.2		12.2	12.2		11.7	33.6	33.6	9.8	23.9	23.9
Actuated g/C Ratio	0.18	0.18		0.18	0.18		0.17	0.49	0.49	0.14	0.35	0.35
v/c Ratio	0.49	0.51		0.34	0.27		0.43	0.48	0.11	0.24	0.65	0.24
Control Delay	34.9	24.4		31.8	15.9		33.0	15.1	3.9	33.2	21.8	4.2
Queue Delay	0.0	0.0		0.0	0.0		0.0	0.0	0.0	0.0	0.0	0.0
Total Delay	34.9	24.4		31.8	15.9		33.0	15.1	3.9	33.2	21.8	4.2
LOS	C	C		C	B		C	B	A	C	C	A
Approach Delay		28.4			22.7			16.3			19.8	
Approach LOS		C			C			B			B	

Intersection Summary	
Area Type: Other	
Cycle Length: 120	
Actuated Cycle Length: 68.1	
Natural Cycle: 85	
Control Type: Actuated-Uncoordinated	
Maximum v/c Ratio: 0.65	
Intersection Signal Delay: 19.5	Intersection LOS: B
Intersection Capacity Utilization 66.3%	ICU Level of Service C
Analysis Period (min) 15	

Splits and Phases: 24: Belle Terre Pkwy & Whiteview Pkwy

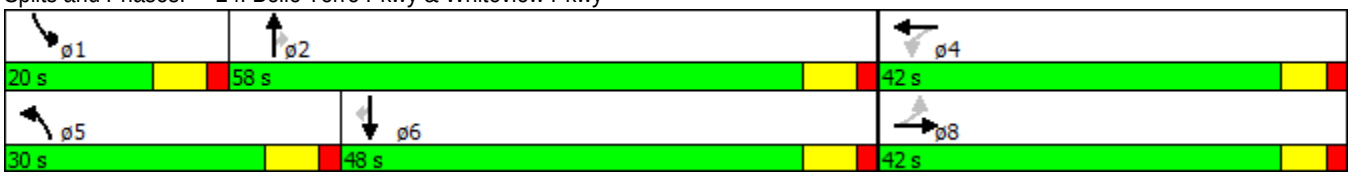

Intersection	
Int Delay, s/veh	1.4

Movement	EBL	EBR	NBL	NBT	SBT	SBR
Vol, veh/h	46	36	82	913	981	55
Conflicting Peds, #/hr	0	0	0	0	0	0
Sign Control	Stop	Stop	Free	Free	Free	Free
RT Channelized	-	None	-	None	-	None
Storage Length	0	-	175	-	-	-
Veh in Median Storage, #	1	-	-	0	0	-
Grade, %	0	-	-	0	0	-
Peak Hour Factor	97	97	97	97	97	97
Heavy Vehicles, %	0	3	1	1	1	0
Mvmt Flow	47	37	85	941	1011	57

Major/Minor	Minor2		Major1		Major2	
Conflicting Flow All	1680	534	1068	0	-	0
Stage 1	1040	-	-	-	-	-
Stage 2	640	-	-	-	-	-
Critical Hdwy	6.8	6.96	4.12	-	-	-
Critical Hdwy Stg 1	5.8	-	-	-	-	-
Critical Hdwy Stg 2	5.8	-	-	-	-	-
Follow-up Hdwy	3.5	3.33	2.21	-	-	-
Pot Cap-1 Maneuver	87	488	654	-	-	-
Stage 1	306	-	-	-	-	-
Stage 2	493	-	-	-	-	-
Platoon blocked, %				-	-	-
Mov Cap-1 Maneuver	76	488	654	-	-	-
Mov Cap-2 Maneuver	196	-	-	-	-	-
Stage 1	306	-	-	-	-	-
Stage 2	429	-	-	-	-	-

Approach	EB	NB	SB
HCM Control Delay, s	24.7	0.9	0
HCM LOS	C		

Minor Lane/Major Mvmt	NBL	NBT	EBLn1	SBT	SBR
Capacity (veh/h)	654	-	266	-	-
HCM Lane V/C Ratio	0.129	-	0.318	-	-
HCM Control Delay (s)	11.3	-	24.7	-	-
HCM Lane LOS	B	-	C	-	-
HCM 95th %tile Q(veh)	0.4	-	1.3	-	-

Intersection	
Int Delay, s/veh	1.7

Movement	WBL	WBR	NBT	NBR	SBL	SBT
Vol, veh/h	30	88	891	68	132	1006
Conflicting Peds, #/hr	0	0	0	0	0	0
Sign Control	Stop	Stop	Free	Free	Free	Free
RT Channelized	-	None	-	None	-	None
Storage Length	0	-	-	-	175	-
Veh in Median Storage, #	1	-	0	-	-	0
Grade, %	0	-	0	-	-	0
Peak Hour Factor	97	97	97	97	97	97
Heavy Vehicles, %	0	1	1	0	0	1
Mvmt Flow	31	91	919	70	136	1037

Major/Minor	Minor1		Major1		Major2	
Conflicting Flow All	1745	494	0	0	989	0
Stage 1	954	-	-	-	-	-
Stage 2	791	-	-	-	-	-
Critical Hdwy	6.8	6.92	-	-	4.1	-
Critical Hdwy Stg 1	5.8	-	-	-	-	-
Critical Hdwy Stg 2	5.8	-	-	-	-	-
Follow-up Hdwy	3.5	3.31	-	-	2.2	-
Pot Cap-1 Maneuver	79	524	-	-	707	-
Stage 1	339	-	-	-	-	-
Stage 2	412	-	-	-	-	-
Platoon blocked, %			-	-		-
Mov Cap-1 Maneuver	64	524	-	-	707	-
Mov Cap-2 Maneuver	183	-	-	-	-	-
Stage 1	339	-	-	-	-	-
Stage 2	333	-	-	-	-	-

Approach	WB	NB	SB
HCM Control Delay, s	20.3	0	1.3
HCM LOS	C		

Minor Lane/Major Mvmt	NBT	NBR	WBLn1	SBL	SBT
Capacity (veh/h)	-	-	356	707	-
HCM Lane V/C Ratio	-	-	0.342	0.192	-
HCM Control Delay (s)	-	-	20.3	11.3	-
HCM Lane LOS	-	-	C	B	-
HCM 95th %tile Q(veh)	-	-	1.5	0.7	-

Lane Group	WBL	WBR	NBT	NBR	SBL	SBT
Lane Configurations						
Volume (vph)	27	21	951	28	19	1111
Ideal Flow (vphpl)	1900	1900	1900	1900	1900	1900
Lane Width (ft)	12	12	12	12	12	12
Grade (%)	0%		0%			0%
Storage Length (ft)	0	0		390	500	
Storage Lanes	1	1		1	1	
Taper Length (ft)	25				50	
Satd. Flow (prot)	1805	1615	3574	1615	1805	3574
Flt Permitted	0.950				0.219	
Satd. Flow (perm)	1805	1615	3574	1615	416	3574
Right Turn on Red		Yes		Yes		
Satd. Flow (RTOR)		22		29		
Link Speed (mph)	30		45			45
Link Distance (ft)	362		2373			896
Travel Time (s)	8.2		36.0			13.6
Confl. Peds. (#/hr)						
Confl. Bikes (#/hr)						
Peak Hour Factor	0.96	0.96	0.96	0.96	0.96	0.96
Growth Factor	100%	100%	100%	100%	100%	100%
Heavy Vehicles (%)	0%	0%	1%	0%	0%	1%
Bus Blockages (#/hr)	0	0	0	0	0	0
Parking (#/hr)						
Mid-Block Traffic (%)	0%		0%			0%
Shared Lane Traffic (%)						
Lane Group Flow (vph)	28	22	991	29	20	1157
Turn Type	Prot	Prot	NA	Perm	pm+pt	NA
Protected Phases	4	4	6		5	2
Permitted Phases				6	2	
Detector Phase	4	4	6	6	5	2
Switch Phase						
Minimum Initial (s)	12.0	12.0	15.0	15.0	4.0	15.0
Minimum Split (s)	47.0	47.0	35.0	35.0	9.0	20.0
Total Split (s)	47.0	47.0	49.0	49.0	14.0	63.0
Total Split (%)	42.7%	42.7%	44.5%	44.5%	12.7%	57.3%
Maximum Green (s)	42.0	42.0	44.0	44.0	9.0	58.0
Yellow Time (s)	4.0	4.0	4.0	4.0	4.0	4.0
All-Red Time (s)	1.0	1.0	1.0	1.0	1.0	1.0
Lost Time Adjust (s)	0.0	0.0	0.0	0.0	0.0	0.0
Total Lost Time (s)	5.0	5.0	5.0	5.0	5.0	5.0
Lead/Lag			Lag	Lag	Lead	
Lead-Lag Optimize?			Yes	Yes	Yes	
Vehicle Extension (s)	5.0	5.0	3.0	3.0	3.0	3.0
Minimum Gap (s)	3.0	3.0	3.0	3.0	3.0	3.0
Time Before Reduce (s)	0.0	0.0	0.0	0.0	0.0	0.0
Time To Reduce (s)	0.0	0.0	0.0	0.0	0.0	0.0
Recall Mode	None	None	Min	Min	None	Min
Walk Time (s)	12.0	12.0	20.0	20.0		
Flash Dont Walk (s)	30.0	30.0	10.0	10.0		

Lane Group	WBL	WBR	NBT	NBR	SBL	SBT
Pedestrian Calls (#/hr)	0	0	0	0		
Act Effct Green (s)	12.8	12.8	35.2	35.2	34.3	37.1
Actuated g/C Ratio	0.27	0.27	0.73	0.73	0.71	0.77
v/c Ratio	0.06	0.05	0.38	0.02	0.04	0.42
Control Delay	19.1	9.9	7.0	3.7	4.5	5.2
Queue Delay	0.0	0.0	0.0	0.0	0.0	0.0
Total Delay	19.1	9.9	7.0	3.7	4.5	5.2
LOS	B	A	A	A	A	A
Approach Delay	15.0		6.9			5.2
Approach LOS	B		A			A

Intersection Summary	
Area Type: Other	
Cycle Length: 110	
Actuated Cycle Length: 48.3	
Natural Cycle: 95	
Control Type: Actuated-Uncoordinated	
Maximum v/c Ratio: 0.42	
Intersection Signal Delay: 6.2	Intersection LOS: A
Intersection Capacity Utilization 49.0%	ICU Level of Service A
Analysis Period (min) 15	

Splits and Phases: 27: Belle Terre Pkwy & School Entrance

Lane Group	WBL	WBR	NBT	NBR	SBL	SBT	ø4
Lane Configurations							
Volume (vph)	124	101	826	146	136	1006	
Ideal Flow (vphpl)	1900	1900	1900	1900	1900	1900	
Lane Width (ft)	12	12	12	12	12	12	
Grade (%)	0%		0%			0%	
Storage Length (ft)	275	0		0	175		
Storage Lanes	1	1		0	1		
Taper Length (ft)	25				50		
Satd. Flow (prot)	1787	1615	3497	0	1787	3574	
Flt Permitted	0.950				0.216		
Satd. Flow (perm)	1787	1615	3497	0	406	3574	
Right Turn on Red		Yes		Yes			
Satd. Flow (RTOR)		105	16				
Link Speed (mph)	30		45			45	
Link Distance (ft)	890		896			3685	
Travel Time (s)	20.2		13.6			55.8	
Confl. Peds. (#/hr)							
Confl. Bikes (#/hr)							
Peak Hour Factor	0.96	0.96	0.96	0.96	0.96	0.96	
Growth Factor	100%	100%	100%	100%	100%	100%	
Heavy Vehicles (%)	1%	0%	1%	0%	1%	1%	
Bus Blockages (#/hr)	0	0	0	0	0	0	
Parking (#/hr)							
Mid-Block Traffic (%)	0%		0%			0%	
Shared Lane Traffic (%)							
Lane Group Flow (vph)	129	105	1012	0	142	1048	
Turn Type	Prot	Prot	NA		pm+pt	NA	
Protected Phases	3	3	6		5	2	4
Permitted Phases					2		
Detector Phase	3	3	6		5	2	
Switch Phase							
Minimum Initial (s)	4.0	4.0	10.0		4.0	10.0	1.0
Minimum Split (s)	9.0	9.0	47.0		8.0	15.0	47.0
Total Split (s)	28.0	28.0	47.0		8.0	55.0	47.0
Total Split (%)	21.5%	21.5%	36.2%		6.2%	42.3%	36%
Maximum Green (s)	23.0	23.0	42.0		4.0	50.0	42.0
Yellow Time (s)	4.0	4.0	4.0		3.0	4.0	4.0
All-Red Time (s)	1.0	1.0	1.0		1.0	1.0	1.0
Lost Time Adjust (s)	0.0	0.0	0.0		0.0	0.0	
Total Lost Time (s)	5.0	5.0	5.0		4.0	5.0	
Lead/Lag	Lead	Lead	Lag		Lead		Lag
Lead-Lag Optimize?	Yes	Yes	Yes		Yes		Yes
Vehicle Extension (s)	3.0	3.0	3.0		3.0	3.0	0.2
Minimum Gap (s)	3.0	3.0	3.0		3.0	3.0	3.0
Time Before Reduce (s)	0.0	0.0	0.0		0.0	0.0	0.0
Time To Reduce (s)	0.0	0.0	0.0		0.0	0.0	0.0
Recall Mode	None	None	Max		None	Max	None
Walk Time (s)			12.0				12.0
Flash Dont Walk (s)			30.0				30.0

Lane Group	WBL	WBR	NBT	NBR	SBL	SBT	ø4
Pedestrian Calls (#/hr)			0				0
Act Effct Green (s)	10.3	10.3	42.1		51.1	50.1	
Actuated g/C Ratio	0.15	0.15	0.60		0.73	0.71	
v/c Ratio	0.49	0.32	0.48		0.38	0.41	
Control Delay	34.3	9.1	9.1		6.2	5.0	
Queue Delay	0.0	0.0	0.0		0.0	0.0	
Total Delay	34.3	9.1	9.1		6.2	5.0	
LOS	C	A	A		A	A	
Approach Delay	23.0		9.1			5.1	
Approach LOS	C		A			A	

Intersection Summary	
Area Type: Other	
Cycle Length: 130	
Actuated Cycle Length: 70.4	
Natural Cycle: 115	
Control Type: Semi Act-Uncoord	
Maximum v/c Ratio: 0.49	
Intersection Signal Delay: 8.5	Intersection LOS: A
Intersection Capacity Utilization 53.6%	ICU Level of Service A
Analysis Period (min) 15	

Splits and Phases: 28: Belle Terre Pkwy & Parkview Dr (S)

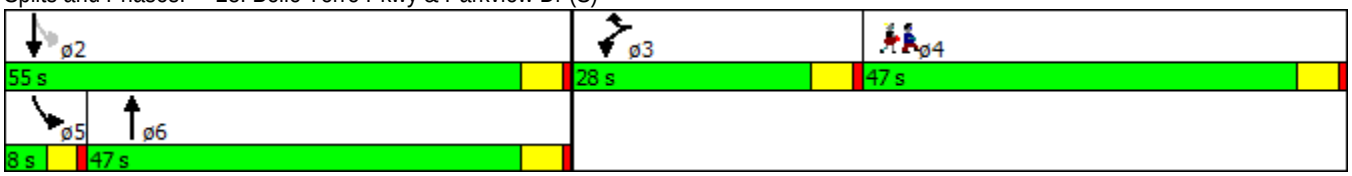

Intersection	
Int Delay, s/veh	1.9

Movement	SEL	SET	NWT	NWR	SWL	SWR
Vol, veh/h	167	1120	911	31	22	104
Conflicting Peds, #/hr	0	0	0	0	0	0
Sign Control	Free	Free	Free	Free	Stop	Stop
RT Channelized	-	None	-	None	-	None
Storage Length	450	-	-	425	0	-
Veh in Median Storage, #	-	0	0	-	1	-
Grade, %	-	0	0	-	0	-
Peak Hour Factor	93	93	93	93	93	93
Heavy Vehicles, %	0	0	2	0	5	0
Mvmt Flow	180	1204	980	17	24	112

Major/Minor	Major1		Major2		Minor2	
Conflicting Flow All	980	0	-	0	1941	490
Stage 1	-	-	-	-	980	-
Stage 2	-	-	-	-	961	-
Critical Hdwy	4.1	-	-	-	6.9	6.9
Critical Hdwy Stg 1	-	-	-	-	5.9	-
Critical Hdwy Stg 2	-	-	-	-	5.9	-
Follow-up Hdwy	2.2	-	-	-	3.55	3.3
Pot Cap-1 Maneuver	712	-	-	-	55	529
Stage 1	-	-	-	-	317	-
Stage 2	-	-	-	-	325	-
Platoon blocked, %		-	-	-		
Mov Cap-1 Maneuver	712	-	-	-	41	529
Mov Cap-2 Maneuver	-	-	-	-	144	-
Stage 1	-	-	-	-	317	-
Stage 2	-	-	-	-	243	-

Approach	SE	NW	SW
HCM Control Delay, s	1.5	0	20.8
HCM LOS			C

Minor Lane/Major Mvmt	NWT	NWR	SEL	SETSWLn1	
Capacity (veh/h)	-	-	712	-	361
HCM Lane V/C Ratio	-	-	0.252	-	0.375
HCM Control Delay (s)	-	-	11.8	-	20.8
HCM Lane LOS	-	-	B	-	C
HCM 95th %tile Q(veh)	-	-	1	-	1.7

Lane Group	SET	SER	NWL	NWT	NEL	NER
Lane Configurations						
Volume (vph)	1202	483	94	921	349	85
Ideal Flow (vphpl)	1900	1900	1900	1900	1900	1900
Lane Width (ft)	12	12	12	12	12	12
Grade (%)	0%			0%	0%	
Storage Length (ft)		325	175		225	225
Storage Lanes		1	1		1	1
Taper Length (ft)			100		100	
Satd. Flow (prot)	3574	1599	1805	3574	3467	1583
Flt Permitted			0.106		0.950	
Satd. Flow (perm)	3574	1599	201	3574	3467	1583
Right Turn on Red		Yes				Yes
Satd. Flow (RTOR)		498				88
Link Speed (mph)	45			45	45	
Link Distance (ft)	1316			361	1297	
Travel Time (s)	19.9			5.5	19.7	
Confl. Peds. (#/hr)						
Confl. Bikes (#/hr)						
Peak Hour Factor	0.97	0.97	0.97	0.97	0.97	0.97
Growth Factor	100%	100%	100%	100%	100%	100%
Heavy Vehicles (%)	1%	1%	0%	1%	1%	2%
Bus Blockages (#/hr)	0	0	0	0	0	0
Parking (#/hr)						
Mid-Block Traffic (%)	0%			0%	0%	
Shared Lane Traffic (%)						
Lane Group Flow (vph)	1239	498	97	949	360	88
Turn Type	NA	Perm	pm+pt	NA	Prot	Prot
Protected Phases	6		5	2	4	4
Permitted Phases		6	2			
Detector Phase	6	6	5	2	4	4
Switch Phase						
Minimum Initial (s)	20.0	20.0	4.0	20.0	6.0	6.0
Minimum Split (s)	26.8	26.8	11.0	27.0	31.8	31.8
Total Split (s)	39.0	39.0	15.0	54.0	36.0	36.0
Total Split (%)	43.3%	43.3%	16.7%	60.0%	40.0%	40.0%
Maximum Green (s)	32.2	32.2	8.0	47.0	29.2	29.2
Yellow Time (s)	4.8	4.8	4.8	4.8	4.8	4.8
All-Red Time (s)	2.0	2.0	2.2	2.2	2.0	2.0
Lost Time Adjust (s)	0.0	0.0	0.0	0.0	0.0	0.0
Total Lost Time (s)	6.8	6.8	7.0	7.0	6.8	6.8
Lead/Lag	Lag	Lag	Lead			
Lead-Lag Optimize?	Yes	Yes	Yes			
Vehicle Extension (s)	3.0	3.0	3.0	3.0	3.0	3.0
Minimum Gap (s)	3.0	3.0	3.0	3.0	3.0	3.0
Time Before Reduce (s)	0.0	0.0	0.0	0.0	0.0	0.0
Time To Reduce (s)	0.0	0.0	0.0	0.0	0.0	0.0
Recall Mode	Min	Min	None	Min	None	None
Walk Time (s)	5.0	5.0			10.0	10.0
Flash Dont Walk (s)	14.0	14.0			15.0	15.0

Lane Group	SET	SER	NWL	NWT	NEL	NER
Pedestrian Calls (#/hr)	0	0			0	0
Act Effct Green (s)	31.1	31.1	41.9	41.9	12.6	12.6
Actuated g/C Ratio	0.45	0.45	0.61	0.61	0.18	0.18
v/c Ratio	0.77	0.50	0.33	0.44	0.57	0.24
Control Delay	21.4	3.5	8.7	7.9	30.7	8.4
Queue Delay	0.0	0.0	0.0	0.0	0.0	0.0
Total Delay	21.4	3.5	8.7	7.9	30.7	8.4
LOS	C	A	A	A	C	A
Approach Delay	16.3			8.0	26.3	
Approach LOS	B			A	C	

Intersection Summary	
Area Type: Other	
Cycle Length: 90	
Actuated Cycle Length: 68.8	
Natural Cycle: 80	
Control Type: Actuated-Uncoordinated	
Maximum v/c Ratio: 0.77	
Intersection Signal Delay: 15.0	Intersection LOS: B
Intersection Capacity Utilization 65.6%	ICU Level of Service C
Analysis Period (min) 15	

Splits and Phases: 30: Pine Lakes Pkwy & Belle Terre Pkwy

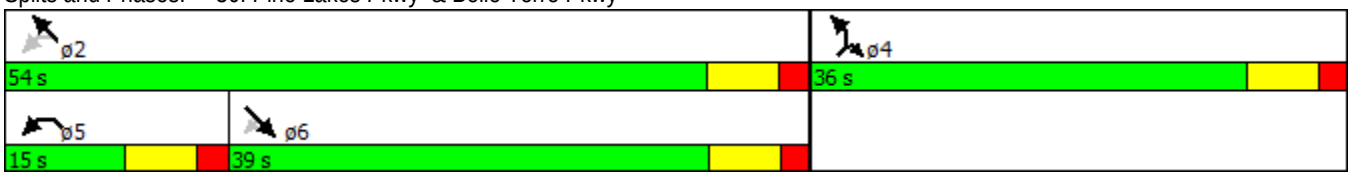

Appendix H

Crash Data

Belle Terre Boulevard/Parkway
September 1, 2012 to September 1, 2015

#	HSMV Report Number	Crash Date	Crash Time	Crash Street	Intersecting Street	Offset Distance	Crash Type	Vehicles	Fatalities	Injuries	Alcohol Related	Distraction Related	Drug Related	Weather Condition	Light Condition	Crash Type Detailed	Crash Type Dir	Crash Severity	Manner of Collision	Road Surf Cond	Bicyclists	Pedestrians
1	82348007	10/7/2012	12:54 AM	US HIGHWAY 1	BELLE TERRE BLVD	0	Off Road	1	0	1	N	N	N	Clear	Dark - Lighted	Off Road	E	Injury	Other	Dry	0	0
2	82348023	10/12/2012	3:10 PM	BELLE TERRE PARKWAY	MARKET AVENUE	500	Off Road	1	0	0	Y	N	N	Clear	Daylight	Off Road	N	Property Damage Only	Other	Dry	0	0
3	82348048	10/20/2012	11:06 PM	MARKET AVE	BELLE TERRE PKWY	150	Other	2	0	2	N	N	N	Clear	Dark - Lighted	Backed Into	E	Injury	Front to Rear	Dry	0	0
4	82348118	10/25/2012	6:34 PM	BELLE TERRE PKWY		0	Off Road	2	0	0	N	N	N	Clear	Dusk	Off Road		Property Damage Only	Sideswipe, Same Direction	Dry	0	0
5	82348134	11/13/2012	10:36 PM	PINE LAKES PARKWAY	BELLE TERRE PARKWAY	75	Rollover	1	0	1	N	N	N	Clear	Dark - Lighted	Rollover	N	Injury	Other	Dry	0	0
6	82348184	11/30/2012	5:53 PM	BELLE TERRE PARKWAY	POINT PLEASANT DRIVE	0	Bicycle	1	0	1	N	N	N	Clear	Dusk	Bicycle	E	Injury	Other	Dry	1	0
7	82348190	12/10/2012	9:05 PM	EAST STATE ROAD 100	BELLE TERRE PARKWAY	15	Rear End	2	0	2	N	N	N	Rain	Dark - Lighted	Rear End	E	Injury	Front to Rear	Wet	0	0
8	82348200	12/14/2012	6:59 PM	BELLE TERRE PARKWAY		0	Rear End	2	0	4	N	Y	N	Clear	Dark - Lighted	Rear End	S	Injury	Front to Rear	Dry	0	0
9	82348225	1/3/2013	5:48 PM	EAST SR 100	BELLE TERRE PKWY	500	Rear End	2	0	0	N	Y	N	Rain	Dusk	Rear End	E	Property Damage Only	Front to Rear	Wet	0	0
10	82348227	1/4/2013	3:25 PM	E STATE ROAD 100	BELLE TERRE PKWY	0	Unknown	3	0	4	N	N	N	Cloudy	Daylight	Unknown		Injury	Unknown	Dry	0	0
11	82348232	12/29/2012	10:22 AM	BELLE TERRE PARKWAY	WHITEVIEW PKWY	0	Rear End	2	0	0	N	N	N	Clear	Daylight	Rear End	N	Property Damage Only	Front to Rear	Wet	0	0
12	82348241	1/9/2013	3:35 PM	EAST STATE ROAD 100	BELLE TERRIL BOULEVARD	0	Rear End	2	0	1	N	N	N	Cloudy	Daylight	Rear End	W	Injury	Front to Rear	Dry	0	0
13	82348248	1/10/2013	7:31 AM	RYMFIRE DRIVE	BELLE TERRE PARKWAY	0	Rear End	2	0	0	N	N	N	Clear	Daylight	Rear End	E	Property Damage Only	Front to Rear	Dry	0	0
14	82348292	1/31/2013	7:39 PM	BELLE TERRE PARKWAY	WHIPPOORWILL DRIVE	0	Rear End	2	0	2	N	N	N	Clear	Dark - Not Lighted	Rear End	S	Injury	Front to Rear	Dry	0	0
15	82348313	1/28/2013	3:20 PM	BELLE TERRE PARKWAY	WHITEVIEW PARKWAY	0	Angle	2	0	1	N	N	N	Clear	Daylight	Right Angle	NE	Injury	Front to Rear	Dry	0	0
16	82348322	2/10/2013	4:20 PM	BELLE TERRE PKWY		0	Rear End	2	0	0	N	N	N	Clear	Daylight	Rear End	S	Property Damage Only	Front to Rear	Dry	0	0
17	82348377	3/4/2013	7:31 PM	BELLE TERRE PARKWAY	MARKET AVENUE	0	Right Turn	2	0	2	N	N	N	Clear	Dark - Lighted	Right/Through	W	Injury	Front to Front	Dry	0	0
18	82348386	3/12/2013	12:30 PM	E STATE ROAD 100 ENTRANCE EXIT		0	Rear End	2	0	0	N	Y	N	Cloudy	Daylight	Rear End	W	Property Damage Only	Front to Rear	Dry	0	0
19	82348387	3/12/2013	7:04 AM	BELLE TERRE BLVD	ZEBHULAS TRL	0	Off Road	1	0	0	N	N	N	Clear	Daylight	Off Road	S	Property Damage Only	Other	Dry	0	0
20	82348399	3/17/2013	3:42 PM	EAST STATE ROAD 100	BELLE TERRE PARKWAY	0	Rear End	2	0	0	N	Y	N	Clear	Daylight	Rear End	W	Property Damage Only	Front to Rear	Dry	0	0
21	82348404	3/10/2013	2:21 PM	BELLE TERR PKWY	STATE ROAD 100	0	Rear End	2	0	1	N	N	N	Clear	Daylight	Rear End	N	Injury	Angle	Dry	0	0
22	82348410	2/9/2013	12:54 PM	BELLE TERRE PARKWAY	WHITEVIEW PARKWAY	50	Rear End	3	0	1	N	N	N	Clear	Daylight	Rear End		Injury	Front to Rear	Dry	0	0
23	82348423	3/23/2013	4:47 PM	BELLE TERRE PARKWAY	CENTRAL AVENUE	0	Other	1	0	1	N	N	N	Rain	Daylight	Single Vehicle	N	Injury	Other	Wet	0	0
24	82348466	4/13/2013	12:06 PM	BELLE TERRE	POINT PLEASANT DR	0	Pedestrian	1	0	0	N	Y	N	Clear	Daylight	Pedestrian	W	Property Damage Only	Angle	Dry	1	0
25	82348497	4/12/2013	12:00 AM	BELLE TERRE PKWY	E SR 100	50	Sideswipe	2	0	0	N	N	N	Clear	Daylight	Same Direction Sideswipe	N	Property Damage Only	Sideswipe, Same Direction	Dry	0	0
26	82348499	4/22/2013	9:42 PM	BELLE TERRE PARKWAY	SR 100	0	Other	2	0	2	N	Y	N	Cloudy	Dark - Lighted	Backed Into	S	Injury	Front to Rear	Dry	0	0
27	82349231	3/20/2013	3:56 PM	BELLE TERRE PKWY	RYMFIRE DR	0	Rear End	2	0	0	N	N	N	Clear	Daylight	Rear End	S	Property Damage Only	Front to Rear	Dry	0	0
28	82349232	3/18/2013	3:54 PM	BELLE TERRE PKWY	PARKVIEW DR	0	Rear End	2	0	0	N	N	N	Clear	Daylight	Rear End	S	Property Damage Only	Front to Rear	Dry	0	0
29	82349248	4/29/2013	1:23 PM	SB BELLE TERRE PKWY S	EASTWOOD DR	0	Rear End	2	0	1	N	N	N	Cloudy	Daylight	Rear End	W	Injury	Front to Rear	Dry	0	0
30	82349256	5/21/2013	2:00 PM	SOUTHBOUND BELLE TERRE PARKWAY	WHIPPOORWILL DRIVE	0	Left Turn	2	0	1	N	N	N	Clear	Daylight	Left Entering	E	Injury	Angle	Dry	0	0
31	82349269	6/6/2013	11:37 AM	BELLE TERRE PKWY	PARKVIEW DRIVE	0	Rear End	2	0	0	N	Y	N	Rain	Daylight	Rear End	N	Property Damage Only	Front to Rear	Wet	0	0
32	82349291	7/5/2013	9:23 PM	ROYAL PALMS PARKWAY	BELLE TERRE PARKWAY	200	Rear End	4	0	2	N	N	N	Clear	Dark - Unknown Lighting	Rear End	W	Injury	Front to Rear	Dry	0	0
33	82349298	7/3/2013	5:24 PM	SR 100 EAST	BELLE TERRE PKWY	0	Rear End	2	0	1	N	N	N	Clear	Daylight	Rear End	W	Injury	Front to Rear	Dry	0	0
34	82349303	7/15/2013	8:29 AM	BELLE TERRE	CENTRAL AVE	680	Off Road	1	0	0	N	N	N	Cloudy	Daylight	Off Road	S	Property Damage Only	Other	Dry	0	0
35	82349347	7/24/2013	8:00 AM	WHITEVIEW PKWY	BELLE TERRE PARKWAY	0	Rear End	2	0	0	N	N	N	Clear	Dusk	Rear End	E	Property Damage Only	Front to Rear	Dry	0	0
36	82349351	7/31/2013	6:35 AM	BELLE TERRE PKWY	WHITE VIEW PKWY	0	Bicycle	1	0	1	N	N	N	Clear	Dawn	Bicycle	N	Injury	Sideswipe, Same Direction	Dry	1	0
37	82349352	7/27/2013	4:18 AM	BELLE TERRE PARKWAY UNKNOWN		0	Off Road	1	0	0	N	N	N	Clear	Dark - Lighted	Off Road	N	Property Damage Only	Rear to Rear	Dry	0	0
38	82349368	8/12/2013	6:12 AM	BELLE TERRE PARKWAY	RYMFIRE DRIVE	0	Rear End	2	0	0	N	N	N	Clear	Daylight	Rear End		Property Damage Only	Front to Rear	Dry	0	0
39	82349400	4/30/2013	8:27 AM	BELLE TERRE PARK	WHITE VIEW DRIVE	0	Rear End	2	0	0	N	N	N	Clear	Daylight	Rear End	N	Property Damage Only	Front to Rear	Dry	0	0
40	82349423	5/11/2013	4:19 PM	BELLE TERRE PARKWAY	EAST STATE ROAD 100	0	Sideswipe	2	0	0	Y	N	N	Cloudy	Daylight	Opposing Sideswipe	NS	Property Damage Only	Sideswipe, Opposite Direction	Dry	0	0
41	82349428	5/8/2013	6:40 AM	BELLE TERRE PKWY	CENTRAL AVE	200	Other	1	0	0	N	N	N	Clear	Daylight	Single Vehicle		Property Damage Only	Other	Dry	0	0
42	82349434	5/14/2013	10:32 PM	BELLE TERRE PARKWAY		0	Off Road	1	0	0	N	N	N	Clear	Dark - Lighted	Off Road	S	Property Damage Only	Other	Dry	0	0
43	82349442	5/19/2013	1:09 PM	BELLE TERRE PARKWAY	LAUGUNA FOREST TRAIL	0	Left Turn	2	0	1	N	Y	N	Cloudy	Daylight	Left Entering	S	Injury	Angle	Dry	0	0
44	82349455	4/22/2013	4:07 PM	EAST SR 100	BELLE TERRE PKWY	0	Rear End	2	0	0	N	N	N	Rain	Daylight	Rear End	W	Property Damage Only	Front to Rear	Wet	0	0
45	82349456	5/18/2013	11:22 AM	BELLE TERRE PKWY	ROYAL PALMS PKWY	100	Rear End	2	0	0	N	N	N	Clear	Daylight	Rear End	S	Property Damage Only	Front to Rear	Dry	0	0
46	82351693	9/12/2012	4:45 PM	RYMFIRE DRIVE	BELLE TERRE PARKWAY	0	Pedestrian	1	0	1	N	N	N	Clear	Daylight	Pedestrian	E	Injury	Other	Dry	0	1
47	82351806	9/6/2013	2:05 PM	SOUTH BELLE TERR PARKWAY	STATE ROAD 100	0	Rear End	2	0	0	N	Y	N	Rain	Daylight	Rear End	S	Property Damage Only	Front to Rear	Wet	0	0
48	82351818	9/20/2013	8:00 AM	BELLE TERRE PARKWAY SOUTH	SOUTH PINE LAKES PARKWAY	0	Left Turn	2	0	0	N	N	N	Cloudy	Daylight	Left Entering	N	Property Damage Only	Angle	Dry	0	0
49	82351823	9/27/2012	8:35 AM	BELLE TERRE BOULEVARD	STATE ROAD 100	5280	Rollover	1	0	0	N	N	N	Cloudy	Daylight	Rollover	S	Property Damage Only	Other	Other	0	0
50	82351825	9/27/2013	12:20 PM	BELLE TERRE PARKWAY NORTH	ROYAL PALMS PARKWAY	50	Rear End	2	0	0	N	N	N	Cloudy	Daylight	Rear End	N	Property Damage Only	Front to Rear	Dry	0	0
51	82351830	9/30/2013	4:09 PM	BELLE TERRE PKWY	PINE LAKE PKWY S	0	Head On	2	0	0	N	N	N	Clear	Daylight	Head On	S	Property Damage Only	Front to Rear	Dry	0	0
52	82351837	9/26/2012	10:03 AM	BELLE TERRE PARKWAY	WHITEVIEW	20	Rear End	2	0	0	N	N	N	Clear	Daylight	Rear End	N	Property Damage Only	Front to Rear	Dry	0	0
53	82351848	10/18/2013	2:06 PM	BELLE TERRE PARKWAY		0	Off Road	1	0	1	N	Y	N	Clear	Daylight	Off Road	N	Injury	Other	Dry	0	0
54	82351859	11/5/2013	3:13 PM	BELLE TERRE BOULEVARD	ZEBULAHS TRAIL	0	Rear End	2	0	3	N	N	N	Cloudy	Daylight	Rear End	S	Injury	Front to Rear	Wet	0	0
55	82351869	11/21/2013	2:48 PM	BELLE TERRE PKWY	PINE LAKES PKWY S	0	Unknown	2	0	3	N	N	N	Clear	Daylight	Unknown		Injury	Angle	Dry	0	0
56	82351877	12/5/2013	7:25 AM	BELLE TERRE PARKWAY	CENTRAL AVE	0	Rear End	2	0	1	N	N	N	Clear	Daylight	Rear End	S	Injury	Front to Rear	Dry	0	0
57	82351878	12/12/2013	7:43 AM	E SR 100	BELLE TERRE PKWY	0	Bicycle	1	0	1	N	Y	N	Clear	Daylight	Bicycle	E	Injury	Angle	Dry	1	0
58	82351889	1/13/2014	11:40 AM	NORTH BELLE TERRE PARKWAY	PINE GROVE DRIVE	0	Angle	2	0	0	N	N	N	Clear	Daylight	Right Angle	NW	Property Damage Only	Angle	Dry	0	0
59	82351960	11/19/2012	12:40 PM	BELLE TERRE PARKWAY	WHITEVIEW PARKWAY	0	Bicycle	1	0	1	N	N	N	Cloudy	Daylight	Bicycle	N	Injury	Angle	Dry	1	0
60	82351979	12/26/2012	12:36 PM	RYMFORE DRIVE EAST	BELLE TERRE PARKWAY	20	Rear End	2	0	1	N	N	N	Rain	Daylight	Rear End	E	Injury	Front to Rear	Wet	0	0
61	82351987	1/7/2013	6:16 PM	ROYAL PALMS PKWY	BELLE TERRE PKWY	0	Head On	2	0	1	N	N	N	Cloudy	Dark - Lighted	Head On	EW	Injury	Front to Front	Dry	0	0
62	82351999	2/4/2013	7:38 AM	BELLE TERRE PKWY	PINE GROVE DR	0	Rear End	2	0	3	N	N	N	Clear	Daylight	Rear End	S	Injury	Front to Rear	Dry	0	0
63	82352104	5/14/2013	12:30 PM	BELLE TERRE PKWY	SR 100	300	Rear End	2	0	0	N	N	N	Clear	Daylight	Rear End	W	Property Damage Only	Front to Rear	Dry	0	0
64	82352245	5/1/2014	10:00 AM	BELLE TERRE PKWY	STATE ROAD 100	70	Other	2	0	0	N	N	N	Clear	Daylight	Backed Into	S	Property Damage Only	Front to Rear	Dry	0	0
65	82524342	11/10/2012	1:04 PM	EAST MOODY BOULEVARD		0	Left Turn	2	0	1	N	N	N	Clear	Daylight	Left Entering	W	Injury	Front to Rear	Dry	0	0
66	82823518	9/28/2012	9:04 PM	BELLE TERRE PKWY	WHITEVIEW PKWY	326	Rear End	4	1	6	Y	N	N	Clear	Dark - Not Lighted	Rear End	N	Fatality	Front to Rear	Dry	0	0
67	82823523	10/22/2012	7:00 AM	PINE GROVE DRIVE	BELLE TERRE PKWY	5	Bicycle	1	0	1	N	N	N	Clear	Daylight	Bicycle	W	Injury	Other	Dry	1	0
68	82856066	2/17/2013	12:13 AM	BELLE TERRE BLVD	SR100	10	Pedestrian	1	0	1	Y	N	N	Clear	Dark - Lighted	Pedestrian	N	Injury	Other	Dry	0	1
69	82875327	1/7/2013	9:55 PM	BELLE TERRE PARKWAY	PARKVIEW DRIVE	0	Left Turn	2	0	2	N	N	N	Clear	Dark - Not Lighted	Left Rear	N	Injury	Angle	Dry	0	0
70	82892769	12/23/2012	5:18 PM	5100 STATE ROAD 100	BELLE TERRE PARKWAY	0	Rear End	2	0	5	N	N	N	Clear	Daylight	Rear End	W	Injury	Front to Rear	Dry	0	0
71	82894431	5/10/2013	2:09 PM	BELLE TERRE PKWY	SR100	20	Rear End	2	0	1	N	N	N	Clear	Daylight	Rear End	S	Injury	Front to Rear	Dry	0	0
72	83180568	11/10/2012	6:15 PM	ROYAL PALMS PKWY	BELLE TERRE PKWY	0	Left Turn	2	0	3	N	N	N	Clear	Dark - Lighted	Left Entering	E	Injury	Angle	Dry	0	0
73	83183434	10/28/2012	4:20 AM	BELLE TERRE PKWY	EASTWOOD DR	700	Rollover	1	0	0	N	N	N	Clear	Dark - Not Lighted	Rollover	N	Property Damage Only	Other	Dry	0	0
74	83227423	2/12/2014	9:38 AM	BELLE TERRE PARKWAY	ROYAL PALMS PARKWAY	127	Other	1	1	0	N	N	N	Cloudy	Daylight	Single Vehicle	N	Fatality	Other	Dry	0	0
75	83254634	3/27/2013	9:15 PM	STATE ROAD 100	BELLE TERRE PKWY	0	Left Turn	2	0	0	N	N	N	Clear	Dark - Not Lighted	Left Entering	E	Property Damage Only	Angle	Dry	0	0
76	83283624	3/17/2013	2:10 PM	RYMFIRE DR.	BELLE TERRE PARKWAY	750	Rollover	1	0	1	Y	N	N	Clear	Daylight	Rollover	E	Injury	Other	Dry	0	0
77	83289315	5/29/2013	1:30 AM	BELLE TERRE PKWY	EASTWOOD DRIVE	894	Off Road	1	0	1	N	N	N	Clear	Dark - Lighted	Off Road	N	Injury	Other	Dry	0	0
78	83305632	1/31/2014	8:20 PM	STATE ROAD 100	BELLE TERRE PARKWAY	2000	Left Turn	2	0	2	N	N	N	Clear	Dark - Lighted	Left Rear	N	Injury	Angle	Dry	0	0
79	83306327	4/2/2013	2:38 PM	BELLE TERRE BLVD	STATE ROAD 100	264	Unknown	2	1	1	N	N	N	Clear	Daylight	Unknown		Fatality	Angle	Dry	0	0

Belle Terre Boulevard/Parkway
September 1, 2012 to September 1, 2015

#	HSMV Report Number	Crash Date	Crash Time	Crash Street	Intersecting Street	Offset Distance	Crash Type	Vehicles	Fatalities	Injuries	Alcohol Related	Distraction Related	Drug Related	Weather Condition	Light Condition	Crash Type Detailed	Crash Type Dir	Crash Severity	Manner of Collision	Road Surf Cond	Bicyclists	Pedestrians
80	83306342	6/18/2013	8:31 PM	PINE GROVE DRIVE	BELLE TERRE PARKWAY	0	Other	1	0	1	N	N	N	Clear	Daylight	Single Vehicle	W	Injury	Angle	Dry	1	0
81	83306366	11/15/2013	5:51 PM	BELLE TERRE PARKWAY	PONCE DELEON DRIVE	0	Left Turn	2	0	4	N	N	N	Rain	Dark - Not Lighted	Left Entering	S	Injury	Angle	Wet	0	0
82	83306369	12/9/2013	1:28 PM	BELLE TERRE PARKWAY	ROYAL PALMS PARKWAY	246	Rear End	4	0	7	N	N	N	Clear	Daylight	Rear End	S	Injury	Front to Rear	Dry	0	0
83	83306396	7/4/2014	9:19 PM	BELLE TERRE PARKWAY	CENTRAL AVENUE	0	Rear End	2	0	3	N	Y	N	Clear	Dark - Lighted	Rear End	N	Injury	Front to Rear	Dry	0	0
84	83315182	10/31/2014	5:00 AM	BELLE TERRE PARKWAY	PONCE DELEON DR	350	Bicycle	1	0	1	N	N	N	Clear	Dark - Not Lighted	Bicycle	N	Injury	Front to Rear	Dry	1	0
85	83317261	1/4/2014	2:00 AM	BELLE TERRE PKWY	PINE LAKES PKWY	75	Off Road	1	0	1	Y	N	N	Clear	Dark - Not Lighted	Off Road	N	Injury	Other	Dry	0	0
86	83336319	10/31/2013	2:19 PM	SR 100	BELLE TERRE PARKWAY	1035	Left Turn	3	0	3	N	N	N	Cloudy	Daylight	Left Rear	N	Injury	Other	Dry	0	0
87	83336320	10/31/2013	2:19 PM	SR 100	BELLE TERRE PARKWAY	1035	Other	3	0	8	N	N	N	Cloudy	Daylight	Other	W	Injury	Other	Dry	0	0
88	83623074	11/6/2012	4:15 PM	BELLE TERRE PKWY	CENTRAL AVE	0	Rear End	2	0	0	N	Y	N	Clear	Daylight	Rear End	N	Property Damage Only	Front to Rear	Dry	0	0
89	83623336	12/13/2012	2:40 PM	BELLE TERRE BOULEVARD	SR 100	0	Rear End	2	0	0	N	N	N	Cloudy	Daylight	Rear End	N	Property Damage Only	Front to Rear	Wet	0	0
90	83623383	12/21/2012	4:02 PM	BELLE TERRE PARKWAY	ROYAL PALMS PARKWAY	0	Angle	2	0	1	N	N	N	Clear	Daylight	Right Angle	SW	Injury	Angle	Dry	0	0
91	83623459	1/10/2013	12:03 PM	BELLE TERRE PKWY	PARKVIEW DRIVE SOUTH	20	Rear End	2	0	1	N	Y	N	Clear	Daylight	Rear End	N	Injury	Front to Rear	Dry	0	0
92	83654895	11/2/2013	11:45 AM	BELLE TERRE PARKWAY	PONCE DE LEON DRIVE	50	Rear End	2	0	2	N	N	N	Rain	Daylight	Rear End	S	Injury	Front to Rear	Wet	0	0
93	83696513	1/17/2014	11:58 PM	BELLE TERRE PKWY	PINE GROVE DR	20	Left Turn	2	1	3	Y	N	Y	Clear	Dark - Not Lighted	Left Entering	S	Fatality	Angle	Dry	0	0
94	83722263	12/28/2013	12:05 PM	STATE ROAD 100	BELLE TERRE BLVD	15	Rear End	2	0	4	N	N	N	Rain	Daylight	Rear End	E	Injury	Front to Rear	Wet	0	0
95	83804018	7/13/2014	9:45 AM	BELLE TERRE PKWY	PINE GROVE DR	0	Angle	2	1	0	N	N	N	Cloudy	Daylight	Right Angle	NW	Fatality	Angle	Dry	0	0
96	83804050	11/20/2014	1:00 PM	STATE ROAD 100	BELLE TERRE PKWY	0	Rear End	2	0	0	N	N	N	Clear	Daylight	Rear End	E	Property Damage Only	Front to Rear	Dry	0	0
97	83804053	12/3/2014	11:18 AM	US 1	BELLE TERRE BLVD	0	Left Turn	2	0	0	N	N	N	Clear	Daylight	Left Entering	N	Property Damage Only	Angle	Dry	0	0
98	83806347	8/22/2014	9:00 PM	PINE LAKES PARKWAY	BELLE TERRE PARKWAY	67	Rear End	2	0	4	Y	N	N	Clear	Dark - Lighted	Rear End	E	Injury	Front to Rear	Dry	0	0
99	83821727	11/8/2014	4:48 PM	BELLE TERRE PARKWAY	STATE ROAD 100	0	Bicycle	1	0	1	N	N	N	Clear	Daylight	Bicycle	S	Injury	Other	Dry	1	0
100	83821730	11/21/2014	6:00 PM	BELLE TERRE PARKWAY	ROYAL PALMS PARKWAY	500	Rear End	5	0	8	N	N	N	Clear	Dark - Not Lighted	Rear End	S	Injury	Front to Rear	Dry	0	0
101	83821773	8/20/2015	5:35 PM	BELLE TERRE PARKWAY	ROYAL PALMS PARKWAY	0	Rear End	2	0	0	N	N	N	Cloudy	Daylight	Rear End	N	Property Damage Only	Front to Rear	Dry	0	0
102	83823430	12/9/2014	2:35 PM	BELLE TERRE BLVD	ZEBULAHS TRAIL	0	Angle	2	0	1	N	N	N	Clear	Daylight	Right Angle	NE	Injury	Angle	Dry	0	0
103	83824559	1/26/2015	4:46 PM	BELLE TERRE PARKWAY	ROYAL PALMS PARKWAY	1110	Off Road	1	1	0	N	N	N	Clear	Dusk	Off Road	N	Fatality	Other	Dry	0	0
104	83879063	8/8/2013	12:40 PM	EAST MOODY BOULEVARD		0	Other	1	0	1	N	N	N	Clear	Daylight	Single Vehicle	S	Injury	Front to Front	Dry	1	0
105	83879084	10/3/2013	11:06 AM	E MOODY BLVD		0	Rear End	2	0	1	N	N	N	Clear	Daylight	Rear End	W	Injury	Front to Rear	Dry	0	0
106	84018017	8/19/2013	7:33 AM	BELLE TERRE PKWY	EASTWOOD DR	100	Angle	3	0	1	N	N	N	Clear	Daylight	Right Angle	SW	Injury	Front to Rear	Dry	0	0
107	84018167	6/5/2013	12:09 PM	BELLE TERRE PKWY		0	Rear End	2	0	1	N	Y	N	Clear	Daylight	Rear End	S	Injury	Front to Rear	Dry	0	0
108	84018169	6/7/2013	10:11 AM	BELLE TERRE BLVD		0	Unknown	2	0	1	N	N	N	Clear	Daylight	Unknown		Injury	Angle	Dry	0	0
109	84018181	6/12/2013	6:05 AM	WHIPPOORWILL DR	BELLE TERRE PKWY	0	Off Road	1	0	1	Y	N	N	Clear	Daylight	Off Road	W	Injury	Other	Dry	0	0
110	84018193	6/18/2013	6:18 PM	BELLE TERRE PARKWAY	PARKVIEW DRIVE	500	Off Road	1	0	0	N	N	N	Other	Unknown	Off Road		Property Damage Only	Unknown	Dry	0	0
111	84018255	7/21/2013	10:40 PM	EAST STATE ROAD 100	BELLE TERRE PARKWAY	0	Other	1	0	1	N	N	N	Cloudy	Dark - Lighted	Single Vehicle	W	Injury	Other	Wet	0	0
112	84018299	8/30/2013	4:24 PM	MARKET AVE	BELLE TERRE PKWY	0	Left Turn	2	0	0	N	N	N	Clear	Daylight	Left Entering	W	Property Damage Only	Angle	Dry	0	0
113	84018358	10/8/2013	9:39 PM	US HIGHWAY 1	BELLE TERRE BOULEVARD	5280	Other	1	0	1	Y	N	N	Rain	Dark - Lighted	Single Vehicle	N	Injury	Other	Wet	0	0
114	84018366	10/19/2013	6:50 AM	BELLE TERRE PARKWAY	EAST STATE ROAD 100	50	Other	2	0	2	N	N	N	Clear	Dawn	Other	S	Injury	Angle	Dry	0	0
115	84018367	10/15/2013	7:12 AM	BELLE TERRE PKWY	PARKVIEW DR	0	Off Road	1	0	0	N	N	N	Rain	Dawn	Off Road	S	Property Damage Only	Unknown	Wet	0	0
116	84018440	12/10/2013	5:58 PM	BELLE TERRE BOULEVARD	ROYAL PALMS PARKWAY	0	Rear End	3	0	1	N	N	N	Clear	Dusk	Rear End	N	Injury	Front to Rear	Dry	0	0
117	84018444	12/3/2013	12:40 PM	BELLE TERR PKWY	EAST STATE ROAD 100	0	Unknown	2	0	1	N	N	N	Clear	Daylight	Unknown		Injury	Angle	Dry	0	0
118	84018463	12/27/2013	6:24 PM	BELLE TERRE PARKWAY	CITATION BLVD	0	Other	1	0	1	N	N	N	Clear	Dark - Lighted	Single Vehicle	W	Injury	Front to Rear	Dry	0	0
119	84018507	2/2/2014	5:34 AM	CITATION BLVD	BELLE TERRE BLVD	0	Other	1	0	1	N	N	N	Fog, Smog, Smoke	Dark - Lighted	Single Vehicle	W	Injury	Other	Wet	0	0
120	84018524	2/11/2014	7:45 AM	BELLE TERRE BLVD	KARAS TRL	0	Other	1	0	0	N	N	N	Clear	Daylight	Single Vehicle	N	Property Damage Only	Other	Dry	0	0
121	84018553	3/7/2014	6:50 PM	BELLE TERRE BOULEVARD	ZAUN TRAIL	0	Sideswipe	3	0	0	N	N	N	Cloudy	Dark - Lighted	Same Direction Sideswipe	N	Property Damage Only	Sideswipe, Same Direction	Dry	0	0
122	84018575	3/18/2014	7:39 AM	BELLE TERRE PRWY	E SR 100	0	Other	2	0	0	N	N	N	Clear	Daylight	Parked Vehicle	S	Property Damage Only	Front to Rear	Dry	0	0
123	84018591	4/2/2014	10:56 AM	BELLE TERRE PARKWAY	EAST STATE ROAD 100	0	Bicycle	1	0	1	N	N	N	Clear	Daylight	Bicycle	S	Injury	Angle	Dry	1	0
124	84018598	4/9/2014	4:25 PM	EAST STATE ROAD 100 RD	BELLE TERRE PKWY	0	Rear End	2	0	0	N	Y	N	Clear	Daylight	Rear End	W	Property Damage Only	Front to Rear	Dry	0	0
125	84018606	4/17/2014	11:29 PM	CITATION BOULEVARD	BELLE TERRE BOULEVARD	0	Other	1	0	1	N	Y	N	Clear	Dark - Lighted	Single Vehicle	W	Injury	Other	Dry	0	0
126	84018612	5/2/2014	2:04 PM	BELLE TERRE PARKWAY	EASTHAMPTON BLVD	30	Rear End	2	0	0	N	N	N	Cloudy	Daylight	Rear End	N	Property Damage Only	Front to Rear	Wet	0	0
127	84018641	7/8/2014	10:47 PM	BELLE TERRE PKWY	POINT PLEASANT DR	0	Angle	2	0	0	N	N	N	Clear	Dark - Lighted	Right Angle	NW	Property Damage Only	Rear to Rear	Dry	0	0
128	84018660	9/18/2014	8:45 PM	BELLE TERRE PARKWAY	EASTWOOD DRIVE	0	Left Turn	2	0	0	Y	N	N	Cloudy	Dark - Not Lighted	Left Rear	S	Property Damage Only	Sideswipe, Same Direction	Dry	0	0
129	84018672	11/28/2014	4:34 PM	BELLE TERRE PARKWAY	PONCE DELEON DRIVE	0	Left Turn	2	0	3	N	N	N	Clear	Daylight	Left Entering	W	Injury	Angle	Dry	0	0
130	84018686	3/19/2015	8:12 AM	BELLE TERRE PKWY	PINE LAKES PKWY	0	Rear End	3	0	0	N	N	N	Clear	Daylight	Rear End	N	Property Damage Only	Front to Rear	Dry	0	0
131	84019225	8/18/2013	6:28 PM	BELLE TERRE BLVD	ROYAL PALMS BOULEVARD	0	Rear End	2	0	0	N	N	N	Clear	Daylight	Rear End	S	Property Damage Only	Front to Rear	Dry	0	0
132	84019226	8/19/2013	1:36 PM	PONCE DELEON DR	BELLE TERRE PKWY	0	Other	1	0	1	N	N	N	Rain	Daylight	Single Vehicle	W	Injury	Angle	Wet	1	0
133	84019297	10/9/2013	7:44 PM	BELLE TERRE PARKWAY		0	Angle	2	0	0	N	N	N	Clear	Dark - Not Lighted	Right Angle	NW	Property Damage Only	Angle	Dry	0	0
134	84019339	11/7/2013	10:29 PM	BELLE TERRE PARKWAY	PINE LAKES PARKWAY	0	Rear End	2	0	1	N	N	N	Clear	Dark - Lighted	Rear End		Injury	Front to Rear	Dry	0	0
135	84019363	11/23/2013	12:48 PM	BELLE TERRE PARKWAY	ROYAL PALMS PARKWAY	200	Rear End	2	0	0	N	N	N	Clear	Daylight	Rear End	S	Property Damage Only	Front to Rear	Dry	0	0
136	84019373	11/26/2013	7:38 AM	BELLE TERRE PARKWAY	RYMFIRE DR	15	Off Road	1	0	0	N	N	N	Rain	Daylight	Off Road	N	Property Damage Only	Other	Wet	0	0
137	84019397	12/10/2013	4:33 PM	BELLE TERRE PKWY	ROYAL PALMS PKWY	0	Rear End	2	0	1	N	Y	N	Rain	Daylight	Rear End	S	Injury	Front to Rear	Wet	0	0
138	84019421	12/23/2013	3:54 PM	BELLE TERRE PARKWAY	RYMFIRE DRIVE	0	Rear End	2	0	1	N	N	N	Clear	Daylight	Rear End	S	Injury	Front to Rear	Dry	0	0
139	84019434	12/28/2013	11:45 AM	BELLE TERRE PKWY	ROYAL PALMS PKWY	0	Rear End	2	0	0	N	Y	N	Clear	Daylight	Rear End	N	Property Damage Only	Front to Rear	Dry	0	0
140	84019450	1/11/2014	7:55 PM	BELLE TERRE PARKWAY	PINE LAKES PARKWAY	0	Left Turn	2	0	1	N	N	N	Rain	Dark - Lighted	Left Entering	N	Injury	Angle	Wet	0	0
141	84019473	1/31/2014	7:37 PM	BELLE TERRE PARKWAY	PINE GROVE DRIVE	0	Rear End	2	0	0	N	N	N	Other	Unknown	Rear End		Property Damage Only	Unknown	Unknown	0	0
142	84019507	3/3/2014	5:56 PM	PINE GROVE DRIVE	BELLE TERRE PARKWAY	0	Sideswipe	3	0	1	N	N	N	Clear	Dusk	Opposing Sideswipe		Injury	Sideswipe, Opposite Direction	Dry	0	0
143	84019516	3/7/2014	8:01 PM	BELLE TERRE PARKWAY SB	RYMFIRE DRIVE	0	Rear End	2	0	1	N	N	N	Clear	Dark - Not Lighted	Rear End		Injury	Front to Rear	Dry	0	0
144	84019564	4/3/2014	5:48 PM	BELLE TERRE	CENTRAL AVENUE	0	Rear End	2	0	1	N	N	N	Clear	Daylight	Rear End	N	Injury	Front to Rear	Dry	0	0
145	84019610	5/8/2014	11:01 PM	BELLE TERRE PARKWAY	ROYAL PALMS PARKWAY	500	Sideswipe	2	0	2	Y	N	N	Clear	Dark - Lighted	Same Direction Sideswipe	N	Injury	Sideswipe, Same Direction	Dry	0	0
146	84019615	5/26/2014	6:57 PM	BELLE TERRE PARKWAY	WHITE VIEW PARKWAY	0	Other	1	0	1	Y	N	Y	Clear	Daylight	Single Vehicle	E	Injury	Other	Dry	0	0
147	84019664	8/4/2014	10:46 PM	BELLE TERRE PKWY	PINE LAKES PKWY	0	Head On	2	0	2	N	N	N	Clear	Daylight	Head On		Injury	Front to Rear	Dry	0	0
148	84019685	9/20/2014	12:22 AM	BELLE TERRE PARKWAY	PINE GROVE DRIVE	0	Angle	2	0	2	N	Y	N	Clear	Daylight	Right Angle	NW	Injury	Front to Rear	Dry	0	0
149	84019781	2/17/2015	7:55 PM	BELLE TERRE PARKWAY		0	Rear End	2	0	0	N	N	N	Rain	Dark - Lighted	Rear End	N	Property Damage Only	Front to Rear	Wet	0	0
150	84019808	5/6/2015	8:09 PM	BELLE TERRE PKWY	WHIPPOORWILL DR	0	Sideswipe	2	0	1	N	N	N	Clear	Dark - Not Lighted	Same Direction Sideswipe		Injury	Sideswipe, Same Direction	Dry	0	0
151	84556495	3/18/2015	9:18 PM	BELLE TERRE PKWY	WHITEVIEW PKWY	8	Rear End	2	0	3	N	N	N	Clear	Dark - Lighted	Rear End	S	Injury	Front to Rear	Dry	0	0
152	84576131	1/9/2014	7:52 AM	BELLE TERRE PARKWAY	PARKVIEW DRIVE SOUTH	0	Rear End	2	0	0	N	N	N	Rain	Daylight	Rear End		Property Damage Only	Front to Rear	Wet	0	0
153	84576152	1/14/2014	4:51 PM	BELLE TERRE PKWY	PINE GROVE DR	500	Sideswipe	3	0	0	N	Y	N	Cloudy	Daylight	Same Direction Sideswipe	N	Property Damage Only	Sideswipe, Same Direction	Dry	0	0
154	84576177	1/10/2014	3:37 PM	EAST SR 100 HIGHWAY		0	Rear End	2	0	1	N	N	N	Clear	Daylight	Rear End	S	Injury	Front to Rear	Dry	0	0
155	84576267	2/1/2014	4:05 PM	EAST MOODY BLVD	BELLE TERRE PKWY	0	Rear End	2	0	0	N	N	N	Cloudy	Daylight	Rear End	W	Property Damage Only	Front to Rear	Wet	0	0
156	84576295	2/10/2014	7:40 AM	BELLE TERRE PKWY	PINE GROVE DRIVE	0	Left Turn	2	0	2	N	N	N	Clear	Daylight	Left Entering	W	Injury	Angle	Dry	0	0
157	84576401	2/28/2014	2:17 PM	EAST SR 100 HIGHWAY		0	Rear End	4	0	1	N	N	N	Clear	Daylight	Rear End	W	Injury	Front to Rear	Dry	0	0
158	84576580	3/28/2014	1:35 PM	PINE GROVE DRIVE	BELLE TERRE PARKWAY	0	Other	1	0	1	N	N	N	Clear	Daylight	Single Vehicle	W	Injury	Other	Dry	1	0

Belle Terre Boulevard/Parkway
September 1, 2012 to September 1, 2015

#	HSMV Report Number	Crash Date	Crash Time	Crash Street	Intersecting Street	Offset Distance	Crash Type	Vehicles	Fatalities	Injuries	Alcohol Related	Distraction Related	Drug Related	Weather Condition	Light Condition	Crash Type Detailed	Crash Type Dir	Crash Severity	Manner of Collision	Road Surf Cond	Bicyclists	Pedestrians
159	84576585	3/28/2014	2:28 PM	BELLE TERRE PKWY		0	Rear End	2	0	0	N	N	N	Clear	Daylight	Rear End	S	Property Damage Only	Front to Rear	Dry	0	0
160	84576634	4/3/2014	12:26 PM	BELLE TERRE PKWY	PINE GROVE DR	0	Rear End	2	0	0	N	N	N	Clear	Daylight	Rear End	N	Property Damage Only	Front to Rear	Dry	0	0
161	84576714	4/11/2014	7:08 PM	BELLE TERRE PARKWAY	ROYAL PALMS PARKWAY	0	Rear End	2	0	1	Y	N	N	Clear	Dusk	Rear End	N	Injury	Front to Rear	Dry	0	0
162	84576726	4/13/2014	2:37 PM	BELLE TERRE BLVD	LAGUNA FOREST TRL	0	Sideswipe	2	0	2	N	N	N	Cloudy	Daylight	Opposing Sideswipe	NS	Injury	Angle	Dry	0	0
163	84576844	4/24/2014	3:26 PM	BELLE TERRE PARKWAY	PINE GROVE DRIVE	0	Left Turn	2	0	0	N	N	N	Clear	Daylight	Left Entering	W	Property Damage Only	Angle	Dry	0	0
164	84576887	4/29/2014	6:36 AM	CENTRAL AVENUE	BELLE TERRE PARKWAY	500	Other	1	0	0	N	N	N	Cloudy	Dawn	Single Vehicle	W	Property Damage Only	Other	Dry	0	0
165	84576924	4/30/2014	10:30 AM	BELLE TERRE PKWY	ROYAL PALMS PKWY	0	Left Turn	2	0	3	N	N	N	Clear	Daylight	Left Rear	E	Injury	Angle	Dry	0	0
166	84577074	5/24/2014	7:11 AM	BELLE TERRE PARKWAY	WHITE VIEW PARK	0	Head On	2	0	0	N	N	N	Clear	Daylight	Head On	N	Property Damage Only	Front to Rear	Dry	0	0
167	84577096	5/22/2014	3:00 PM	BELLE TERRE PKWY		0	Other	2	0	0	N	N	N	Clear	Daylight	Backed Into		Property Damage Only	Rear to Rear	Dry	0	0
168	84577098	5/24/2014	10:30 AM	NORTH BELLE TERRE PARKWAY	PARKVIEW DRIVE SOUTH	0	Left Turn	2	0	0	N	N	N	Clear	Daylight	Left Leaving	W	Property Damage Only	Angle	Dry	0	0
169	84577269	6/9/2014	1:04 PM	BELLE TERRE PKWY	WHITE VIEW PKWY	0	Rear End	2	0	0	N	N	N	Clear	Daylight	Rear End	N	Property Damage Only	Front to Rear	Dry	0	0
170	84577317	6/19/2014	8:21 AM	BELLE TERRE PARKWAY	ROYAL PALMS PARKWAY	0	Rear End	2	0	3	N	N	N	Clear	Daylight	Rear End	N	Injury	Front to Rear	Dry	0	0
171	84577376	6/25/2014	8:15 PM	ROYAL PALMS PKWY	BELLE TERRE PKWY	0	Rear End	2	0	1	N	Y	N	Clear	Dusk	Rear End	E	Injury	Front to Rear	Dry	0	0
172	84577403	6/30/2014	5:24 PM	BELLE TERRE PARKWAY	EASTWOOD DRIVE	0	Sideswipe	2	0	0	N	N	N	Clear	Daylight	Same Direction Sideswipe	N	Property Damage Only	Sideswipe, Same Direction	Dry	0	0
173	84577418	6/25/2014	7:41 AM	BELLE TERRE PARKWAY	WHIPPOORWILL DR	0	Rear End	2	0	0	N	N	N	Clear	Daylight	Rear End	E	Property Damage Only	Front to Rear	Dry	0	0
174	84577423	7/1/2014	8:18 PM	BELLE TERRE PARKWAY	RYMFIRE DRIVE	0	Rear End	2	0	2	N	N	N	Clear	Dusk	Rear End	S	Injury	Front to Rear	Dry	0	0
175	84577611	7/15/2014	9:06 PM	PINE LAKES PARKWAY NORTH	BELLE TERRE PARKWAY	0	Other	2	0	0	N	N	N	Cloudy	Dark - Lighted	Other	N	Property Damage Only	Rear to Side	Wet	0	0
176	84577661	7/25/2014	11:50 PM	CENTRAL AVENUE	BELLE TERRE PARK	0	Off Road	1	0	0	N	Y	N	Clear	Dusk	Off Road	W	Property Damage Only	Other	Dry	0	0
177	84577687	7/16/2014	12:33 PM	BELLE TERRE PARKWAY	RYMFIRE DRIVE	300	Other	2	0	1	N	N	N	Cloudy	Daylight	Parked Vehicle	S	Injury	Front to Rear	Dry	0	0
178	84577746	7/25/2014	9:24 AM	BELLE TERRE PKWY	WHIPPOORWILL DR	0	Left Turn	2	0	0	N	Y	N	Clear	Daylight	Left Entering	E	Property Damage Only	Angle	Dry	0	0
179	84577772	8/8/2014	5:21 PM	BELLE TERRE PARKWAY	WHITE VIEW PARKWAY	400	Rear End	3	0	0	N	N	N	Rain	Daylight	Rear End	N	Property Damage Only	Front to Rear	Wet	0	0
180	84577932	8/27/2014	7:30 AM	BELLE TERRE PARKWAY	ROYAL PALMS PARKWAY	500	Rear End	4	0	0	N	N	N	Clear	Daylight	Rear End	S	Property Damage Only	Front to Rear	Dry	0	0
181	84577942	8/30/2014	7:11 AM	BELLE TERRE PKWY	POINNTPLEASENT DR	0	Bicycle	1	0	1	N	N	N	Clear	Daylight	Bicycle	W	Injury	Angle	Dry	1	0
182	84870037	4/4/2015	1:24 AM	SR 100	BELLE TERRE PKWY	0	Left Turn	2	0	2	N	N	N	Clear	Dark - Lighted	Left Entering	W	Injury	Angle	Dry	0	0
183	84872576	7/10/2015	2:55 AM	STATE ROAD 100	BELLE TERRE PARKWAY	1500	Animal	1	0	0	N	N	N	Clear	Dark - Not Lighted	Animal	E	Property Damage Only	Other	Dry	0	0
184	84878718	7/17/2015	8:14 PM	BELLE TERRE PARKWAY	PONCE DELEON BOULEVARD	5280	Other	1	0	1	Y	Y	N	Cloudy	Dusk	Single Vehicle	N	Injury	Other	Wet	0	0
185	85019704	9/8/2014	7:19 AM	BELLE TERRE PKWY	CENTRAL AVE	0	Rear End	2	0	1	N	Y	N	Clear	Daylight	Rear End	N	Injury	Front to Rear	Dry	0	0
186	85019710	9/6/2014	3:10 PM	BELLE TERRE WAY	POINT PLEASANT DRIVE	0	Rear End	2	0	0	N	N	N	Clear	Daylight	Rear End	S	Property Damage Only	Front to Rear	Dry	0	0
187	85019843	9/23/2014	7:43 AM	WHITE VIEW PKWY	BELLE TERRE PKWY	0	Rear End	2	0	0	N	N	N	Cloudy	Daylight	Rear End	W	Property Damage Only	Front to Rear	Dry	0	0
188	85019859	9/24/2014	10:51 AM	E BELLE TERRE PKWY		0	Other	2	0	0	N	N	N	Cloudy	Daylight	Backed Into	E	Property Damage Only	Front to Rear	Dry	0	0
189	85019870	9/25/2014	1:53 PM	BELLE TERRE PARKWAY	CENTRAL AVENUE	0	Rear End	2	0	1	N	N	N	Cloudy	Daylight	Rear End	S	Injury	Front to Rear	Dry	0	0
190	85019912	9/26/2014	1:55 PM	BELLE TERRE PKWY	POINT PLEASANT DR	0	Sideswipe	2	0	0	N	Y	N	Rain	Daylight	Same Direction Sideswipe	W	Property Damage Only	Sideswipe, Same Direction	Wet	0	0
191	85020059	10/16/2014	8:37 PM	BELLE TERRE PARKWAY	KATHLEEN TRAIL	100	Rollover	1	0	1	Y	N	N	Clear	Dark - Lighted	Rollover	E	Injury	Other	Dry	0	0
192	85020063	10/15/2014	1:30 PM	BELLE TERRE PKWY	PINE GROVE DR	0	Other	1	0	2	N	N	N	Clear	Daylight	Single Vehicle	W	Injury	Angle	Dry	1	0
193	85020086	10/17/2014	8:48 PM	E SR 100	BELLE TERE PKWY	300	Rear End	3	0	1	N	N	N	Clear	Dark - Lighted	Rear End	N	Injury	Front to Rear	Dry	0	0
194	85020087	10/16/2014	7:10 AM	PONCE DE LEON DRIVE	BELLE TERRE PARKWAY	0	Bicycle	1	0	1	N	Y	N	Clear	Dawn	Bicycle	W	Injury	Angle	Dry	1	0
195	85020109	10/16/2014	3:35 PM	BELLE TERRE PKWY	ROYAL PALMS PKWY	0	Rear End	2	0	0	N	Y	N	Clear	Daylight	Rear End	S	Property Damage Only	Front to Rear	Dry	0	0
196	85020111	10/16/2014	1:17 PM	SR 100 E	BELLE TERRE PKWY	0	Rear End	2	0	0	N	Y	N	Clear	Daylight	Rear End	W	Property Damage Only	Front to Rear	Dry	0	0
197	85020196	10/31/2014	5:58 AM	BELLE TERRE PARKWAY	PONCE DELEON DRIVE	0	Rear End	3	0	2	N	N	N	Clear	Dark - Not Lighted	Rear End	S	Injury	Front to Rear	Dry	0	0
198	85020198	10/31/2014	1:26 PM	BELLE TERRE PKWY	CENTRAL AVE	0	Rear End	2	0	0	N	N	N	Clear	Daylight	Rear End	N	Property Damage Only	Front to Rear	Dry	0	0
199	85020242	11/4/2014	9:53 AM	BELLE TERRE PKWY	PINE GROVE DR	0	Sideswipe	2	0	0	N	N	N	Cloudy	Daylight	Same Direction Sideswipe	S	Property Damage Only	Sideswipe, Same Direction	Dry	0	0
200	85020324	11/16/2014	11:41 AM	BELLE TERRE PARKWAY	PINE LAKES PARKWAY	150	Rear End	3	0	0	N	Y	N	Clear	Daylight	Rear End	N	Property Damage Only	Front to Rear	Dry	0	0
201	85020329	11/14/2014	1:29 PM	BELLE TERRE PARKWAY	EASTWOOD DRIVE	150	Sideswipe	2	0	0	N	Y	N	Clear	Daylight	Same Direction Sideswipe	S	Property Damage Only	Sideswipe, Same Direction	Dry	0	0
202	85020403	11/25/2014	6:48 PM	BELLE TERRE PARKWAY	N MARKET AVENUE	100	Pedestrian	1	0	1	N	N	N	Rain	Dark - Lighted	Pedestrian	N	Injury	Front to Rear	Wet	0	0
203	85020404	11/26/2014	10:46 AM	BELLE TERRE PARKWAY	PINE GROVE DRIVE	0	Other	2	0	0	N	N	N	Rain	Daylight	Other	S	Property Damage Only	Angle	Wet	0	0
204	85020451	12/3/2014	7:19 AM	BELLE TERRE BLVD	KANKAKEE TRL	0	Left Turn	2	0	2	N	Y	N	Clear	Daylight	Left Entering	E	Injury	Angle	Dry	0	0
205	85020462	12/5/2014	7:40 AM	BELLE TERRE PKWY	PRITCHARD DR	0	Left Turn	2	0	2	N	N	N	Fog, Smog, Smoke	Daylight	Left Entering	W	Injury	Angle	Dry	0	0
206	85020482	12/5/2014	9:47 PM	E ROYAL PALM PARKWAY	BELLE TERRE PATH	0	Animal	1	0	0	N	N	N	Clear	Dark - Not Lighted	Animal	W	Property Damage Only	Other	Dry	0	0
207	85020547	12/14/2014	6:26 PM	BELLE TERRE PARKWAY	PARKVIER DRIVE	800	Rear End	3	0	1	Y	Y	N	Clear	Dusk	Rear End	S	Injury	Front to Rear	Dry	0	0
208	85020575	12/18/2014	11:13 AM	EASTHAMPTON BLVD	BELLE TERRE PARKWAY	0	Other	1	0	0	N	N	N	Clear	Daylight	Single Vehicle	S	Property Damage Only	Front to Rear	Dry	0	0
209	85020602	12/19/2014	4:06 PM	BELLE TERRE PKWY	MARKET AVE	0	Rear End	2	0	0	N	N	N	Clear	Daylight	Rear End	N	Property Damage Only	Front to Rear	Dry	0	0
210	85020619	12/25/2014	2:08 PM	BELLE TERRE PKWY	ROYAL PALMS PKWY	0	Rear End	2	0	1	N	N	N	Clear	Daylight	Rear End	S	Injury	Front to Rear	Dry	0	0
211	85020690	1/1/2015	8:12 PM	BELLE TERRE PARKWAY	E SR 100	0	Rear End	3	0	0	N	N	N	Rain	Dark - Lighted	Rear End	S	Property Damage Only	Front to Rear	Wet	0	0
212	85020696	1/7/2015	9:19 AM	BELLE TERRE PARKWAY	WHITE VIEW PARKWAY	0	Rear End	2	0	0	N	N	N	Clear	Daylight	Rear End	S	Property Damage Only	Front to Rear	Dry	0	0
213	85020755	1/15/2015	7:29 PM	BELLE TERRE PKWY	SR 100	300	Sideswipe	2	0	0	N	N	N	Rain	Dusk	Same Direction Sideswipe	N	Property Damage Only	Sideswipe, Same Direction	Wet	0	0
214	85020808	1/26/2015	6:52 AM	BELLE TERRE PARKWAY	ROYAL PALMS PARKWAY	0	Rear End	2	0	0	N	Y	N	Rain	Dark - Not Lighted	Rear End	S	Property Damage Only	Front to Rear	Wet	0	0
215	85021013	2/18/2015	12:10 PM	BELLE TERRE PARKWAY		0	Rear End	2	0	0	N	N	N	Clear	Daylight	Rear End	S	Property Damage Only	Front to Rear	Dry	0	0
216	85021149	3/6/2015	7:26 PM	EAST STATE ROAD 100	BELLE TERRE PARKWAY	0	Rear End	2	0	0	N	N	N	Rain	Dark - Not Lighted	Rear End	W	Property Damage Only	Front to Rear	Wet	0	0
217	85021167	3/7/2015	3:31 PM	BELLE TERRE PARKWAY	PINE LAKES PARKWAY S	0	Rear End	2	0	1	N	N	N	Clear	Daylight	Rear End	S	Injury	Front to Rear	Dry	0	0
218	85021215	3/9/2015	2:00 PM	BELLE TERRE PKWY	ROYAL PALMS PKWY	0	Angle	2	0	0	N	N	N	Clear	Daylight	Right Angle	NW	Property Damage Only	Front to Rear	Dry	0	0
219	85021231	3/16/2015	9:06 PM	BELLE TERRE PKWY	PARKVIEW DR	0	Rear End	2	0	1	N	N	N	Clear	Dark - Not Lighted	Rear End	S	Injury	Front to Rear	Dry	0	0
220	85021263	3/18/2015	3:12 PM	BELLE TERRE PARKWAY	ROYAL PALMS PARKWAY	0	Rear End	3	0	1	N	Y	N	Clear	Daylight	Rear End	S	Injury	Front to Rear	Dry	0	0
221	85021265	3/18/2015	7:52 AM	BELLE TERRE PKWY	PARKVIEW DR	0	Unknown	2	0	0	N	N	N	Clear	Daylight	Unknown		Property Damage Only	Angle	Dry	0	0
222	85021275	3/20/2015	7:42 AM	BELLE TERRE PKWY	POINT PLEASANT DR	200	Rear End	3	0	4	N	Y	N	Clear	Daylight	Rear End	S	Injury	Front to Rear	Dry	0	0
223	85021312	3/23/2015	3:15 PM	BELLE TERRE PARKWAY	PONCE DELEON DRIVE	50	Rollover	1	0	0	N	N	N	Cloudy	Daylight	Rollover	N	Property Damage Only	Other	Dry	0	0
224	85021339	3/26/2015	11:01 AM	BELLE TERRE DR	PINE GROVE DR	0	Bicycle	1	0	1	N	N	N	Cloudy	Daylight	Bicycle	W	Injury	Angle	Dry	1	0
225	85021358	3/29/2015	2:35 PM	BELLE TERRE BLVD	ZONAL GERANIUM TRL	0	Rollover	1	0	1	N	Y	N	Clear	Daylight	Rollover	N	Injury	Other	Dry	0	0
226	85021430	4/3/2015	1:45 PM	ROYAL PALMS PKWY	BELLE TERRE PKWY	0	Rear End	3	0	1	N	Y	N	Clear	Daylight	Rear End	E	Injury	Front to Rear	Dry	0	0
227	85021454	4/2/2015	8:15 AM	BELLE TERRE PARKWAY	ROYAL PALMS PARKWAY	200	Rear End	2	0	0	N	N	N	Cloudy	Dawn	Rear End	S	Property Damage Only	Front to Rear	Dry	0	0
228	85021479	4/4/2015	12:59 PM	PINE GROVE DR	BELLE TERRE PKWY	0	Left Turn	3	0	2	N	N	N	Clear	Daylight	Left Rear	E	Injury	Angle	Dry	0	0
229	85021480	4/9/2015	8:23 AM	W SR 100	BELLE TERRE	0	Rear End	2	0	0	N	N	N	Clear	Daylight	Rear End	W	Property Damage Only	Front to Rear	Dry	0	0
230	85021539	4/16/2015	12:42 AM	ZEBULAHS TRAIL	BELLE TERRE BOULEVARD	0	Bicycle	1	0	1	N	N	N	Cloudy	Dark - Lighted	Bicycle	W	Injury	Angle	Wet	1	0
231	85021565	4/20/2015	12:17 PM	CENTRAL AVE	BELLE TERRE PKWY	0	Other	2	0	1	N	N	N	Other	Unknown	Other	W	Injury	Unknown	Unknown	0	0
232	85021582	4/22/2015	10:29 AM	SOUTH BELLE TERRE PARKWAY	PARKVIEW DRIVE NORTH	500	Other	1	0	1	N	Y	N	Clear	Daylight	Single Vehicle	S	Injury	Other	Dry	0	0
233	85021585	4/22/2015	6:47 PM	BELLE TERRE BLVD	US 1	0	Other	1	0	0	Y	N	N	Clear	Daylight	Single Vehicle	N	Property Damage Only	Other	Dry	0	0
234	85021587	4/19/2015	3:09 PM	BELLE TERRE PARKWAY		0	Off Road	1	0	0	N	Y	N	Clear	Daylight	Off Road	N	Property Damage Only	Sideswipe, Same Direction	Dry	0	0
235	85165517	8/17/2015	8:30 AM	BELLE TERRE BLVD	KARAS TRAIL	0	Off Road	1	0	1	N	N	N	Cloudy	Daylight	Off Road	W	Injury	Other	Wet	0	0
236	85928743	4/27/2015	5:20 PM	ZEBULAHS TRL	BELLE TERRE BLVD	0	Rear End	2	0	1	N	N	N	Rain	Daylight	Rear End	S	Injury	Front to Rear	Wet	0	0
237	85928795	4/30/2015	5:20 AM	BELLE TERRE	CITATION BLVD	0	Off Road	1	0	0	N	Y	N	Clear	Dark - Lighted	Off Road	N	Property Damage Only	Other	Dry	0	0

Belle Terre Boulevard/Parkway
September 1, 2012 to September 1, 2015

#	HSMV Report Number	Crash Date	Crash Time	Crash Street	Intersecting Street	Offset Distance	Crash Type	Vehicles	Fatalities	Injuries	Alcohol Related	Distraction Related	Drug Related	Weather Condition	Light Condition	Crash Type Detailed	Crash Type Dir	Crash Severity	Manner of Collision	Road Surf Cond	Bicyclists	Pedestrians
238	85928817	5/4/2015	3:19 PM	BELLE TERRE PKWY	MARKET AVE	0	Right Turn	2	0	2	N	N	N	Cloudy	Daylight	Right/Through	W	Injury	Angle	Dry	0	0
239	85928917	5/14/2015	11:51 AM	BELLE TERRE PKWY	WHITEVIEW PKWY	1000	Rear End	3	0	0	N	N	N	Clear	Daylight	Rear End	S	Property Damage Only	Front to Rear	Dry	0	0
240	85928955	5/21/2015	4:48 PM	PRITCHARD DRIVE	BELLE TERRE PARKWAY	0	Other	1	0	1	N	N	N	Clear	Daylight	Single Vehicle	W	Injury	Front to Rear	Dry	1	0
241	85928959	5/21/2015	1:38 PM	BELLE TERRE		0	Rollover	1	0	1	N	Y	N	Clear	Daylight	Rollover	N	Injury	Other	Dry	0	0
242	85928984	5/16/2015	3:39 PM	BELLE TERRE PARKWAY		0	Other	2	0	0	N	Y	N	Clear	Daylight	Parked Vehicle	N	Property Damage Only	Angle	Dry	0	0
243	85929033	5/31/2015	8:20 AM	BELLE TERRE PARKWAY	STATE ROAD 100 EAST MOODY BOULEVARD	0	Other	1	0	1	N	N	N	Clear	Daylight	Single Vehicle	S	Injury	Other	Dry	0	0
244	85929074	6/2/2015	4:34 PM	BELLE TERRE PARKWAY		0	Sideswipe	2	0	0	N	N	Y	Cloudy	Daylight	Same Direction Sideswipe	N	Property Damage Only	Sideswipe, Same Direction	Dry	0	0
245	85929114	6/5/2015	8:00 AM	BELLE TERRE PKWY	PARKVIEW DR	0	Rear End	2	0	1	N	N	N	Clear	Daylight	Rear End	N	Injury	Front to Rear	Dry	0	0
246	85929145	5/13/2015	2:15 PM	BELLE TERRE PKWY	RYMFIRE DR	0	Bicycle	1	0	1	N	Y	N	Cloudy	Daylight	Bicycle	S	Injury	Angle	Dry	1	0
247	85929182	6/15/2015	3:25 PM	BELLE TERRE		0	Pedestrian	1	0	1	N	Y	N	Clear	Daylight	Pedestrian	E	Injury	Other	Dry	0	1
248	85929214	6/19/2015	12:40 PM	US 1	BELLE TERRE PKWY	26400	Other	2	0	0	N	N	N	Clear	Daylight	Other	S	Property Damage Only	Other	Dry	0	0
249	85929237	6/21/2015	7:45 PM	EAST STATE ROAD 100	BELLE TERRE PARKWAY	0	Rear End	2	0	0	N	N	N	Clear	Daylight	Rear End	W	Property Damage Only	Front to Rear	Dry	0	0
250	85929238	6/20/2015	5:35 PM	EASTHAMPTON DR	BELLE TERRE PKWY	0	Rear End	3	0	1	N	N	N	Clear	Daylight	Rear End	E	Injury	Front to Rear	Dry	0	0
251	85929327	7/3/2015	9:40 PM	BELLE TERRE	POINT PLEASANT DR	0	Rear End	3	0	2	N	N	N	Clear	Dark - Not Lighted	Rear End	N	Injury	Front to Rear	Dry	0	0
252	85929345	7/3/2015	11:54 AM	WHITE VIEW PK	BELLE TERRE PKWY	0	Angle	2	0	0	N	N	N	Clear	Daylight	Right Angle	NW	Property Damage Only	Other	Dry	0	0
253	85929401	7/11/2015	2:00 PM	ZEBULAHS TRL	BELLE TERRE BLVD	0	Rollover	1	0	1	N	N	N	Clear	Daylight	Rollover	W	Injury	Other	Dry	0	0
254	85929468	7/17/2015	12:00 PM	S BELLE TERRE PKWY	EASTHAMPTON BLVD	0	Sideswipe	2	0	1	Y	N	Y	Clear	Daylight	Same Direction Sideswipe	S	Injury	Sideswipe, Same Direction	Dry	0	0
255	85929496	7/22/2015	4:25 PM	US HIGHWAY 1 NORTH	BELLE TERRE BOULEVARD	0	Rear End	2	0	0	N	Y	N	Cloudy	Daylight	Rear End	N	Property Damage Only	Front to Rear	Dry	0	0
256	85929549	7/27/2015	9:45 PM	BELLE TERRE PARKWAY	PARKVIEW DRIVE	0	Rear End	2	0	0	N	N	N	Clear	Dark - Lighted	Rear End	N	Property Damage Only	Front to Rear	Dry	0	0
257	85929552	7/26/2015	9:46 AM	PONCE DELEON DRIVE	BELLE TERRE PARKWAY	0	Bicycle	2	0	1	N	N	N	Clear	Daylight	Bicycle	S	Injury	Front to Front	Dry	0	0
258	85929572	7/27/2015	5:41 AM	BELLE TERRE PARKWAY	WHIPPORWILL DRIVE	0	Rollover	2	0	1	N	Y	N	Fog, Smog, Smoke	Dark - Not Lighted	Rollover	E	Injury	Angle	Dry	0	0
259	85929597	7/29/2015	8:49 PM	BELLE TERRE	PINE GROVE DRIVE	0	Other	2	0	1	N	N	N	Clear	Dark - Lighted	Other	N	Injury	Other	Dry	0	0
260	85929681	8/3/2015	2:02 PM	BELLE TERRE BLVD	SR 100 RD	5280	Other	1	0	1	N	N	N	Rain	Daylight	Single Vehicle	N	Injury	Other	Wet	0	0
261	85929684	8/8/2015	11:43 AM	BELLE TERRE PKWY		0	Angle	2	0	0	N	N	N	Clear	Daylight	Right Angle	NW	Property Damage Only	Angle	Dry	0	0
262	85929710	8/10/2015	7:26 PM	SOUTH BELLE TERRE PARKWAY	SOUTH EASTHAMPTON DRIVE	300	Sideswipe	2	0	0	N	N	N	Clear	Daylight	Same Direction Sideswipe		Property Damage Only	Sideswipe, Same Direction	Dry	0	0
263	85929753	8/14/2015	11:59 AM	BELLE TERRE PARKWAY	PINE LAKES PARKWAY SOUTH	0	Left Turn	2	0	3	N	N	N	Clear	Daylight	Left Rear	S	Injury	Angle	Dry	0	0
264	85929768	8/14/2015	3:03 PM	N BELLE TERRE PKWY	EASTWOOD DR	0	Angle	2	0	0	N	Y	N	Cloudy	Daylight	Right Angle	NE	Property Damage Only	Angle	Dry	0	0
265	85929797	8/20/2015	5:20 PM	BELLE TERRE PKWY	RYMFIRE DR	0	Rear End	2	0	1	N	Y	N	Clear	Daylight	Rear End	N	Injury	Front to Rear	Dry	0	0

Appendix I

Crash Review Summary by Intersections

Year	Total Number of Crashes	Number of Injury Crashes	Total Injuries	Number of Fatal Crashes	Total Fatalities	Number of Night Crashes	Number of Wet Crashes
Intersection 1: Belle Terre Parkway at US 1 (signal)							
2012	1	1	1	0	0	1	0
2013	1	1	1	0	0	1	1
2014	1	0	0	0	0	0	0
2015	3	0	0	0	0	0	0
2012-2015	**6**	**2**	**2**	**0**	**0**	**2**	**1**
Average	***2.00***	***0.67***	***0.67***	***0.00***	***0.00***	***0.67***	***0.33***
Percent	***-***	***33.33%***	***-***	***0.00%***	***-***	***33.33%***	***16.67%***
Intersection 2: Belle Terre Parkway at Kaywood Pl/Kankakee Trail (stop)							
2012	0	0	0	0	0	0	0
2013	0	0	0	0	0	0	0
2014	1	1	2	0	0	0	0
2015	0	0	0	0	0	0	0
2012-2015	**1**	**1**	**2**	**0**	**0**	**0**	**0**
Average	***0.33***	***0.33***	***0.67***	***0.00***	***0.00***	***0.00***	***0.00***
Percent	***-***	***100.00%***	***-***	***0.00%***	***-***	***0.00%***	***0.00%***
Intersection 3: Belle Terre Parkway at Kathleen Trail (S) (stop)							
2012	0	0	0	0	0	0	0
2013	0	0	0	0	0	0	0
2014	1	1	1	0	0	1	0
2015	0	0	0	0	0	0	0
2012-2015	**1**	**1**	**1**	**0**	**0**	**1**	**0**
Average	***0.33***	***0.33***	***0.33***	***0.00***	***0.00***	***0.33***	***0.00***
Percent	***-***	***100.00%***	***-***	***0.00%***	***-***	***100.00%***	***0.00%***

Year	Total Number of Crashes	Number of Injury Crashes	Total Injuries	Number of Fatal Crashes	Total Fatalities	Number of Night Crashes	Number of Wet Crashes
Intersection 4: Belle Terre Parkway at Kathleen Trail (N) (stop)							
2012	0	0	0	0	0	0	0
2013	0	0	0	0	0	0	0
2014	0	0	0	0	0	0	0
2015	0	0	0	0	0	0	0
2012-2015	**0**	**0**	**0**	**0**	**0**	**0**	**0**
Average	***0.00***	***0.00***	***0.00***	***0.00***	***0.00***	***0.00***	***0.00***
Percent	***-***	***0.00%***	***-***	***0.00%***	***-***	***0.00%***	***0.00%***
Intersection 5: Belle Terre Parkway at Karas Trail (stop)							
2012	0	0	0	0	0	0	0
2013	0	0	0	0	0	0	0
2014	1	0	0	0	0	0	0
2015	1	1	1	0	0	0	1
2012-2015	**2**	**1**	**1**	**0**	**0**	**0**	**1**
Average	***0.67***	***0.33***	***0.33***	***0.00***	***0.00***	***0.00***	***0.33***
Percent	***-***	***50.00%***	***-***	***0.00%***	***-***	***0.00%***	***50.00%***
Intersection 6: Belle Terre Parkway at Citation Blvd (stop)							
2012	0	0	0	0	0	0	0
2013	1	1	1	0	0	1	0
2014	2	2	2	0	0	2	1
2015	1	0	0	0	0	1	0
2012-2015	**4**	**3**	**3**	**0**	**0**	**4**	**1**
Average	***1.33***	***1.00***	***1.00***	***0.00***	***0.00***	***1.33***	***0.33***
Percent	***-***	***75.00%***	***-***	***0.00%***	***-***	***100.00%***	***25.00%***

Year	Total Number of Crashes	Number of Injury Crashes	Total Injuries	Number of Fatal Crashes	Total Fatalities	Number of Night Crashes	Number of Wet Crashes
Intersection 7: Belle Terre Parkway at Zonal Geranium Trail (stop)							
2012	0	0	0	0	0	0	0
2013	0	0	0	0	0	0	0
2014	0	0	0	0	0	0	0
2015	0	0	0	0	0	0	0
2012-2015	**0**	**0**	**0**	**0**	**0**	**0**	**0**
Average	***0.00***	***0.00***	***0.00***	***0.00***	***0.00***	***0.00***	***0.00***
Percent	***-***	***0.00%***	***-***	***0.00%***	***-***	***0.00%***	***0.00%***
Intersection 8: Belle Terre Parkway at Zonal Geranium Trail (N) (stop)							
2012	0	0	0	0	0	0	0
2013	0	0	0	0	0	0	0
2014	0	0	0	0	0	0	0
2015	1	1	1	0	0	0	0
2012-2015	**1**	**1**	**1**	**0**	**0**	**0**	**0**
Average	***0.33***	***0.33***	***0.33***	***0.00***	***0.00***	***0.00***	***0.00***
Percent	***-***	***100.00%***	***-***	***0.00%***	***-***	***0.00%***	***0.00%***
Intersection 9: Belle Terre Parkway at Laguna Forest Trail (stop)							
2012	0	0	0	0	0	0	0
2013	1	1	1	0	0	0	0
2014	1	1	2	0	0	0	0
2015	0	0	0	0	0	0	0
2012-2015	**2**	**2**	**3**	**0**	**0**	**0**	**0**
Average	***0.67***	***0.67***	***1.00***	***0.00***	***0.00***	***0.00***	***0.00***
Percent	***-***	***100.00%***	***-***	***0.00%***	***-***	***0.00%***	***0.00%***

Year	Total Number of Crashes	Number of Injury Crashes	Total Injuries	Number of Fatal Crashes	Total Fatalities	Number of Night Crashes	Number of Wet Crashes
Intersection 10: Belle Terre Parkway at Zinnia Trail (S) (stop)							
2012	0	0	0	0	0	0	0
2013	0	0	0	0	0	0	0
2014	0	0	0	0	0	0	0
2015	0	0	0	0	0	0	0
2012-2015	**0**	**0**	**0**	**0**	**0**	**0**	**0**
Average	***0.00***	***0.00***	***0.00***	***0.00***	***0.00***	***0.00***	***0.00***
Percent	***-***	***0.00%***	***-***	***0.00%***	***-***	***0.00%***	***0.00%***
Intersection 11: Belle Terre Parkway at Zinnia Trail (N) (stop)							
2012	0	0	0	0	0	0	0
2013	0	0	0	0	0	0	0
2014	0	0	0	0	0	0	0
2015	0	0	0	0	0	0	0
2012-2015	**0**	**0**	**0**	**0**	**0**	**0**	**0**
Average	***0.00***	***0.00***	***0.00***	***0.00***	***0.00***	***0.00***	***0.00***
Percent	***-***	***0.00%***	***-***	***0.00%***	***-***	***0.00%***	***0.00%***
Intersection 12: Belle Terre Parkway at Zaun Trail (stop)							
2012	1	0	0	0	0	0	0
2013	0	0	0	0	0	0	0
2014	1	0	0	0	0	1	0
2015	1	1	1	0	0	0	1
2012-2015	**3**	**1**	**1**	**0**	**0**	**1**	**1**
Average	***1.00***	***0.33***	***0.33***	***0.00***	***0.00***	***0.33***	***0.33***
Percent	***-***	***33.33%***	***-***	***0.00%***	***-***	***33.33%***	***33.33%***

Year	Total Number of Crashes	Number of Injury Crashes	Total Injuries	Number of Fatal Crashes	Total Fatalities	Number of Night Crashes	Number of Wet Crashes
Intersection 13: Belle Terre Parkway at Zebulah's Trail (S) (stop)							
2012	0	0	0	0	0	0	0
2013	2	1	3	0	0	0	1
2014	1	1	1	0	0	0	0
2015	3	3	3	0	0	1	2
2012-2015	**6**	**5**	**7**	**0**	**0**	**1**	**3**
Average	***2.00***	***1.67***	***2.33***	***0.00***	***0.00***	***0.33***	***1.00***
Percent	***-***	***83.33%***	***-***	***0.00%***	***-***	***16.67%***	***50.00%***
Intersection 14: Belle Terre Parkway at Zebulah's Trail (N) (stop)							
2012	0	0	0	0	0	0	0
2013	1	1	1	0	0	0	0
2014	0	0	0	0	0	0	0
2015	0	0	0	0	0	0	0
2012-2015	**1**	**1**	**1**	**0**	**0**	**0**	**0**
Average	***0.33***	***0.33***	***0.33***	***0.00***	***0.00***	***0.00***	***0.00***
Percent	***-***	***100.00%***	***-***	***0.00%***	***-***	***0.00%***	***0.00%***
Intersection 15: Belle Terre Parkway at SR 100 (signal)							
2012	4	3	8	0	0	1	2
2013	26	17	34	1	1	4	5
2014	12	6	7	0	0	2	1
2015	8	2	3	0	0	4	3
2012-2015	**50**	**28**	**52**	**1**	**1**	**11**	**11**
Average	***16.67***	***9.33***	***17.33***	***0.33***	***0.33***	***3.67***	***3.67***
Percent	***-***	***56.00%***	***-***	***2.00%***	***-***	***22.00%***	***22.00%***

Year	Total Number of Crashes	Number of Injury Crashes	Total Injuries	Number of Fatal Crashes	Total Fatalities	Number of Night Crashes	Number of Wet Crashes
Intersection 16: Belle Terre Parkway at Eastwood Dr (stop)							
2012	0	0	0	0	0	0	0
2013	0	0	0	0	0	0	0
2014	0	0	0	0	0	0	0
2015	0	0	0	0	0	0	0
2012-2015	**0**	**0**	**0**	**0**	**0**	**0**	**0**
Average	***0.00***	***0.00***	***0.00***	***0.00***	***0.00***	***0.00***	***0.00***
Percent	***-***	***0.00%***	***-***	***0.00%***	***-***	***0.00%***	***0.00%***
Intersection 17: Belle Terre Parkway at Eastwood Dr/Market Ave (stop)							
2012	3	1	2	0	0	2	0
2013	7	4	5	0	0	4	0
2014	7	1	1	0	0	2	1
2015	2	1	2	0	0	0	0
2012-2015	**19**	**7**	**10**	**0**	**0**	**8**	**1**
Average	***6.33***	***2.33***	***3.33***	***0.00***	***0.00***	***2.67***	***0.33***
Percent	***-***	***36.84%***	***-***	***0.00%***	***-***	***42.11%***	***5.26%***
Intersection 18: Belle Terre Parkway at Easthampton Blvd/Central Ave (signal)							
2012	2	0	0	0	0	0	0
2013	5	2	2	0	0	0	1
2014	10	4	6	0	0	1	1
2015	10	4	4	0	0	1	1
2012-2015	**27**	**10**	**12**	**0**	**0**	**2**	**3**
Average	***9.00***	***3.33***	***4.00***	***0.00***	***0.00***	***0.67***	***1.00***
Percent	***-***	***37.04%***	***-***	***0.00%***	***-***	***7.41%***	***11.11%***

Year	Total Number of Crashes	Number of Injury Crashes	Total Injuries	Number of Fatal Crashes	Total Fatalities	Number of Night Crashes	Number of Wet Crashes
Intersection 19: Belle Terre Parkway at Royal Palms Pkwy (signal)							
2012	2	2	4	0	0	1	0
2013	10	5	12	0	0	1	1
2014	11	7	19	1	1	3	0
2015	7	2	2	1	1	1	1
2012-2015	**30**	**16**	**37**	**2**	**2**	**6**	**2**
Average	***10.00***	***5.33***	***12.33***	***0.67***	***0.67***	***2.00***	***0.67***
Percent	***-***	***53.33%***	***-***	***6.67%***	***-***	***20.00%***	***6.67%***
Intersection 20: Belle Terre Parkway at Point Pleasant Dr (stop)							
2012	1	1	1	0	0	0	0
2013	1	0	0	0	0	0	0
2014	4	1	1	0	0	1	1
2015	2	2	6	0	0	1	0
2012-2015	**8**	**4**	**8**	**0**	**0**	**2**	**1**
Average	***2.67***	***1.33***	***2.67***	***0.00***	***0.00***	***0.67***	***0.33***
Percent	***-***	***50.00%***	***-***	***0.00%***	***-***	***25.00%***	***12.50%***
Intersection 21: Belle Terre Parkway at Rymfire Dr (signal)							
2012	2	2	2	0	0	0	1
2013	6	2	2	0	0	0	1
2014	3	3	4	0	0	1	0
2015	2	2	2	0	0	0	0
2012-2015	**13**	**9**	**10**	**0**	**0**	**1**	**2**
Average	***4.33***	***3.00***	***3.33***	***0.00***	***0.00***	***0.33***	***0.67***
Percent	***-***	***69.23%***	***-***	***0.00%***	***-***	***7.69%***	***15.38%***

Year	Total Number of Crashes	Number of Injury Crashes	Total Injuries	Number of Fatal Crashes	Total Fatalities	Number of Night Crashes	Number of Wet Crashes
Intersection 22: Belle Terre Parkway at Ponce Deleon Dr (stop)							
2012	0	0	0	0	0	0	0
2013	3	3	7	0	0	1	3
2014	4	4	7	0	0	2	0
2015	3	2	2	0	0	0	1
2012-2015	**10**	**9**	**16**	**0**	**0**	**3**	**4**
Average	***3.33***	***3.00***	***5.33***	***0.00***	***0.00***	***1.00***	***1.33***
Percent	***-***	***90.00%***	***-***	***0.00%***	***-***	***30.00%***	***40.00%***
Intersection 23: Belle Terre Parkway at Pine Grove Dr (stop)							
2012	1	1	1	0	0	0	0
2013	2	2	4	0	0	0	0
2014	14	6	11	2	2	1	1
2015	3	3	4	0	0	1	0
2012-2015	**20**	**12**	**20**	**2**	**2**	**2**	**1**
Average	***6.67***	***4.00***	***6.67***	***0.67***	***0.67***	***0.67***	***0.33***
Percent	***-***	***60.00%***	***-***	***10.00%***	***-***	***10.00%***	***5.00%***
Intersection 24: Belle Terre Parkway at Whiteview Pkwy (signal)							
2012	4	2	7	1	1	1	1
2013	5	3	3	0	0	0	0
2014	5	1	1	0	0	0	1
2015	4	1	3	0	0	1	0
2012-2015	**18**	**7**	**14**	**1**	**1**	**2**	**2**
Average	***6.00***	***2.33***	***4.67***	***0.33***	***0.33***	***0.67***	***0.67***
Percent	***-***	***38.89%***	***-***	***5.56%***	***-***	***11.11%***	***11.11%***

Year	Total Number of Crashes	Number of Injury Crashes	Total Injuries	Number of Fatal Crashes	Total Fatalities	Number of Night Crashes	Number of Wet Crashes
Intersection 25: Belle Terre Parkway at Whippoorwill Dr (stop)							
2012	0	0	0	0	0	0	0
2013	3	3	4	0	0	1	0
2014	2	0	0	0	0	0	0
2015	2	2	2	0	0	2	0
2012-2015	**7**	**5**	**6**	**0**	**0**	**3**	**0**
Average	***2.33***	***1.67***	***2.00***	***0.00***	***0.00***	***1.00***	***0.00***
Percent	***-***	***71.43%***	***-***	***0.00%***	***-***	***42.86%***	***0.00%***
Intersection 26: Belle Terre Parkway at Pritchard Dr (stop)							
2012	0	0	0	0	0	0	0
2013	0	0	0	0	0	0	0
2014	1	1	2	0	0	0	0
2015	1	1	1	0	0	0	0
2012-2015	**2**	**2**	**3**	**0**	**0**	**0**	**0**
Average	***0.67***	***0.67***	***1.00***	***0.00***	***0.00***	***0.00***	***0.00***
Percent	***-***	***100.00%***	***-***	***0.00%***	***-***	***0.00%***	***0.00%***
Intersection 27: Belle Terre Parkway at School Entrance (signal)							
2012	0	0	0	0	0	0	0
2013	1	1	1	0	0	0	0
2014	0	0	0	0	0	0	0
2015	0	0	0	0	0	0	0
2012-2015	**1**	**1**	**1**	**0**	**0**	**0**	**0**
Average	***0.33***	***0.33***	***0.33***	***0.00***	***0.00***	***0.00***	***0.00***
Percent	***-***	***100.00%***	***-***	***0.00%***	***-***	***0.00%***	***0.00%***

Year	Total Number of Crashes	Number of Injury Crashes	Total Injuries	Number of Fatal Crashes	Total Fatalities	Number of Night Crashes	Number of Wet Crashes
Intersection 28: Belle Terre Parkway at Parkview Dr (S) (signal)							
2012	0	0	0	0	0	0	0
2013	0	0	0	0	0	0	0
2014	0	0	0	0	0	0	0
2015	0	0	0	0	0	0	0
2012-2015	**0**	**0**	**0**	**0**	**0**	**0**	**0**
Average	***0.00***	***0.00***	***0.00***	***0.00***	***0.00***	***0.00***	***0.00***
Percent	***-***	***0.00%***	***-***	***0.00%***	***-***	***0.00%***	***0.00%***
Intersection 29: Belle Terre Parkway at Parkview Dr (N) (stop)							
2012	0	0	0	0	0	0	0
2013	6	2	3	0	0	1	2
2014	3	1	1	0	0	0	1
2015	5	3	3	0	0	2	0
2012-2015	**14**	**6**	**7**	**0**	**0**	**3**	**3**
Average	***4.67***	***2.00***	***2.33***	***0.00***	***0.00***	***1.00***	***1.00***
Percent	***-***	***42.86%***	***-***	***0.00%***	***-***	***21.43%***	***21.43%***
Intersection 30: Belle Terre Parkway at Pine Lakes Pkwy (signal)							
2012	2	2	5	0	0	2	0
2013	6	3	5	0	0	2	0
2014	6	4	8	0	0	4	2
2015	5	3	5	0	0	0	0
2012-2015	**19**	**12**	**23**	**0**	**0**	**8**	**2**
Average	***6.33***	***4.00***	***7.67***	***0.00***	***0.00***	***2.67***	***0.67***
Percent	***-***	***63.16%***	***-***	***0.00%***	***-***	***42.11%***	***10.53%***

Crash Type	2012	2013	2014	2015	2012-2015	Average per Year	Percent
Intersection 1: Belle Terre Parkway at US 1 (signal)							
Angle	0	0	0	0	**0**	**0.00**	**0.00%**
Rear End	0	0	0	1	**1**	**0.33**	**16.67%**
Head On	0	0	0	0	**0**	**0.00**	**0.00%**
Left Turn	0	0	1	0	**1**	**0.33**	**16.67%**
Sideswipe	0	0	0	0	**0**	**0.00**	**0.00%**
Pedestrian	0	0	0	0	**0**	**0.00**	**0.00%**
Right Turn	0	0	0	0	**0**	**0.00**	**0.00%**
Bicycle	0	0	0	0	**0**	**0.00**	**0.00%**
Other	1	1	0	2	**4**	**1.33**	**66.67%**
Total	***1***	***1***	***1***	***3***	***6***	**-**	***100.00%***
Intersection 2: Belle Terre Parkway at Kaywood Pl/Kankakee Trail (stop)							
Angle	0	0	0	0	**0**	**0.00**	**0.00%**
Rear End	0	0	0	0	**0**	**0.00**	**0.00%**
Head On	0	0	0	0	**0**	**0.00**	**0.00%**
Left Turn	0	0	1	0	**1**	**0.33**	**100.00%**
Sideswipe	0	0	0	0	**0**	**0.00**	**0.00%**
Pedestrian	0	0	0	0	**0**	**0.00**	**0.00%**
Right Turn	0	0	0	0	**0**	**0.00**	**0.00%**
Bicycle	0	0	0	0	**0**	**0.00**	**0.00%**
Other	0	0	0	0	**0**	**0.00**	**0.00%**
Total	***0***	***0***	***1***	***0***	***1***	**-**	***100.00%***
Intersection 3: Belle Terre Parkway at Kathleen Trail (S) (stop)							
Angle	0	0	0	0	**0**	**0.00**	**0.00%**
Rear End	0	0	0	0	**0**	**0.00**	**0.00%**
Head On	0	0	0	0	**0**	**0.00**	**0.00%**
Left Turn	0	0	0	0	**0**	**0.00**	**0.00%**
Sideswipe	0	0	0	0	**0**	**0.00**	**0.00%**
Pedestrian	0	0	0	0	**0**	**0.00**	**0.00%**
Right Turn	0	0	0	0	**0**	**0.00**	**0.00%**
Bicycle	0	0	0	0	**0**	**0.00**	**0.00%**
Other	0	0	1	0	**1**	**0.33**	**100.00%**
Total	***0***	***0***	***1***	***0***	***1***	**-**	***100.00%***

Crash Type	2012	2013	2014	2015	2012-2015	Average per Year	Percent
Intersection 4: Belle Terre Parkway at Kathleen Trail (N) (stop)							
Angle	0	0	0	0	**0**	**0.00**	**0.00%**
Rear End	0	0	0	0	**0**	**0.00**	**0.00%**
Head On	0	0	0	0	**0**	**0.00**	**0.00%**
Left Turn	0	0	0	0	**0**	**0.00**	**0.00%**
Sideswipe	0	0	0	0	**0**	**0.00**	**0.00%**
Pedestrian	0	0	0	0	**0**	**0.00**	**0.00%**
Right Turn	0	0	0	0	**0**	**0.00**	**0.00%**
Bicycle	0	0	0	0	**0**	**0.00**	**0.00%**
Other	0	0	0	0	**0**	**0.00**	**0.00%**
Total	***0***	***0***	***0***	***0***	***0***	**-**	***0.00%***
Intersection 5: Belle Terre Parkway at Karas Trail (stop)							
Angle	0	0	0	0	**0**	**0.00**	**0.00%**
Rear End	0	0	0	0	**0**	**0.00**	**0.00%**
Head On	0	0	0	0	**0**	**0.00**	**0.00%**
Left Turn	0	0	0	0	**0**	**0.00**	**0.00%**
Sideswipe	0	0	0	0	**0**	**0.00**	**0.00%**
Pedestrian	0	0	0	0	**0**	**0.00**	**0.00%**
Right Turn	0	0	0	0	**0**	**0.00**	**0.00%**
Bicycle	0	0	0	0	**0**	**0.00**	**0.00%**
Other	0	0	1	1	**2**	**0.67**	**100.00%**
Total	***0***	***0***	***1***	***1***	***2***	**-**	***100.00%***
Intersection 6: Belle Terre Parkway at Citation Blvd (stop)							
Angle	0	0	0	0	**0**	**0.00**	**0.00%**
Rear End	0	0	0	0	**0**	**0.00**	**0.00%**
Head On	0	0	0	0	**0**	**0.00**	**0.00%**
Left Turn	0	0	0	0	**0**	**0.00**	**0.00%**
Sideswipe	0	0	0	0	**0**	**0.00**	**0.00%**
Pedestrian	0	0	0	0	**0**	**0.00**	**0.00%**
Right Turn	0	0	0	0	**0**	**0.00**	**0.00%**
Bicycle	0	0	0	0	**0**	**0.00**	**0.00%**
Other	0	1	2	1	**4**	**1.33**	**100.00%**
Total	***0***	***1***	***2***	***1***	***4***	**-**	***100.00%***

Crash Type	2012	2013	2014	2015	2012-2015	Average per Year	Percent
Intersection 7: Belle Terre Parkway at Zonal Geranium Trail (stop)							
Angle	0	0	0	0	**0**	**0.00**	**0.00%**
Rear End	0	0	0	0	**0**	**0.00**	**0.00%**
Head On	0	0	0	0	**0**	**0.00**	**0.00%**
Left Turn	0	0	0	0	**0**	**0.00**	**0.00%**
Sideswipe	0	0	0	0	**0**	**0.00**	**0.00%**
Pedestrian	0	0	0	0	**0**	**0.00**	**0.00%**
Right Turn	0	0	0	0	**0**	**0.00**	**0.00%**
Bicycle	0	0	0	0	**0**	**0.00**	**0.00%**
Other	0	0	0	0	**0**	**0.00**	**0.00%**
Total	***0***	***0***	***0***	***0***	***0***	**-**	***0.00%***
Intersection 8: Belle Terre Parkway at Zonal Geranium Trail (N) (stop)							
Angle	0	0	0	0	**0**	**0.00**	**0.00%**
Rear End	0	0	0	0	**0**	**0.00**	**0.00%**
Head On	0	0	0	0	**0**	**0.00**	**0.00%**
Left Turn	0	0	0	0	**0**	**0.00**	**0.00%**
Sideswipe	0	0	0	0	**0**	**0.00**	**0.00%**
Pedestrian	0	0	0	0	**0**	**0.00**	**0.00%**
Right Turn	0	0	0	0	**0**	**0.00**	**0.00%**
Bicycle	0	0	0	0	**0**	**0.00**	**0.00%**
Other	0	0	0	1	**1**	**0.33**	**100.00%**
Total	***0***	***0***	***0***	***1***	***1***	**-**	***100.00%***
Intersection 9: Belle Terre Parkway at Laguna Forest Trail (stop)							
Angle	0	0	0	0	**0**	**0.00**	**0.00%**
Rear End	0	0	0	0	**0**	**0.00**	**0.00%**
Head On	0	0	0	0	**0**	**0.00**	**0.00%**
Left Turn	0	1	0	0	**1**	**0.33**	**50.00%**
Sideswipe	0	0	1	0	**1**	**0.33**	**50.00%**
Pedestrian	0	0	0	0	**0**	**0.00**	**0.00%**
Right Turn	0	0	0	0	**0**	**0.00**	**0.00%**
Bicycle	0	0	0	0	**0**	**0.00**	**0.00%**
Other	0	0	0	0	**0**	**0.00**	**0.00%**
Total	***0***	***1***	***1***	***0***	***2***	**-**	***100.00%***

Crash Type	2012	2013	2014	2015	2012-2015	Average per Year	Percent
Intersection 10: Belle Terre Parkway at Zinnia Trail (S) (stop)							
Angle	0	0	0	0	**0**	**0.00**	**0.00%**
Rear End	0	0	0	0	**0**	**0.00**	**0.00%**
Head On	0	0	0	0	**0**	**0.00**	**0.00%**
Left Turn	0	0	0	0	**0**	**0.00**	**0.00%**
Sideswipe	0	0	0	0	**0**	**0.00**	**0.00%**
Pedestrian	0	0	0	0	**0**	**0.00**	**0.00%**
Right Turn	0	0	0	0	**0**	**0.00**	**0.00%**
Bicycle	0	0	0	0	**0**	**0.00**	**0.00%**
Other	0	0	0	0	**0**	**0.00**	**0.00%**
Total	***0***	***0***	***0***	***0***	***0***	**-**	***0.00%***
Intersection 11: Belle Terre Parkway at Zinnia Trail (N) (stop)							
Angle	0	0	0	0	**0**	**0.00**	**0.00%**
Rear End	0	0	0	0	**0**	**0.00**	**0.00%**
Head On	0	0	0	0	**0**	**0.00**	**0.00%**
Left Turn	0	0	0	0	**0**	**0.00**	**0.00%**
Sideswipe	0	0	0	0	**0**	**0.00**	**0.00%**
Pedestrian	0	0	0	0	**0**	**0.00**	**0.00%**
Right Turn	0	0	0	0	**0**	**0.00**	**0.00%**
Bicycle	0	0	0	0	**0**	**0.00**	**0.00%**
Other	0	0	0	0	**0**	**0.00**	**0.00%**
Total	***0***	***0***	***0***	***0***	***0***	**-**	***0.00%***
Intersection 12: Belle Terre Parkway at Zaun Trail (stop)							
Angle	0	0	0	0	**0**	**0.00**	**0.00%**
Rear End	0	0	0	0	**0**	**0.00**	**0.00%**
Head On	0	0	0	0	**0**	**0.00**	**0.00%**
Left Turn	0	0	0	0	**0**	**0.00**	**0.00%**
Sideswipe	0	0	1	0	**1**	**0.33**	**33.33%**
Pedestrian	0	0	0	0	**0**	**0.00**	**0.00%**
Right Turn	0	0	0	0	**0**	**0.00**	**0.00%**
Bicycle	0	0	0	0	**0**	**0.00**	**0.00%**
Other	1	0	0	1	**2**	**0.67**	**66.67%**
Total	***1***	***0***	***1***	***1***	***3***	**-**	***100.00%***

Crash Type	2012	2013	2014	2015	2012-2015	Average per Year	Percent
Intersection 13: Belle Terre Parkway at Zebulah's Trail (S) (stop)							
Angle	0	0	1	0	**1**	**0.33**	**16.67%**
Rear End	0	1	0	1	**2**	**0.67**	**33.33%**
Head On	0	0	0	0	**0**	**0.00**	**0.00%**
Left Turn	0	0	0	0	**0**	**0.00**	**0.00%**
Sideswipe	0	0	0	0	**0**	**0.00**	**0.00%**
Pedestrian	0	0	0	0	**0**	**0.00**	**0.00%**
Right Turn	0	0	0	0	**0**	**0.00**	**0.00%**
Bicycle	0	0	0	1	**1**	**0.33**	**16.67%**
Other	0	1	0	1	**2**	**0.67**	**33.33%**
Total	***0***	***2***	***1***	***3***	***6***	**-**	***100.00%***
Intersection 14: Belle Terre Parkway at Zebulah's Trail (N) (stop)							
Angle	0	0	0	0	**0**	**0.00**	**0.00%**
Rear End	0	0	0	0	**0**	**0.00**	**0.00%**
Head On	0	0	0	0	**0**	**0.00**	**0.00%**
Left Turn	0	0	0	0	**0**	**0.00**	**0.00%**
Sideswipe	0	0	0	0	**0**	**0.00**	**0.00%**
Pedestrian	0	0	0	0	**0**	**0.00**	**0.00%**
Right Turn	0	0	0	0	**0**	**0.00**	**0.00%**
Bicycle	0	0	0	0	**0**	**0.00**	**0.00%**
Other	0	1	0	0	**1**	**0.33**	**100.00%**
Total	***0***	***1***	***0***	***0***	***1***	**-**	***100.00%***
Intersection 15: Belle Terre Parkway at SR 100 (signal)							
Angle	0	0	0	0	**0**	**0.00**	**0.00%**
Rear End	3	12	7	4	**26**	**8.67**	**52.00%**
Head On	0	0	0	0	**0**	**0.00**	**0.00%**
Left Turn	1	2	1	1	**5**	**1.67**	**10.00%**
Sideswipe	0	2	0	1	**3**	**1.00**	**6.00%**
Pedestrian	0	1	0	0	**1**	**0.33**	**2.00%**
Right Turn	0	0	0	0	**0**	**0.00**	**0.00%**
Bicycle	0	1	2	0	**3**	**1.00**	**6.00%**
Other	0	8	2	2	**12**	**4.00**	**24.00%**
Total	***4***	***26***	***12***	***8***	***50***	**-**	***100.00%***

Crash Type	2012	2013	2014	2015	2012-2015	Average per Year	Percent
Intersection 16: Belle Terre Parkway at Eastwood Dr (stop)							
Angle	0	0	0	0	**0**	**0.00**	**0.00%**
Rear End	0	0	0	0	**0**	**0.00**	**0.00%**
Head On	0	0	0	0	**0**	**0.00**	**0.00%**
Left Turn	0	0	0	0	**0**	**0.00**	**0.00%**
Sideswipe	0	0	0	0	**0**	**0.00**	**0.00%**
Pedestrian	0	0	0	0	**0**	**0.00**	**0.00%**
Right Turn	0	0	0	0	**0**	**0.00**	**0.00%**
Bicycle	0	0	0	0	**0**	**0.00**	**0.00%**
Other	0	0	0	0	**0**	**0.00**	**0.00%**
Total	***0***	***0***	***0***	***0***	***0***	**-**	***0.00%***
Intersection 17: Belle Terre Parkway at Eastwood Dr/Market Ave (stop)							
Angle	0	1	0	1	**2**	**0.67**	**10.53%**
Rear End	0	1	2	0	**3**	**1.00**	**15.79%**
Head On	0	0	0	0	**0**	**0.00**	**0.00%**
Left Turn	0	1	1	0	**2**	**0.67**	**10.53%**
Sideswipe	0	0	2	0	**2**	**0.67**	**10.53%**
Pedestrian	0	0	1	0	**1**	**0.33**	**5.26%**
Right Turn	0	1	0	1	**2**	**0.67**	**10.53%**
Bicycle	0	0	0	0	**0**	**0.00**	**0.00%**
Other	3	3	1	0	**7**	**2.33**	**36.84%**
Total	***3***	***7***	***7***	***2***	***19***	**-**	***100.00%***
Intersection 18: Belle Terre Parkway at Easthampton Blvd/Central Ave (signal)							
Angle	0	0	0	1	**1**	**0.33**	**3.70%**
Rear End	1	2	6	3	**12**	**4.00**	**44.44%**
Head On	0	0	0	0	**0**	**0.00**	**0.00%**
Left Turn	0	0	0	0	**0**	**0.00**	**0.00%**
Sideswipe	0	0	0	3	**3**	**1.00**	**11.11%**
Pedestrian	0	0	0	1	**1**	**0.33**	**3.70%**
Right Turn	0	0	0	0	**0**	**0.00**	**0.00%**
Bicycle	0	0	0	0	**0**	**0.00**	**0.00%**
Other	1	3	4	2	**10**	**3.33**	**37.04%**
Total	***2***	***5***	***10***	***10***	***27***	**-**	***100.00%***

Crash Type	2012	2013	2014	2015	2012-2015	Average per Year	Percent
Intersection 19: Belle Terre Parkway at Royal Palms Pkwy (signal)							
Angle	1	0	0	1	**2**	**0.67**	**6.67%**
Rear End	0	9	7	5	**21**	**7.00**	**70.00%**
Head On	0	1	0	0	**1**	**0.33**	**3.33%**
Left Turn	1	0	1	0	**2**	**0.67**	**6.67%**
Sideswipe	0	0	1	0	**1**	**0.33**	**3.33%**
Pedestrian	0	0	0	0	**0**	**0.00**	**0.00%**
Right Turn	0	0	0	0	**0**	**0.00**	**0.00%**
Bicycle	0	0	0	0	**0**	**0.00**	**0.00%**
Other	0	0	2	1	**3**	**1.00**	**10.00%**
Total	***2***	***10***	***11***	***7***	***30***	***-***	***100.00%***
Intersection 20: Belle Terre Parkway at Point Pleasant Dr (stop)							
Angle	0	0	1	0	**1**	**0.33**	**12.50%**
Rear End	0	0	1	2	**3**	**1.00**	**37.50%**
Head On	0	0	0	0	**0**	**0.00**	**0.00%**
Left Turn	0	0	0	0	**0**	**0.00**	**0.00%**
Sideswipe	0	0	1	0	**1**	**0.33**	**12.50%**
Pedestrian	0	1	0	0	**1**	**0.33**	**12.50%**
Right Turn	0	0	0	0	**0**	**0.00**	**0.00%**
Bicycle	1	0	1	0	**2**	**0.67**	**25.00%**
Other	0	0	0	0	**0**	**0.00**	**0.00%**
Total	***1***	***1***	***4***	***2***	***8***	***-***	***100.00%***
Intersection 21: Belle Terre Parkway at Rymfire Dr (signal)							
Angle	0	0	0	0	**0**	**0.00**	**0.00%**
Rear End	1	4	2	1	**8**	**2.67**	**61.54%**
Head On	0	0	0	0	**0**	**0.00**	**0.00%**
Left Turn	0	0	0	0	**0**	**0.00**	**0.00%**
Sideswipe	0	0	0	0	**0**	**0.00**	**0.00%**
Pedestrian	1	0	0	0	**1**	**0.33**	**7.69%**
Right Turn	0	0	0	0	**0**	**0.00**	**0.00%**
Bicycle	0	0	0	1	**1**	**0.33**	**7.69%**
Other	0	2	1	0	**3**	**1.00**	**23.08%**
Total	***2***	***6***	***3***	***2***	***13***	***-***	***100.00%***

Crash Type	2012	2013	2014	2015	2012-2015	Average per Year	Percent
Intersection 22: Belle Terre Parkway at Ponce Deleon Dr (stop)							
Angle	0	0	0	0	**0**	**0.00**	**0.00%**
Rear End	0	1	1	0	**2**	**0.67**	**20.00%**
Head On	0	0	0	0	**0**	**0.00**	**0.00%**
Left Turn	0	1	1	0	**2**	**0.67**	**20.00%**
Sideswipe	0	0	0	0	**0**	**0.00**	**0.00%**
Pedestrian	0	0	0	0	**0**	**0.00**	**0.00%**
Right Turn	0	0	0	0	**0**	**0.00**	**0.00%**
Bicycle	0	0	2	1	**3**	**1.00**	**30.00%**
Other	0	1	0	2	**3**	**1.00**	**30.00%**
Total	***0***	***3***	***4***	***3***	***10***	***-***	***100.00%***
Intersection 23: Belle Terre Parkway at Pine Grove Dr (stop)							
Angle	0	0	3	0	**3**	**1.00**	**15.00%**
Rear End	0	1	2	0	**3**	**1.00**	**15.00%**
Head On	0	0	0	0	**0**	**0.00**	**0.00%**
Left Turn	0	0	3	1	**4**	**1.33**	**20.00%**
Sideswipe	0	0	3	0	**3**	**1.00**	**15.00%**
Pedestrian	0	0	0	0	**0**	**0.00**	**0.00%**
Right Turn	0	0	0	0	**0**	**0.00**	**0.00%**
Bicycle	1	0	0	1	**2**	**0.67**	**10.00%**
Other	0	1	3	1	**5**	**1.67**	**25.00%**
Total	***1***	***2***	***14***	***3***	***20***	***-***	***100.00%***
Intersection 24: Belle Terre Parkway at Whiteview Pkwy (signal)							
Angle	0	1	0	1	**2**	**0.67**	**11.11%**
Rear End	3	3	3	3	**12**	**4.00**	**66.67%**
Head On	0	0	1	0	**1**	**0.33**	**5.56%**
Left Turn	0	0	0	0	**0**	**0.00**	**0.00%**
Sideswipe	0	0	0	0	**0**	**0.00**	**0.00%**
Pedestrian	0	0	0	0	**0**	**0.00**	**0.00%**
Right Turn	0	0	0	0	**0**	**0.00**	**0.00%**
Bicycle	1	1	0	0	**2**	**0.67**	**11.11%**
Other	0	0	1	0	**1**	**0.33**	**5.56%**
Total	***4***	***5***	***5***	***4***	***18***	***-***	***100.00%***

Crash Type	2012	2013	2014	2015	2012-2015	Average per Year	Percent
Intersection 25: Belle Terre Parkway at Whippoorwill Dr (stop)							
Angle	0	0	0	0	**0**	**0.00**	**0.00%**
Rear End	0	1	1	0	**2**	**0.67**	**28.57%**
Head On	0	0	0	0	**0**	**0.00**	**0.00%**
Left Turn	0	1	1	0	**2**	**0.67**	**28.57%**
Sideswipe	0	0	0	1	**1**	**0.33**	**14.29%**
Pedestrian	0	0	0	0	**0**	**0.00**	**0.00%**
Right Turn	0	0	0	0	**0**	**0.00**	**0.00%**
Bicycle	0	0	0	0	**0**	**0.00**	**0.00%**
Other	0	1	0	1	**2**	**0.67**	**28.57%**
Total	***0***	***3***	***2***	***2***	***7***	**-**	***100.00%***
Intersection 26: Belle Terre Parkway at Pritchard Dr (stop)							
Angle	0	0	0	0	**0**	**0.00**	**0.00%**
Rear End	0	0	0	0	**0**	**0.00**	**0.00%**
Head On	0	0	0	0	**0**	**0.00**	**0.00%**
Left Turn	0	0	1	0	**1**	**0.33**	**50.00%**
Sideswipe	0	0	0	0	**0**	**0.00**	**0.00%**
Pedestrian	0	0	0	0	**0**	**0.00**	**0.00%**
Right Turn	0	0	0	0	**0**	**0.00**	**0.00%**
Bicycle	0	0	0	0	**0**	**0.00**	**0.00%**
Other	0	0	0	1	**1**	**0.33**	**50.00%**
Total	***0***	***0***	***1***	***1***	***2***	**-**	***100.00%***
Intersection 27: Belle Terre Parkway at School Entrance (signal)							
Angle	0	0	0	0	**0**	**0.00**	**0.00%**
Rear End	0	1	0	0	**1**	**0.33**	**100.00%**
Head On	0	0	0	0	**0**	**0.00**	**0.00%**
Left Turn	0	0	0	0	**0**	**0.00**	**0.00%**
Sideswipe	0	0	0	0	**0**	**0.00**	**0.00%**
Pedestrian	0	0	0	0	**0**	**0.00**	**0.00%**
Right Turn	0	0	0	0	**0**	**0.00**	**0.00%**
Bicycle	0	0	0	0	**0**	**0.00**	**0.00%**
Other	0	0	0	0	**0**	**0.00**	**0.00%**
Total	***0***	***1***	***0***	***0***	***1***	**-**	***100.00%***

Crash Type	2012	2013	2014	2015	2012-2015	Average per Year	Percent
Intersection 28: Belle Terre Parkway at Parkview Dr (S) (signal)							
Angle	0	0	0	0	**0**	**0.00**	**0.00%**
Rear End	0	0	0	0	**0**	**0.00**	**0.00%**
Head On	0	0	0	0	**0**	**0.00**	**0.00%**
Left Turn	0	0	0	0	**0**	**0.00**	**0.00%**
Sideswipe	0	0	0	0	**0**	**0.00**	**0.00%**
Pedestrian	0	0	0	0	**0**	**0.00**	**0.00%**
Right Turn	0	0	0	0	**0**	**0.00**	**0.00%**
Bicycle	0	0	0	0	**0**	**0.00**	**0.00%**
Other	0	0	0	0	**0**	**0.00**	**0.00%**
Total	***0***	***0***	***0***	***0***	***0***	**-**	***0.00%***
Intersection 29: Belle Terre Parkway at Parkview Dr (N) (stop)							
Angle	0	0	0	0	**0**	**0.00**	**0.00%**
Rear End	0	3	2	3	**8**	**2.67**	**57.14%**
Head On	0	0	0	0	**0**	**0.00**	**0.00%**
Left Turn	0	1	1	0	**2**	**0.67**	**14.29%**
Sideswipe	0	0	0	0	**0**	**0.00**	**0.00%**
Pedestrian	0	0	0	0	**0**	**0.00**	**0.00%**
Right Turn	0	0	0	0	**0**	**0.00**	**0.00%**
Bicycle	0	0	0	0	**0**	**0.00**	**0.00%**
Other	0	2	0	2	**4**	**1.33**	**28.57%**
Total	***0***	***6***	***3***	***5***	***14***	**-**	***100.00%***
Intersection 30: Belle Terre Parkway at Pine Lakes Pkwy (signal)							
Angle	0	1	0	0	**1**	**0.33**	**5.26%**
Rear End	1	1	2	2	**6**	**2.00**	**31.58%**
Head On	0	1	1	0	**2**	**0.67**	**10.53%**
Left Turn	0	1	1	1	**3**	**1.00**	**15.79%**
Sideswipe	0	0	0	0	**0**	**0.00**	**0.00%**
Pedestrian	0	0	0	0	**0**	**0.00**	**0.00%**
Right Turn	0	0	0	0	**0**	**0.00**	**0.00%**
Bicycle	0	0	0	0	**0**	**0.00**	**0.00%**
Other	1	2	2	2	**7**	**2.33**	**36.84%**
Total	***2***	***6***	***6***	***5***	***19***	**-**	***100.00%***

Appendix J

DRI Information

PALM COAST PARK DRI

The Palm Coast Park DRI was approved on December 7, 2004 and amended on October 11, 2012. The approved development plan includes 3,600 dwelling units and 2,480,000 square feet of non-residential space over three phases. The development order has a buildout date through Dec. 31, 2034.

FIGURE 4.2 — PALM COAST PARK DRI MAP AND TABLE

	ENTITLEMENT	DEVELOPMENT APPROVAL	BUILDING PERMITS ISSUED	CONSTRUCTION COMPLETED
RESIDENTIAL	3,600 du	-	-	-
OFFICE	800,000 sf	-	-	-
RETAIL COMMERCIAL	1,500,000 sf	-	-	-
INDUSTRIAL	80,000 sf	-	-	-
INSTITUTIONAL	100,000 sf	-	-	-

TOWN CENTER DRI

The Town Center DRI was approved on July 11, 2003 and the development plan includes 2,500 dwelling units, 4,425,000 square feet of non-residential space, over 3 phases over 17 years through 2020.

FIGURE 4.4 — TOWN CENTER DRI MAP AND TABLE

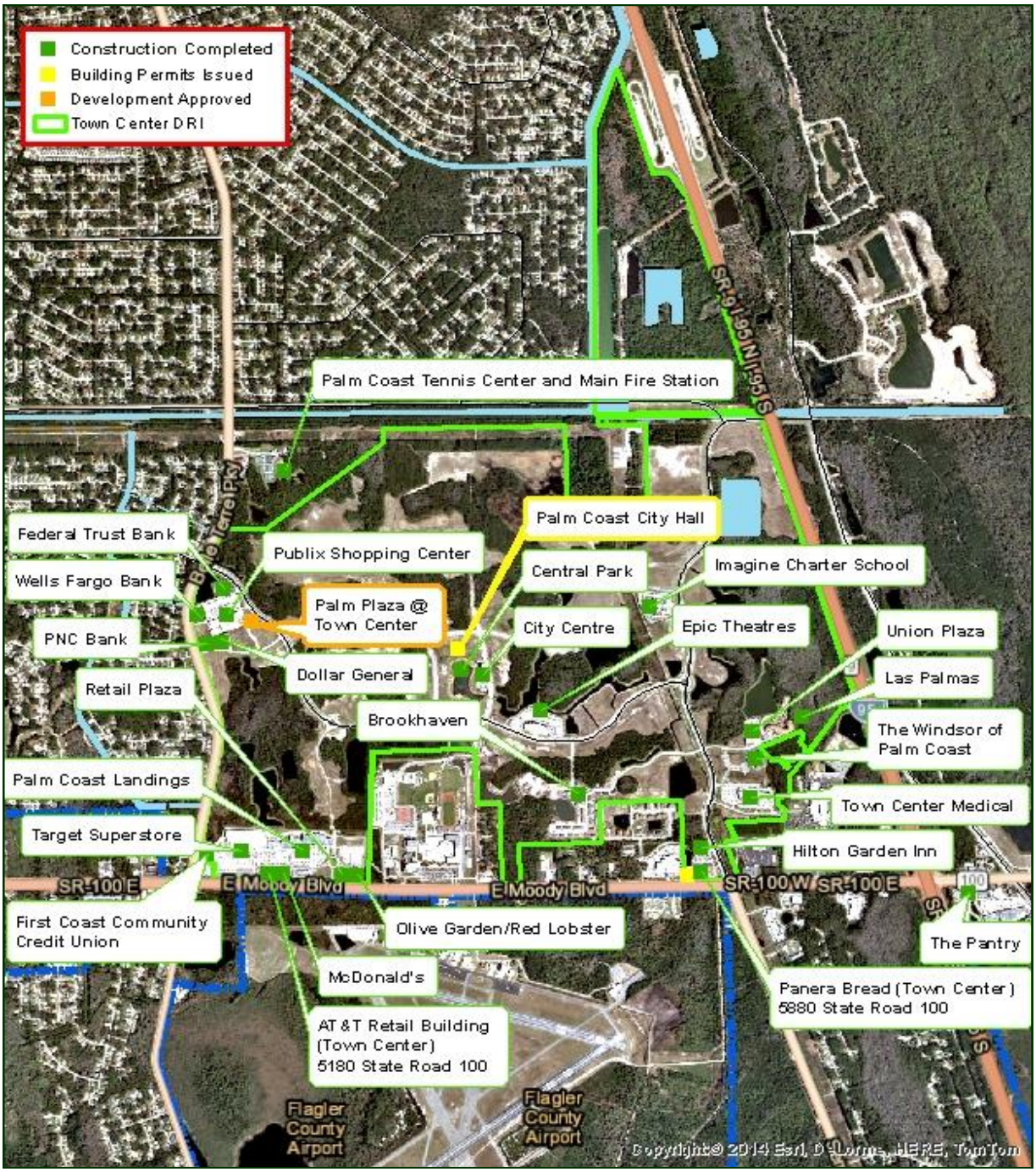

	DRI Entitlement	Development Approval	Building Permits Issued	Construction Completed
Residential	2,500 du	272 du	272 du	156 du
Retail/Comm/Office	4,800,000 sf	738830 sf	699,355 sf	671,011 sf
Movie Theater	2,400 seats	2,224 seats	2,224 seats	2,224 seats
Lodging	480 rooms	201 rooms	121 rooms	121 rooms
Nursing Home	240 beds	84 beds	84 beds	84 beds

NEOGA LAKES DRI

The Neoga Lakes DRI became effective after the settlement of the Department of Community Affairs' appeal on July 27, 2011. The development plan includes 7,000 dwelling units, 2,491,000 square feet of non-residential space (including sites for a school and a wastewater treatment plant), recreation areas, open space and conservation areas. The project has three phases through November 2030.

FIGURE 4.5 — NEOGA LAKES DRI MAP AND TABLE

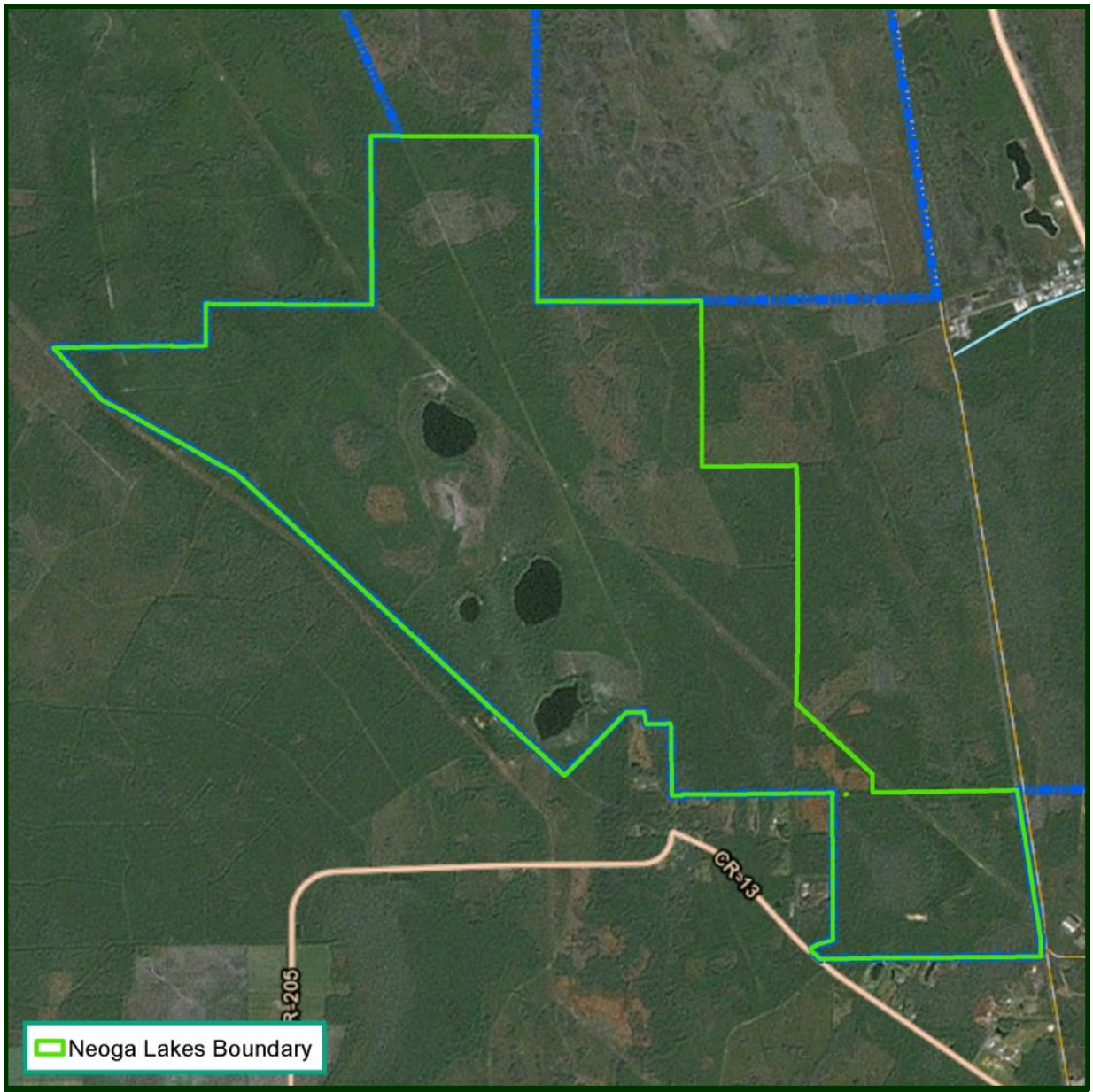

	DRI ENTITLEMENT	DEVELOPMENT APPROVAL	BUILDING PERMITS ISSUED	CONSTRUCTION COMPLETED
RESIDENTIAL	7,000 du	-	-	-
RETAIL USES	354,000 sf	-	-	-
OFFICE USES	45,000 sf	-	-	-
CIVIC USES	222,000 sf	-	-	-
EMPLOYMENT CENTER	1,870,000 sf	-	-	-

Old Brick Township DRI

The Old Brick Township DRI became effective after the settlement of the Department of Community Affairs' appeal on July 27, 2011. The development plan includes 5,000 dwelling units, 1,150,000 square feet of non-residential space, a school site, recreational amenities, and conservation areas. The project has three phases through August 2031.

Figure 4.6 — Old Brick Township DRI Map and Table

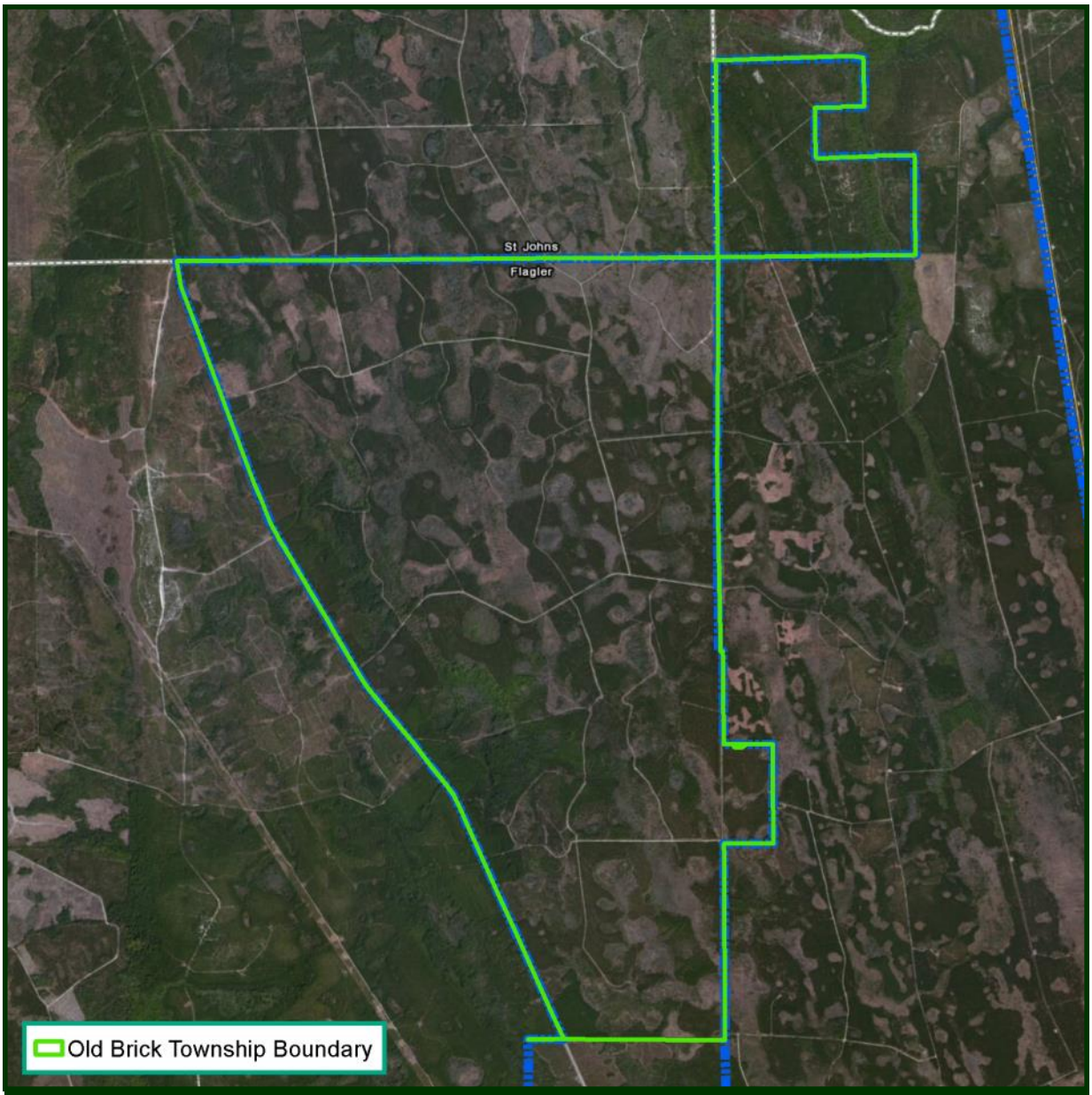

	DRI Entitlement	Development Approval	Building Permits Issued	Construction Completed
Residential	5,000 du	-	-	
Commercial	100,000 sf	-	-	-
Office	50,000 sf	-	-	-
Industrial	1,000,000 sf	-	-	-

Appendix K

Trends Analysis Sheets

Traffic Trends - V3.0

BELLE TERR PARKWAY -- N of US-1

FIN#	0
Location	1

County:	Flagler (73)
Station #:	8004
Highway:	BELLE TERR PARKWAY

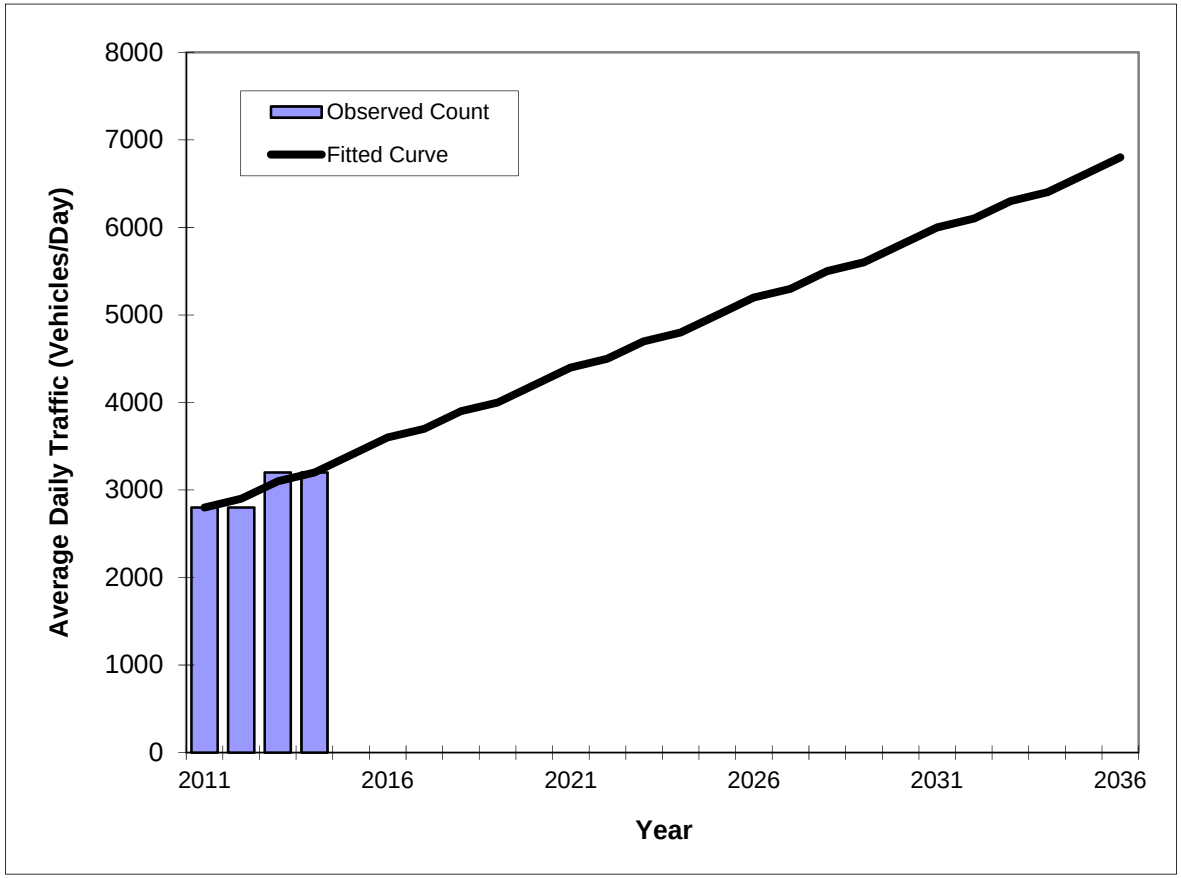

Year	Traffic (ADT/AADT) Count*	Trend**
2011	2800	2800
2012	2800	2900
2013	3200	3100
2014	3200	3200
2020 Opening Year Trend		
2020	N/A	4200
2025 Mid-Year Trend		
2025	N/A	5000
2030 Design Year Trend		
2030	N/A	5800
TRANPLAN Forecasts/Trends		

*Axle-Adjusted

** Annual Trend Increase:	160
Trend R-squared:	80.00%
Trend Annual Historic Growth Rate:	4.76%
Trend Growth Rate (2014 to Design Year):	5.08%
Printed:	22-Oct-15

Straight Line Growth Option

Traffic Trends - V3.0

BELLE TERR PARKWAY -- US-1 to Moody Blvd

FIN#	0
Location	1

County:	Flagler (73)
Station #:	7002
Highway:	BELLE TERR PARKWAY

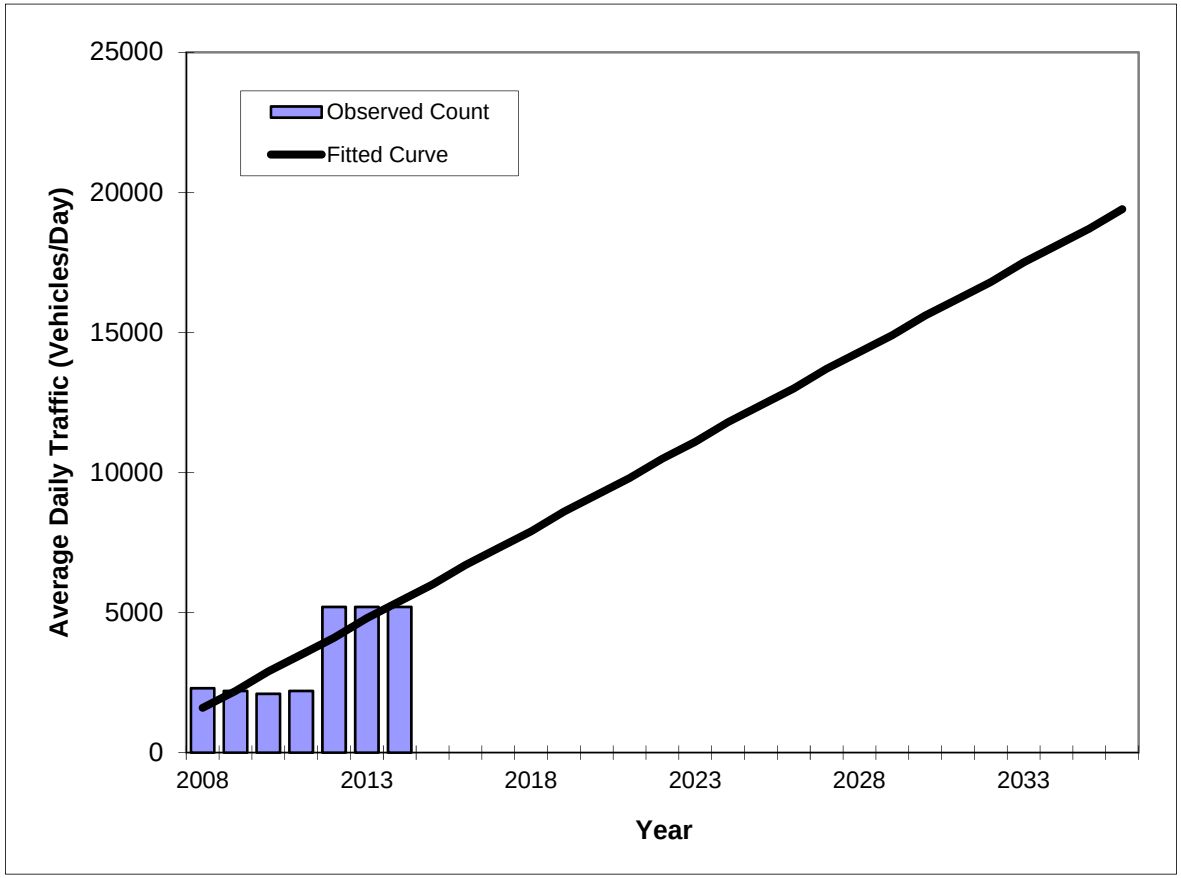

Year	Traffic (ADT/AADT) Count*	Trend**
2008	2300	1600
2009	2200	2200
2010	2100	2900
2011	2200	3500
2012	5200	4100
2013	5200	4800
2014	5200	5400
2020 Opening Year Trend		
2020	N/A	9200
2025 Mid-Year Trend		
2025	N/A	12400
2030 Design Year Trend		
2030	N/A	15600
TRANPLAN Forecasts/Trends		

*Axle-Adjusted

** Annual Trend Increase:	636
Trend R-squared:	73.25%
Trend Annual Historic Growth Rate:	39.58%
Trend Growth Rate (2014 to Design Year):	11.81%
Printed:	22-Oct-15

Straight Line Growth Option

Traffic Trends - V3.0

BELLE TERR PARKWAY -- N of SR 100

FIN#	0
Location	1

County:	Flagler (73)
Station #:	8024
Highway:	BELLE TERR PARKWAY

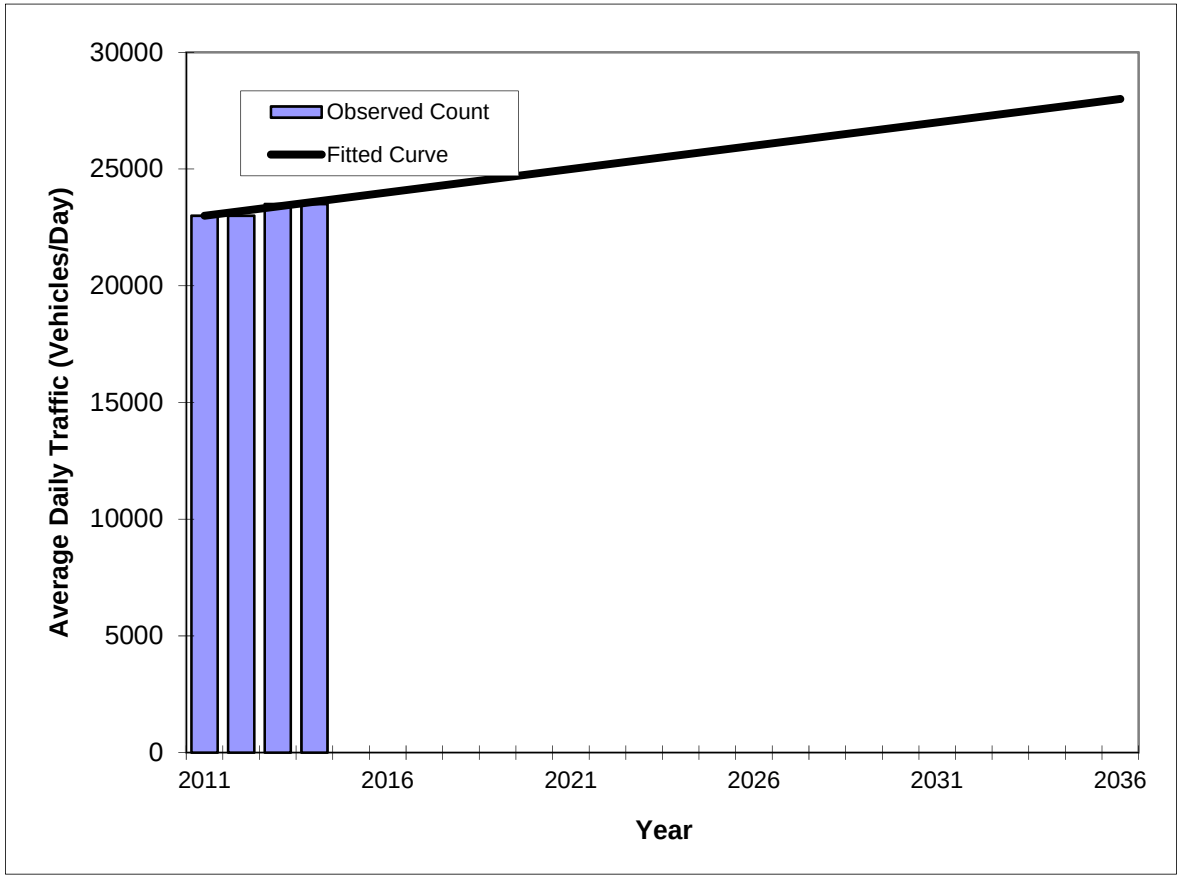

Year	Traffic (ADT/AADT) Count*	Trend**
2011	23000	23000
2012	23000	23200
2013	23500	23400
2014	23500	23600
2020 Opening Year Trend		
2020	N/A	24800
2025 Mid-Year Trend		
2025	N/A	25800
2030 Design Year Trend		
2030	N/A	26800
TRANPLAN Forecasts/Trends		

*Axle-Adjusted

** Annual Trend Increase:	200
Trend R-squared:	80.00%
Trend Annual Historic Growth Rate:	0.87%
Trend Growth Rate (2014 to Design Year):	0.85%
Printed:	22-Oct-15

Straight Line Growth Option

Traffic Trends - V3.0

SR 100 -- E of Belle Terre Pkwy

FIN#	0
Location	1

County:	Flagler (73)
Station #:	0002
Highway:	SR 100

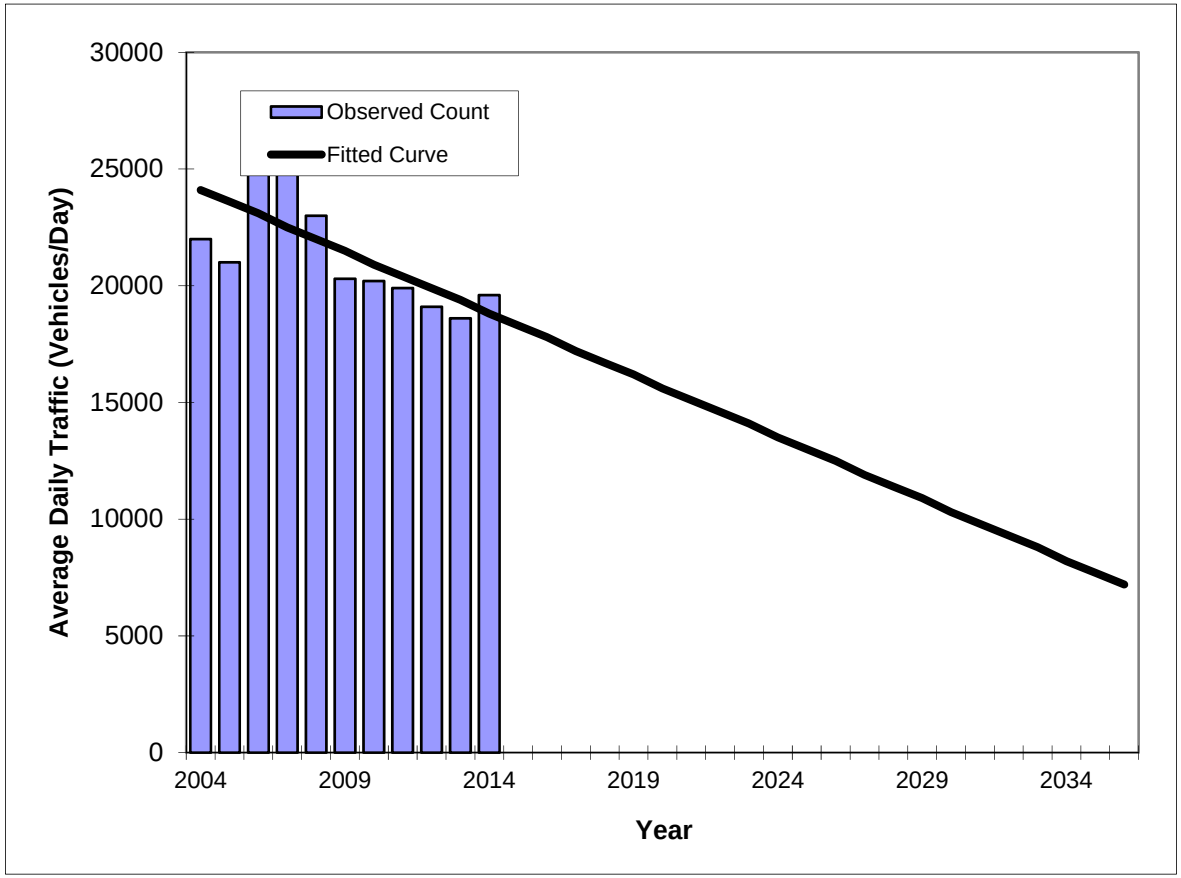

Year	Traffic (ADT/AADT) Count*	Trend**
2004	22000	24100
2005	21000	23600
2006	26000	23100
2007	26500	22500
2008	23000	22000
2009	20300	21500
2010	20200	20900
2011	19900	20400
2012	19100	19900
2013	18600	19400
2014	19600	18800
2020 Opening Year Trend		
2020	N/A	15600
2025 Mid-Year Trend		
2025	N/A	13000
2030 Design Year Trend		
2030	N/A	10300
TRANPLAN Forecasts/Trends		

*Axle-Adjusted

** Annual Trend Increase:	-530
Trend R-squared:	43.24%
Trend Annual Historic Growth Rate:	-2.20%
Trend Growth Rate (2014 to Design Year):	-2.83%
Printed:	23-Oct-15

Straight Line Growth Option

Traffic Trends - V3.0

SR 100 -- NE of US-1

FIN#	0
Location	1

County:	Flagler (73)
Station #:	0054
Highway:	SR 100

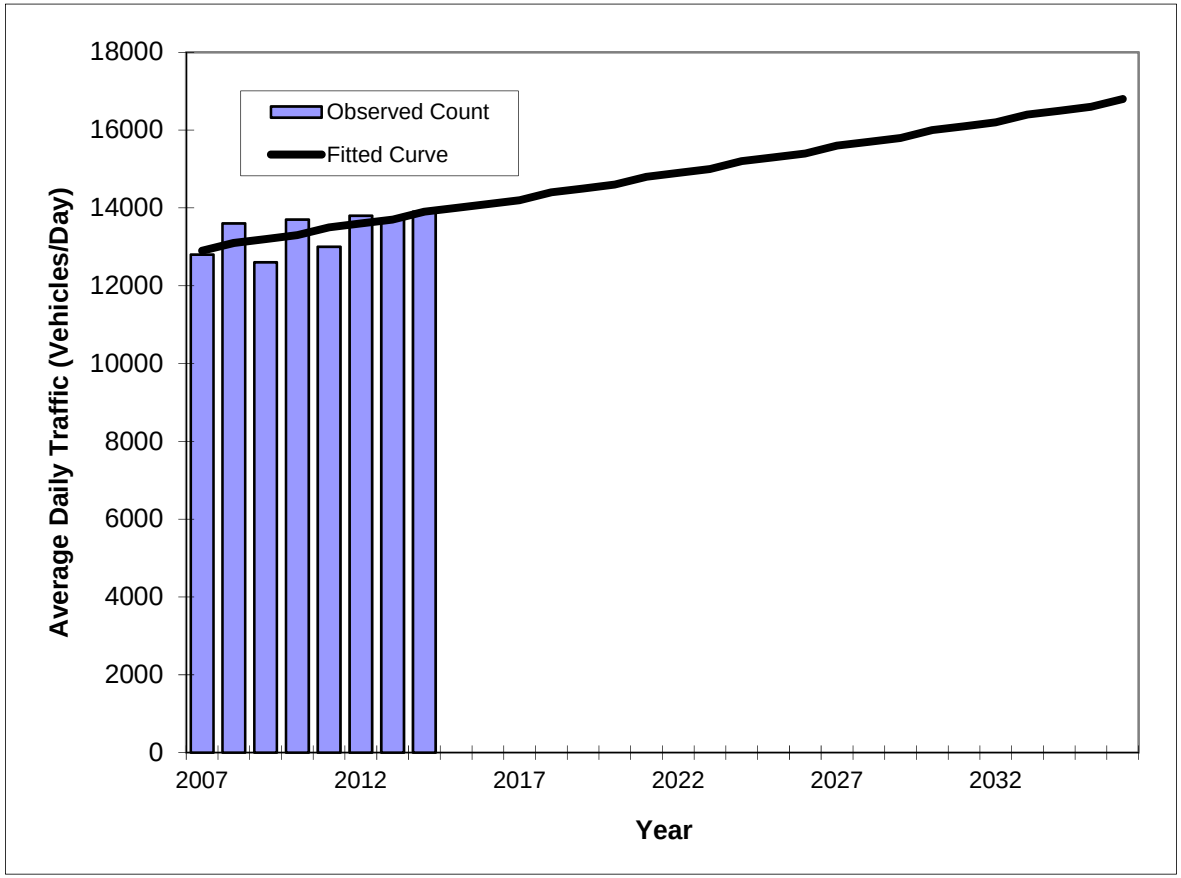

Year	Traffic (ADT/AADT) Count*	Trend**
2007	12800	12900
2008	13600	13100
2009	12600	13200
2010	13700	13300
2011	13000	13500
2012	13800	13600
2013	13700	13700
2014	13900	13900
2020 Opening Year Trend		
2020	N/A	14600
2025 Mid-Year Trend		
2025	N/A	15300
2030 Design Year Trend		
2030	N/A	16000
TRANPLAN Forecasts/Trends		

*Axle-Adjusted

** Annual Trend Increase:	132
Trend R-squared:	41.00%
Trend Annual Historic Growth Rate:	1.11%
Trend Growth Rate (2014 to Design Year):	0.94%
Printed:	23-Oct-15

Straight Line Growth Option

Traffic Trends - V3.0

SR-5/US-1 -- S of SR 11

FIN#	0
Location	1

County:	Flagler (73)
Station #:	0101
Highway:	SR-5/US-1

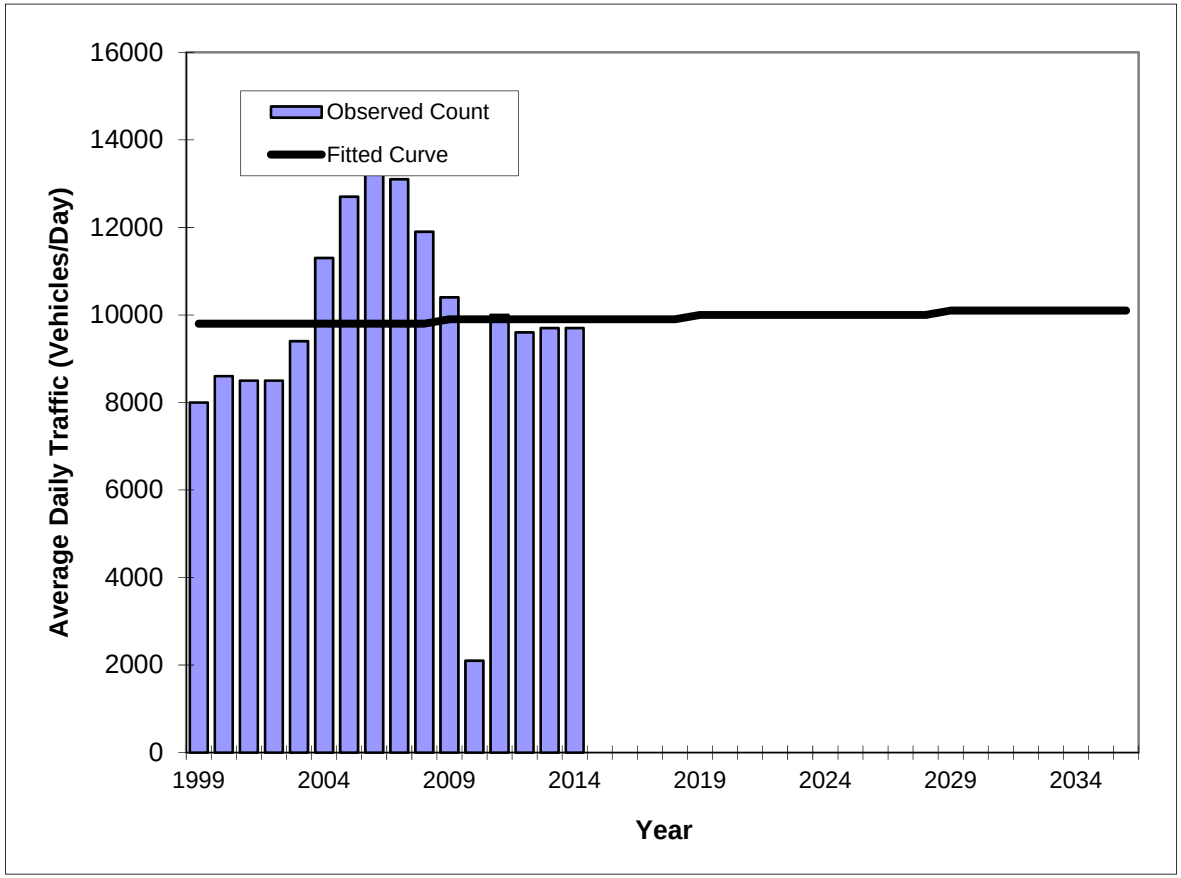

Year	Traffic (ADT/AADT) Count*	Trend**
1999	8000	9800
2000	8600	9800
2001	8500	9800
2002	8500	9800
2003	9400	9800
2004	11300	9800
2005	12700	9800
2006	13800	9800
2007	13100	9800
2008	11900	9800
2009	10400	9900
2010	2100	9900
2011	10000	9900
2012	9600	9900
2013	9700	9900
2014	9700	9900
2020 Opening Year Trend		
2020	N/A	10000
2025 Mid-Year Trend		
2025	N/A	10000
2030 Design Year Trend		
2030	N/A	10100
TRANPLAN Forecasts/Trends		

** Annual Trend Increase:	10
Trend R-squared:	0.03%
Trend Annual Historic Growth Rate:	0.07%
Trend Growth Rate (2014 to Design Year):	0.13%
Printed:	22-Oct-15

Straight Line Growth Option

*Axle-Adjusted

Traffic Trends - V3.0

US-1/SR-5 -- N of Old Dixie Hwy

FIN#	0
Location	1

County:	Flagler (73)
Station #:	0235
Highway:	US-1/SR-5

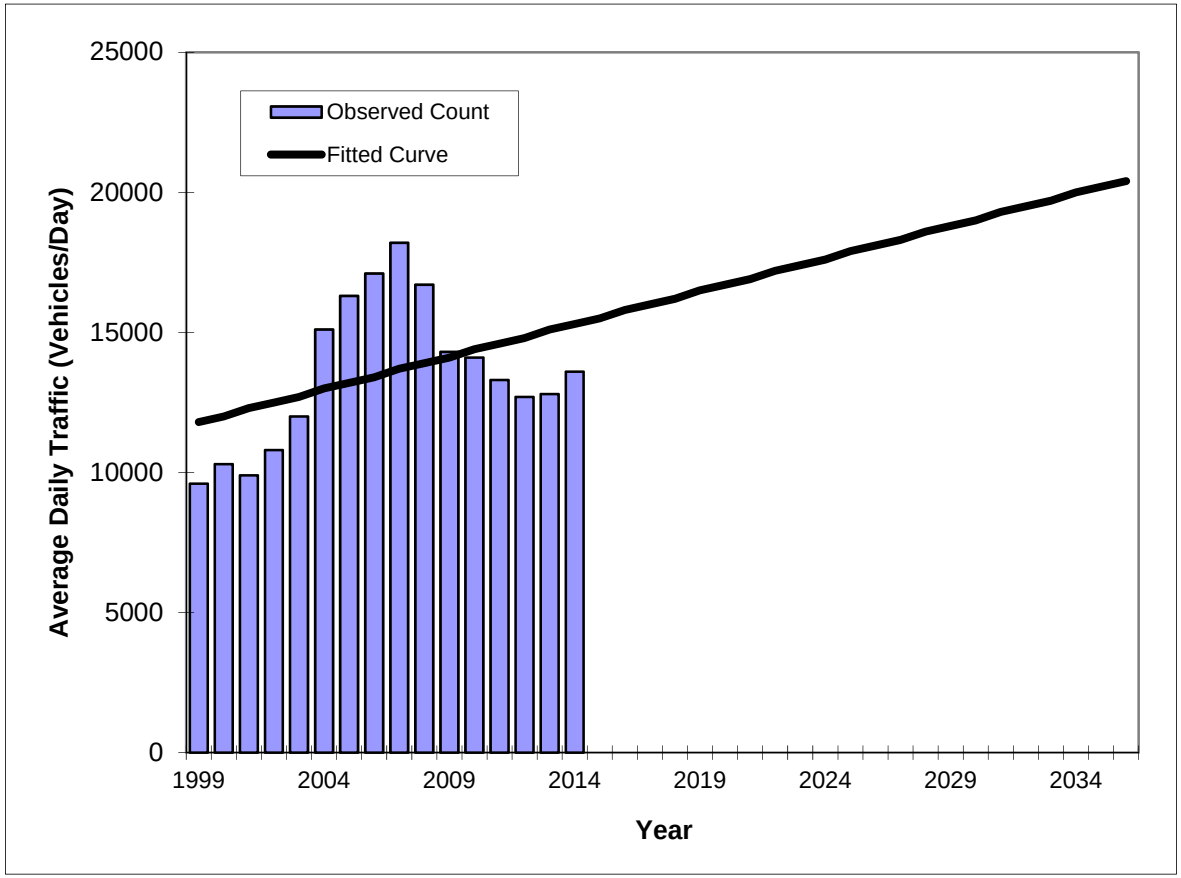

Year	Traffic (ADT/AADT) Count*	Trend**
1999	9600	11800
2000	10300	12000
2001	9900	12300
2002	10800	12500
2003	12000	12700
2004	15100	13000
2005	16300	13200
2006	17100	13400
2007	18200	13700
2008	16700	13900
2009	14300	14100
2010	14100	14400
2011	13300	14600
2012	12700	14800
2013	12800	15100
2014	13600	15300
2020 Opening Year Trend		
2020	N/A	16700
2025 Mid-Year Trend		
2025	N/A	17900
2030 Design Year Trend		
2030	N/A	19000
TRANPLAN Forecasts/Trends		

** Annual Trend Increase:	234
Trend R-squared:	17.53%
Trend Annual Historic Growth Rate:	1.98%
Trend Growth Rate (2014 to Design Year):	1.51%
Printed:	23-Oct-15

Straight Line Growth Option

*Axle-Adjusted

Appendix L

BEBR Population Projections for Flagler County

Projections of Florida Population by County, 2015–2040, with Estimates for 2013 (continued)

County and State	Estimates April 1, 2013	Projections, April 1 2015	2020	2025	2030	2035	2040
DUVAL	876,075						
Low		837,300	850,000	855,800	855,000	851,600	842,200
Medium		890,700	934,100	972,500	1,005,800	1,038,500	1,066,100
High		944,100	1,018,200	1,089,200	1,156,700	1,225,500	1,290,000
ESCAMBIA	301,120						
Low		284,700	280,500	275,400	269,500	262,800	255,600
Medium		302,900	308,200	312,900	317,000	320,500	323,600
High		321,000	336,000	350,500	364,600	378,200	391,500
FLAGLER	97,843						
Low		96,600	109,900	117,600	122,100	123,800	122,800
Medium		105,000	124,900	143,400	160,700	176,900	191,900
High		113,400	139,800	169,300	199,300	230,000	260,900
FRANKLIN	11,562						
Low		10,700	10,300	9,800	9,300	8,900	8,400
Medium		11,700	11,700	11,700	11,700	11,700	11,700
High		12,600	13,100	13,500	14,000	14,500	14,900
GADSDEN	47,588						
Low		45,400	44,800	44,100	43,000	41,800	40,400
Medium		48,300	49,300	50,100	50,600	50,900	51,100
High		51,200	53,700	56,100	58,200	60,100	61,800
GILCHRIST	16,880						
Low		15,800	16,000	16,100	16,000	15,800	15,400
Medium		17,200	18,200	19,100	20,000	20,700	21,400
High		18,600	20,400	22,200	24,000	25,700	27,400
GLADES	12,658						
Low		11,900	11,900	11,800	11,600	11,300	11,000
Medium		12,900	13,500	14,000	14,500	14,900	15,200
High		13,900	15,100	16,300	17,400	18,500	19,500
GULF	16,106						
Low		14,900	14,400	13,900	13,300	12,700	12,100
Medium		16,200	16,400	16,500	16,600	16,700	16,800
High		17,500	18,400	19,200	19,900	20,700	21,500
HAMILTON	14,507						
Low		13,500	13,400	13,100	12,800	12,400	11,900
Medium		14,700	15,200	15,600	16,000	16,300	16,600
High		15,900	17,000	18,100	19,200	20,200	21,200
HARDEE	27,682						
Low		26,100	25,400	24,700	24,000	23,200	22,500
Medium		27,700	28,000	28,000	28,200	28,300	28,500
High		29,400	30,500	31,400	32,400	33,400	34,400
HENDRY	37,808						
Low		35,800	35,500	35,000	34,200	33,300	32,300
Medium		38,100	39,000	39,700	40,300	40,700	40,900
High		40,400	42,500	44,500	46,300	48,000	49,500
HERNANDO	173,808						
Low		169,400	178,200	184,600	188,700	190,900	191,000
Medium		180,200	198,000	214,700	230,200	244,700	258,100
High		191,000	217,800	244,800	271,600	298,600	325,200
HIGHLANDS	99,092						
Low		94,800	96,400	97,300	97,600	97,000	95,800
Medium		100,900	105,900	110,600	114,800	118,200	121,200
High		106,900	115,500	123,900	132,000	139,500	146,700
HILLSBOROUGH	1,276,410						
Low		1,240,600	1,315,300	1,375,700	1,416,300	1,443,000	1,457,600
Medium		1,319,700	1,445,300	1,563,300	1,666,200	1,759,800	1,845,000
High		1,398,900	1,575,400	1,750,900	1,916,100	2,076,500	2,232,500

Appendix M

Year 2030 Model Plots, MOCF and Selected Link Analysis

Year 2030 Output (PSWADT)

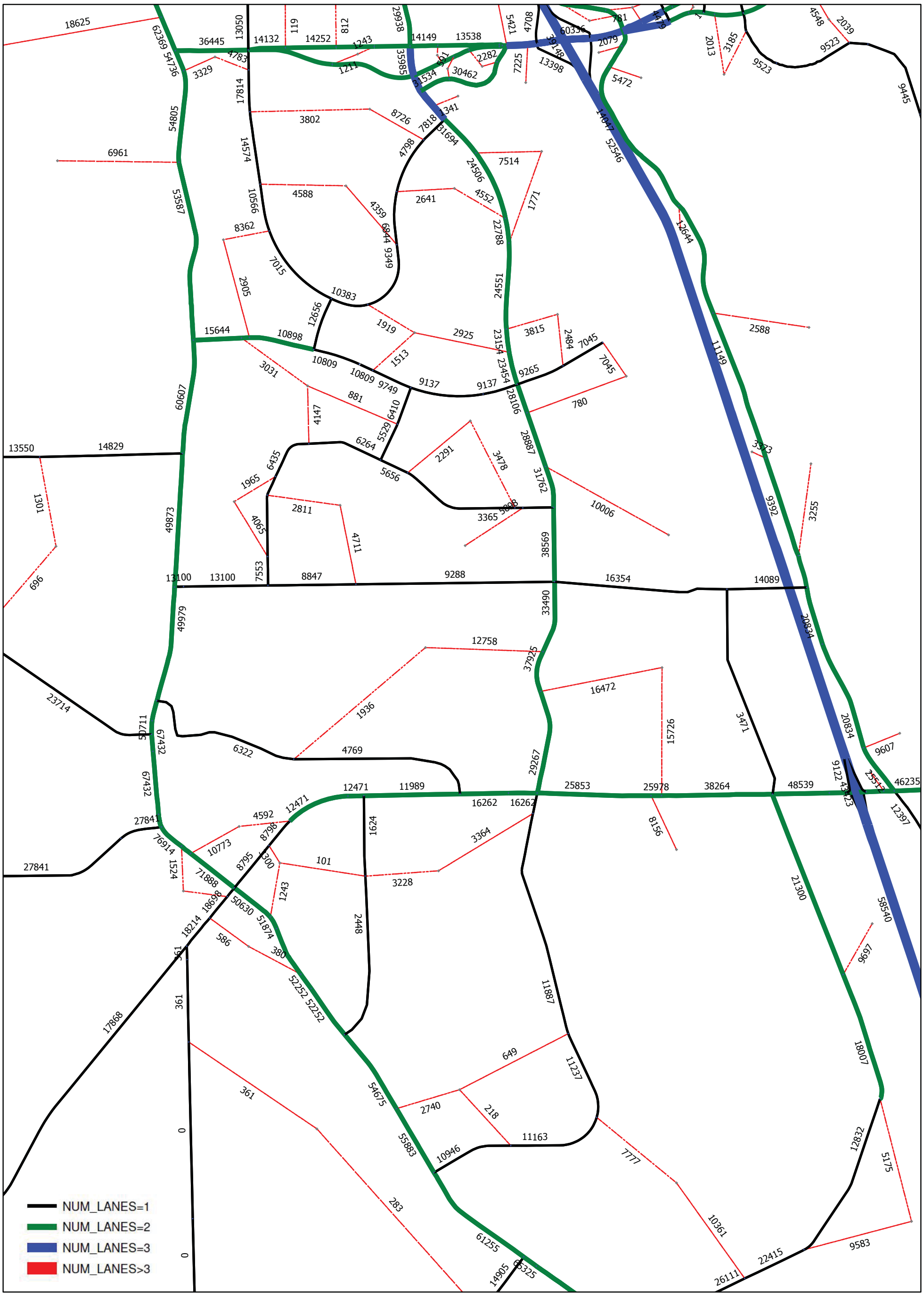

2014 PEAK SEASON FACTOR CATEGORY REPORT - REPORT TYPE: ALL
CATEGORY: 7300 FLAGLER COUNTYWIDE

MOCF: 0.94

WEEK	DATES	SF	PSCF
1	01/01/2014 - 01/04/2014	1.00	1.06
2	01/05/2014 - 01/11/2014	1.05	1.12
3	01/12/2014 - 01/18/2014	1.10	1.17
4	01/19/2014 - 01/25/2014	1.09	1.16
5	01/26/2014 - 02/01/2014	1.08	1.15
6	02/02/2014 - 02/08/2014	1.06	1.13
7	02/09/2014 - 02/15/2014	1.05	1.12
8	02/16/2014 - 02/22/2014	1.03	1.10
9	02/23/2014 - 03/01/2014	1.00	1.06
*10	03/02/2014 - 03/08/2014	0.97	1.03
*11	03/09/2014 - 03/15/2014	0.94	1.00
*12	03/16/2014 - 03/22/2014	0.90	0.96
*13	03/23/2014 - 03/29/2014	0.91	0.97
*14	03/30/2014 - 04/05/2014	0.92	0.98
*15	04/06/2014 - 04/12/2014	0.93	0.99
*16	04/13/2014 - 04/19/2014	0.94	1.00
*17	04/20/2014 - 04/26/2014	0.95	1.01
*18	04/27/2014 - 05/03/2014	0.95	1.01
*19	05/04/2014 - 05/10/2014	0.96	1.02
*20	05/11/2014 - 05/17/2014	0.96	1.02
*21	05/18/2014 - 05/24/2014	0.97	1.03
*22	05/25/2014 - 05/31/2014	0.98	1.04
23	06/01/2014 - 06/07/2014	0.98	1.04
24	06/08/2014 - 06/14/2014	0.99	1.05
25	06/15/2014 - 06/21/2014	0.99	1.05
26	06/22/2014 - 06/28/2014	0.99	1.05
27	06/29/2014 - 07/05/2014	0.99	1.05
28	07/06/2014 - 07/12/2014	0.99	1.05
29	07/13/2014 - 07/19/2014	0.99	1.05
30	07/20/2014 - 07/26/2014	1.00	1.06
31	07/27/2014 - 08/02/2014	1.00	1.06
32	08/03/2014 - 08/09/2014	1.00	1.06
33	08/10/2014 - 08/16/2014	1.01	1.07
34	08/17/2014 - 08/23/2014	1.01	1.07
35	08/24/2014 - 08/30/2014	1.02	1.09
36	08/31/2014 - 09/06/2014	1.04	1.11
37	09/07/2014 - 09/13/2014	1.05	1.12
38	09/14/2014 - 09/20/2014	1.07	1.14
39	09/21/2014 - 09/27/2014	1.04	1.11
40	09/28/2014 - 10/04/2014	1.01	1.07
41	10/05/2014 - 10/11/2014	0.99	1.05
42	10/12/2014 - 10/18/2014	0.96	1.02
43	10/19/2014 - 10/25/2014	0.97	1.03
44	10/26/2014 - 11/01/2014	0.98	1.04
45	11/02/2014 - 11/08/2014	0.99	1.05
46	11/09/2014 - 11/15/2014	1.00	1.06
47	11/16/2014 - 11/22/2014	1.01	1.07
48	11/23/2014 - 11/29/2014	1.01	1.07
49	11/30/2014 - 12/06/2014	1.01	1.07
50	12/07/2014 - 12/13/2014	1.01	1.07
51	12/14/2014 - 12/20/2014	1.00	1.06
52	12/21/2014 - 12/27/2014	1.05	1.12
53	12/28/2014 - 12/31/2014	1.10	1.17

* PEAK SEASON

Year 2030 - Belle Terre Blvd Selected Link Analysis (PSWADT)

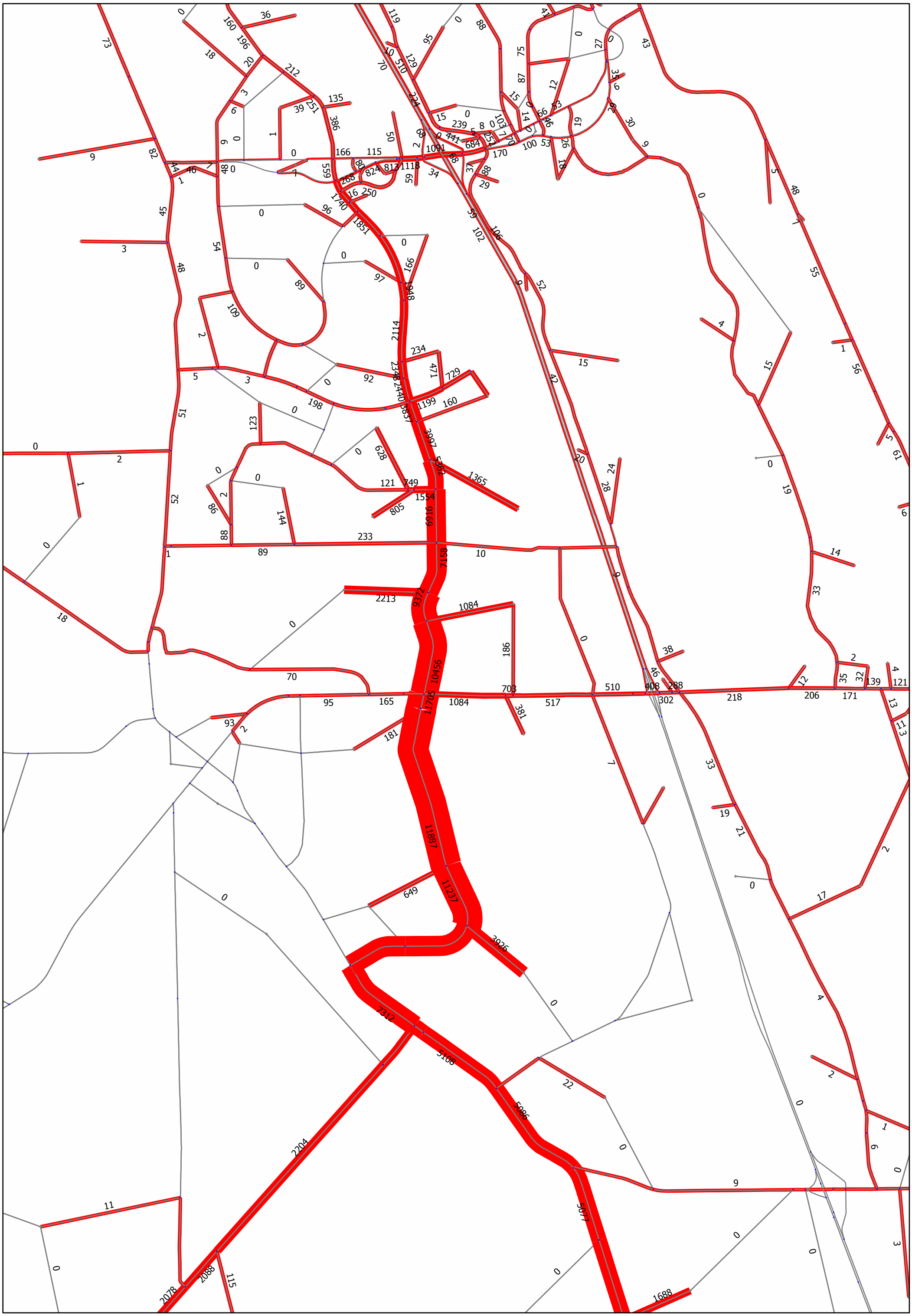

Year 2030 - Belle Terre Blvd Selected Link Analysis (Percentage)

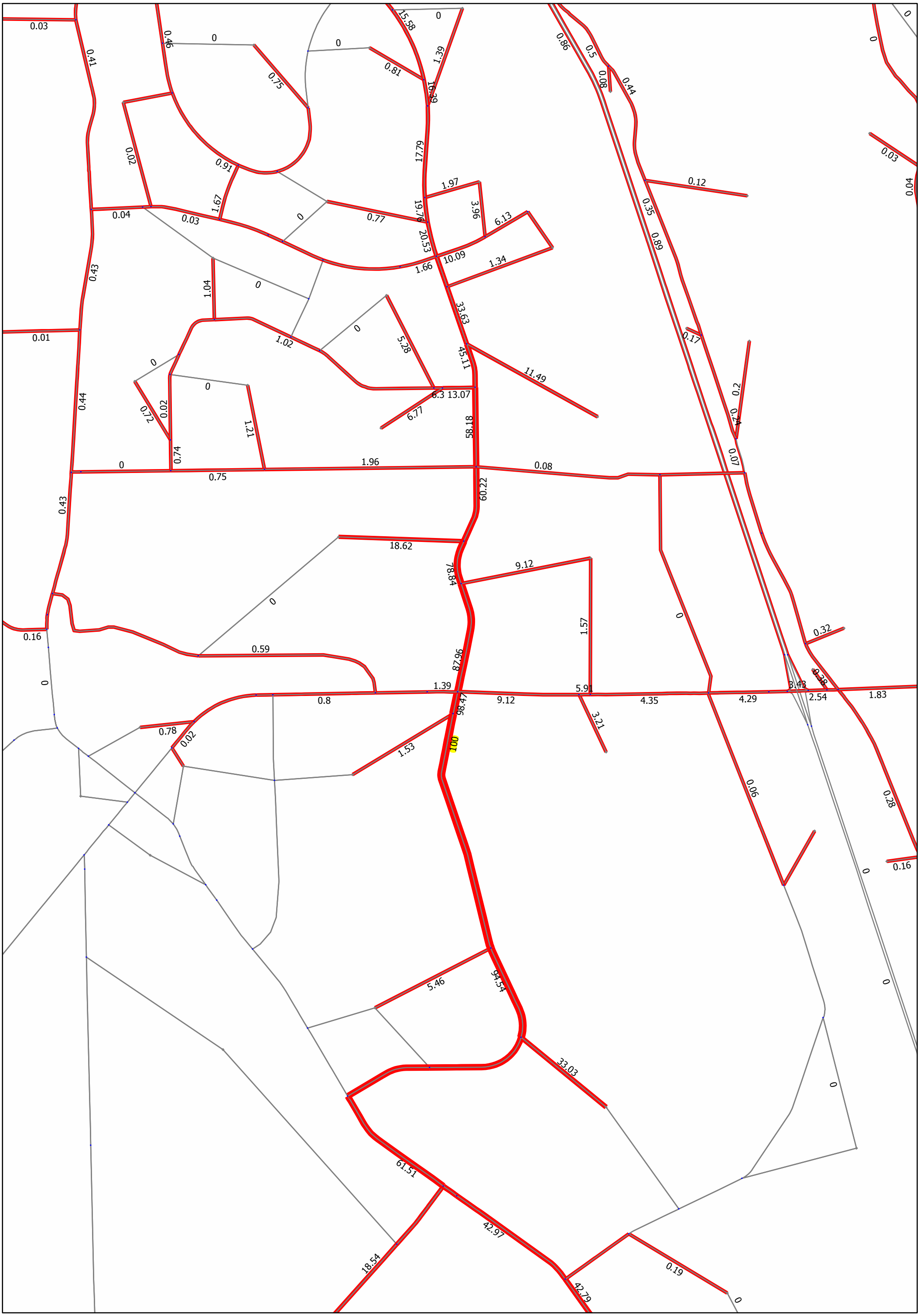

Appendix N

TURNS5 Sheets

TURNS5 ANALYSIS SHEET - INPUT

Analyst:	-
Date:	12-Nov-15
Highway:	Belle Terre Blvd- AM
Intersection:	US-1
Project:	Belle Terre Blvd/Pkwy Intersection Analysis
County:	Flagler

Is this a 4 way intersection?

- ○ Yes, my intersection has four approaches

If not, which 3 approaches exist in the intersection?

- ○ EB, WB, and SB
- ○ EB, WB, and NB
- ○ EB, SB, and NB
- ◉ WB, SB, and NB

Is the Mainline Oriented North/South? (Enter Yes or No)

- ○ Yes
- ◉ No

K Factors	
Mainline	9.00%
Side street	9.00%

D Factors	*Mainline*
Westbound (WB)	59.0%
Eastbound (EB)	0.0%
	Side street
Northbound (NB)	39.0%
Southbound (SB)	61.0%

Do you have FTSUTMS Model Year traffic from which you would like to interpolate/extrapolate for project years? (Y/N) (Enter Yes or No)

- ◉ Yes
- ○ No

If "Yes" go to cell C47 — If "No" go to cell C31

Enter Year and Growth Rates from Base Year:

	Year	*Rate* (1.0% = 0.01) **Mainline**	**Side Street**
Base	2015	0.00%	0.00%
Opening	2025		
Mid	2035		
Design	2045		

Mainline Growth Function

- ◉ Linear
- ○ Exponential
- ○ Decaying

Side Street Growth Function

- ◉ Linear
- ○ Exponential
- ○ Decaying

Enter Base Year AADTs for Volume Comparison:
(growth rates are used to calculate other project years)

From West: EB Approach	*From East: WB Approach*	*From North: SB Approach*	*From South: NB Approach*	***TOTAL***
0	0	0	0	0

Enter Project and Model Years

	Year
Base	2015
Opening	2020
Mid	2025
Design	2030
Model	2030

Enter Base and Model Year AADTs for Volume Comparison:
(volumes for other project years are calculated by interpolation)

	From West: EB Approach	*From East: WB Approach*	*From North: SB Approach*	*From South: NB Approach*	***TOTAL***
2015	0	3900	9700	13600	27200
2030	0	7100	19000	26000	52100

First Guess Turning % Option Used
Existing Turning Movement Counts

		1st Guess Turning %'s for AADT Balancing	**Actual/Counted Traffic for 2015**
(EB LT)	*West-to-North*	0.0%	0
(EB THRU)	*West-to-East*	0.0%	0
(EB RT)	*West-to-South*	0.0%	0
(WB LT)	*East-to-South*	81.0%	192
(WB THRU)	*East-to-West*	0.0%	0
(WB RT)	*East-to-North*	19.0%	45
(SB LT)	*North-to-East*	2.1%	10
(SB THRU)	*North-to-South*	97.9%	473
(SB RT)	*North-to-West*	0.0%	0
(NB LT)	*South-to-West*	0.0%	0
(NB THRU)	*South-to-North*	85.7%	418
(NB RT)	*South-to-East*	14.3%	70

Desired Closure: 3.00

Existing Year AADTs — Only the existing year total departure volumes [AADT*K*(1-D)] will be used to calculate the turning percentages first guess.

Existing Turning Movement Counts — The turning percentages first guess is the same as the ***actual distribution of turning volumes entered***. No balancing technique is used.

FSUTMS Model Year AADTs — Only the FSUTMS model year departure volumes [AADT*K*(1-D)] will be used to calculate the turning percentages first guess.

PROJECT TRAFFIC FOR Belle Terre Blvd- AM AT US-1

DESIGN HOUR TURNING MOVEMENTS IN YEAR 2015

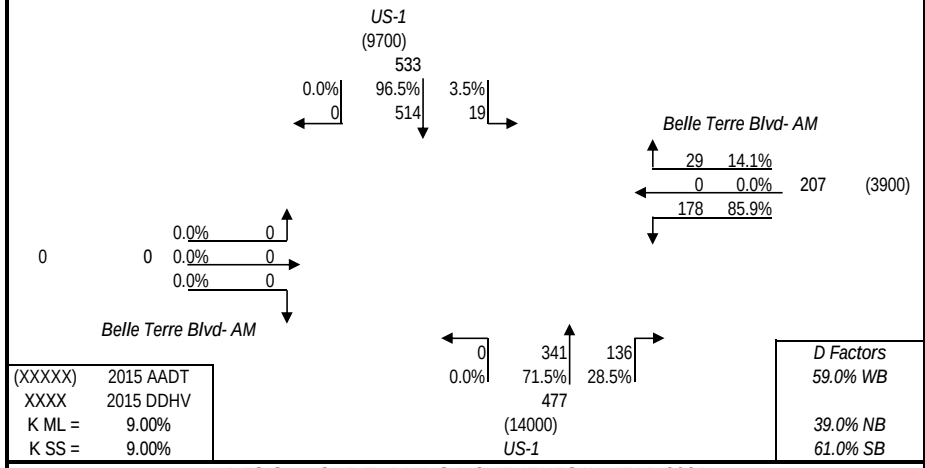

(XXXXX)	2015 AADT
XXXX	2015 DDHV
K ML =	9.00%
K SS =	9.00%

D Factors
59.0% WB
39.0% NB
61.0% SB

DESIGN HOUR TURNING MOVEMENTS IN YEAR 2020

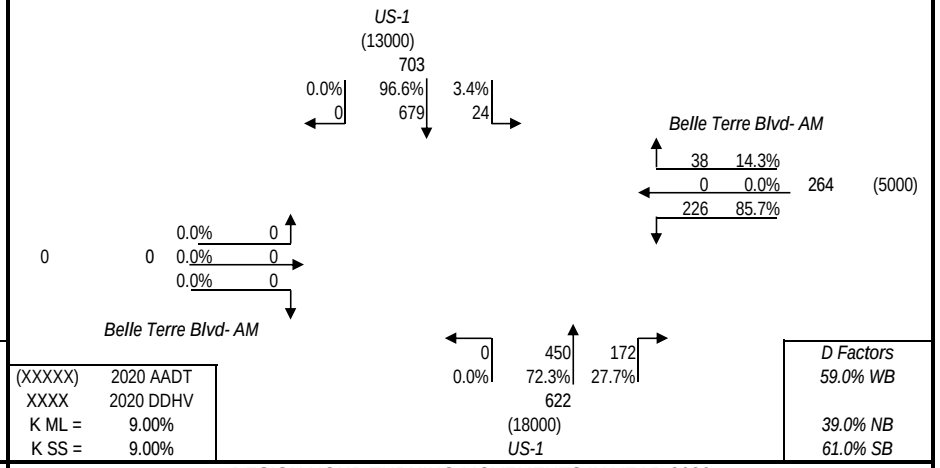

(XXXXX)	2020 AADT
XXXX	2020 DDHV
K ML =	9.00%
K SS =	9.00%

D Factors
59.0% WB
39.0% NB
61.0% SB

DESIGN HOUR TURNING MOVEMENTS IN YEAR 2025

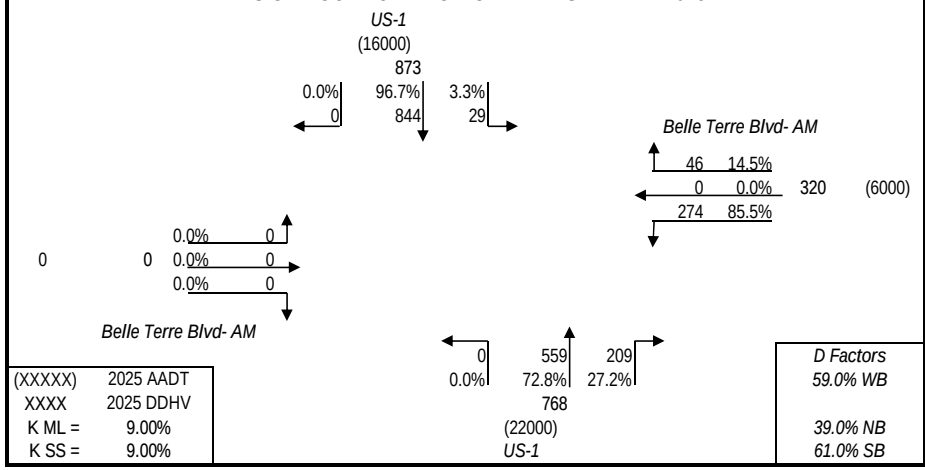

(XXXXX)	2025 AADT
XXXX	2025 DDHV
K ML =	9.00%
K SS =	9.00%

D Factors
59.0% WB
39.0% NB
61.0% SB

DESIGN HOUR TURNING MOVEMENTS IN YEAR 2030

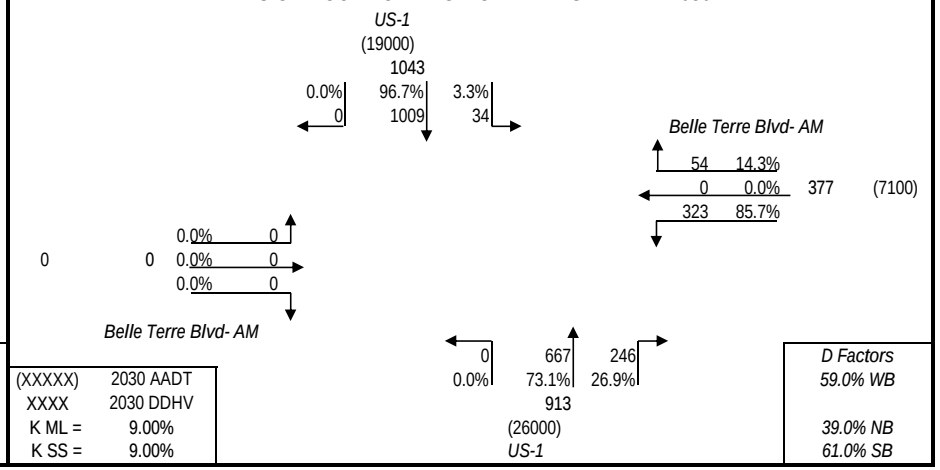

(XXXXX)	2030 AADT
XXXX	2030 DDHV
K ML =	9.00%
K SS =	9.00%

D Factors
59.0% WB
39.0% NB
61.0% SB

PROJECT TRAFFIC FOR Belle Terre Blvd- AM AT US-1

2015 INPUT TMCs COMPARED TO 2015 DHV

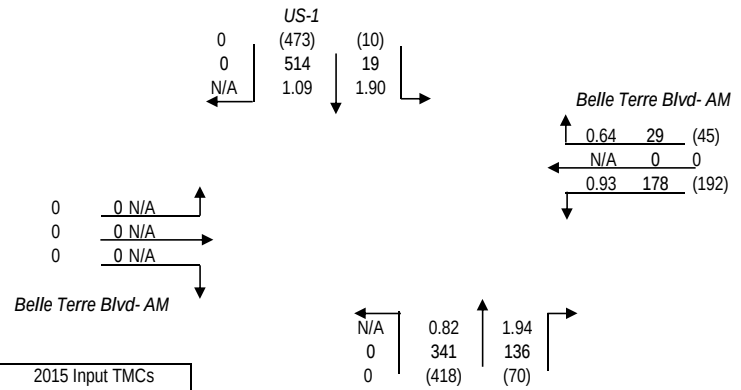

(XXX)	2015 Input TMCs
XXX	Calculated 2015 DHV
X.XX	Ratio

2015 INPUT TMCs COMPARED TO 2020 DHV

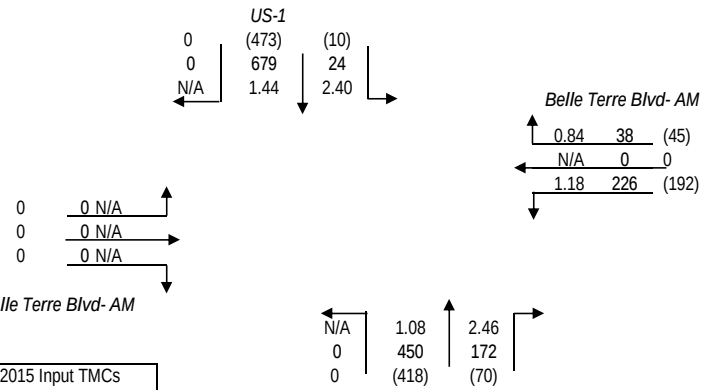

(XXX)	2015 Input TMCs
XXX	Calculated 2020 DHV
X.XX	Ratio

2015 INPUT TMCs COMPARED TO 2025 DHV

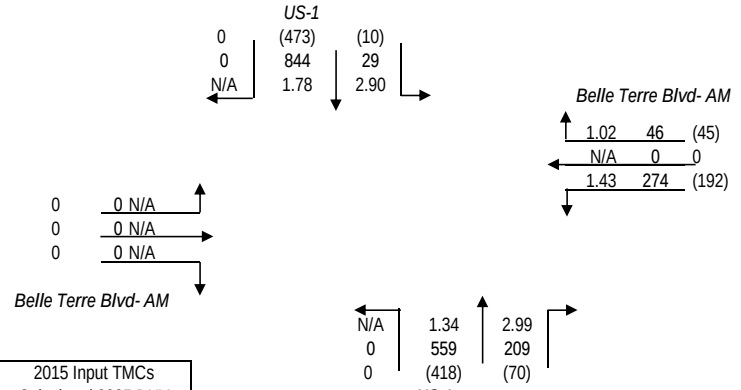

(XXX)	2015 Input TMCs
XXX	Calculated 2025 DHV
X.XX	Ratio

2015 INPUT TMCs COMPARED TO 2030 DHV

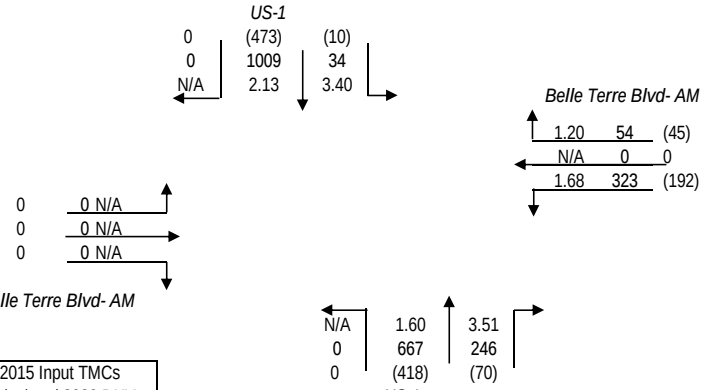

(XXX)	2015 Input TMCs
XXX	Calculated 2030 DHV
X.XX	Ratio

TURNS5 ANALYSIS SHEET - INPUT

Analyst:	-
Date:	12-Nov-15
Highway:	Belle Terre Blvd
Intersection:	Kaywood Pl/Kankakee Tr- AM
Project:	Belle Terre Blvd/Pkwy Intersection Analysis
County:	Flagler

Is this a 4 way intersection?

- (●) Yes, my intersection has four approaches

If not, which 3 approaches exist in the intersection?

- ( ) EB, WB, and SB
- ( ) EB, WB, and NB
- ( ) EB, SB, and NB
- ( ) WB, SB, and NB

Is the Mainline Oriented North/South? Enter Yes or No

- (●) Yes
- ( ) No

K Factors	Mainline
	9.00%
	Side street
	9.00%

D Factors	*Mainline*
Northbound (NB)	41.0%
Southbound (SB)	59.0%
	Side street
Westbound (WB)	39.0%
Eastbound (EB)	61.0%

Do you have FTSUTMS Model Year traffic from which you would like to interpolate/extrapolate for project years? (Y/N)

Enter Yes or No

- (●) Yes
- ( ) No

If "Yes" go to cell C47 — If "No" go to cell C31

Enter Year and Growth Rates from Base Year:

	Year	*Rate* (1.0% = 0.01) Mainline	Side Street
Base	2015	0.00%	0.00%
Opening	2025		
Mid	2035		
Design	2045		

Mainline Growth Function

- (●) Linear
- ( ) Exponential
- ( ) Decaying

Side Street Growth Function

- (●) Linear
- ( ) Exponential
- ( ) Decaying

Enter Base Year AADTs for Volume Comparison:

(growth rates are used to calculate other project years)

From West: EB Approach	*From East: WB Approach*	*From North: SB Approach*	*From South: NB Approach*	***TOTAL***
0	0	0	0	0

Enter Project and Model Years

	Year
Base	2015
Opening	2020
Mid	2025
Design	2030
Model	2030

Enter Base and Model Year AADTs for Volume Comparison:

(volumes for other project years are calculated by interpolation)

	From West: EB Approach	*From East: WB Approach*	*From North: SB Approach*	*From South: NB Approach*	***TOTAL***
2015	788	133	4000	3900	8821
2030	1000	170	7100	7100	15370

First Guess Turning % Option Used
Existing Turning Movement Counts

		1st Guess Turning %'s for AADT Balancing	**Actual/Counted Traffic for 2015**
(EB LT)	*West-to-North*	63.3%	31
(EB THRU)	*West-to-East*	0.0%	0
(EB RT)	*West-to-South*	36.7%	18
(WB LT)	*East-to-South*	66.7%	4
(WB THRU)	*East-to-West*	0.0%	0
(WB RT)	*East-to-North*	33.3%	2
(SB LT)	*North-to-East*	2.1%	5
(SB THRU)	*North-to-South*	90.3%	215
(SB RT)	*North-to-West*	7.6%	18
(NB LT)	*South-to-West*	2.5%	2
(NB THRU)	*South-to-North*	96.2%	77
(NB RT)	*South-to-East*	1.3%	1

Desired Closure: 1.00

Existing Year AADTs

Only the existing year total departure volumes [AADT*K*(1-D)] will be used to calculate the turning percentages first guess.

Existing Turning Movement Counts

The turning percentages first guess is the same as the ***actual distribution of turning volumes entered***. No balancing technique is used.

FSUTMS Model Year AADTs

Only the FSUTMS model year departure volumes [AADT*K*(1-D)] will be used to calculate the turning percentages first guess.

PROJECT TRAFFIC FOR Belle Terre Blvd AT Kaywood Pl/Kankakee Tr- AM

DESIGN HOUR TURNING MOVEMENTS IN YEAR 2015

Belle Terre Blvd

(4000)

212

10.7% 23 | 87.7% 186 | 1.6% 3

Kaywood Pl/Kankakee Tr- AM

2 31.1%
0 0.0% 5 (130)
3 68.9%

60.9% 26
(790) 43 0.0% 0
39.1% 17

Kaywood Pl/Kankakee Tr- AM

6 3.9% | 134 93.5% | 4 2.6%

144

(3900)

Belle Terre Blvd

(XXXXX)	2015 AADT
XXXX	2015 DDHV
K ML =	9.00%
K SS =	9.00%

D Factors
41.0% NB
59.0% SB
39.0% WB
61.0% EB

DESIGN HOUR TURNING MOVEMENTS IN YEAR 2020

Belle Terre Blvd

(5000)

267

9.0% 24 | 89.6% 239 | 1.4% 4

Kaywood Pl/Kankakee Tr- AM

2 30.9%
0 0.0% 5 (150)
3 69.1%

60.7% 29
(860) 47 0.0% 0
39.3% 18

Kaywood Pl/Kankakee Tr- AM

6 3.3% | 173 94.4% | 4 2.3%

183

(5000)

Belle Terre Blvd

(XXXXX)	2020 AADT
XXXX	2020 DDHV
K ML =	9.00%
K SS =	9.00%

D Factors
41.0% NB
59.0% SB
39.0% WB
61.0% EB

DESIGN HOUR TURNING MOVEMENTS IN YEAR 2025

Belle Terre Blvd

(6100)

322

8.2% 26 | 90.5% 292 | 1.3% 4

Kaywood Pl/Kankakee Tr- AM

2 30.8%
0 0.0% 6 (160)
4 69.2%

60.6% 31
(930) 51 0.0% 0
39.4% 20

Kaywood Pl/Kankakee Tr- AM

7 3.0% | 211 94.8% | 5 2.2%

223

(6000)

Belle Terre Blvd

(XXXXX)	2025 AADT
XXXX	2025 DDHV
K ML =	9.00%
K SS =	9.00%

D Factors
41.0% NB
59.0% SB
39.0% WB
61.0% EB

DESIGN HOUR TURNING MOVEMENTS IN YEAR 2030

Belle Terre Blvd

(7100)

377

7.4% 28 | 91.5% 345 | 1.1% 4

Kaywood Pl/Kankakee Tr- AM

2 30.8%
0 0.0% 6 (170)
4 69.2%

60.5% 33
(1000) 55 0.0% 0
39.5% 22

Kaywood Pl/Kankakee Tr- AM

7 2.7% | 250 95.5% | 5 1.8%

262

(7100)

Belle Terre Blvd

(XXXXX)	2030 AADT
XXXX	2030 DDHV
K ML =	9.00%
K SS =	9.00%

D Factors
41.0% NB
59.0% SB
39.0% WB
61.0% EB

PROJECT TRAFFIC FOR Belle Terre Blvd AT Kaywood Pl/Kankakee Tr- AM

2015 INPUT TMCs COMPARED TO 2015 DHV

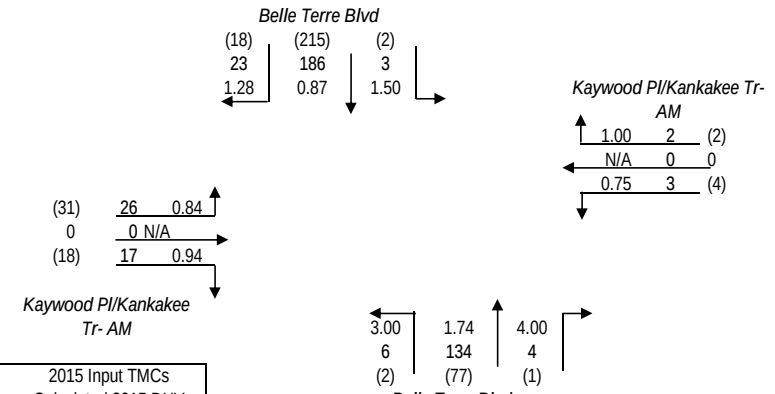

(XXX)	2015 Input TMCs
XXX	Calculated 2015 DHV
X.XX	Ratio

2015 INPUT TMCs COMPARED TO 2020 DHV

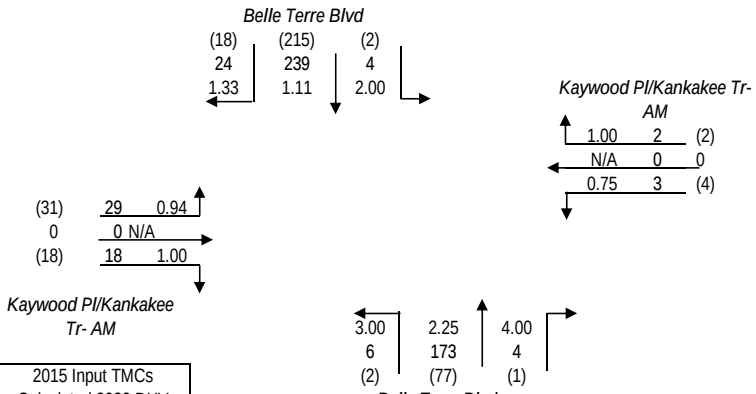

(XXX)	2015 Input TMCs
XXX	Calculated 2020 DHV
X.XX	Ratio

2015 INPUT TMCs COMPARED TO 2025 DHV

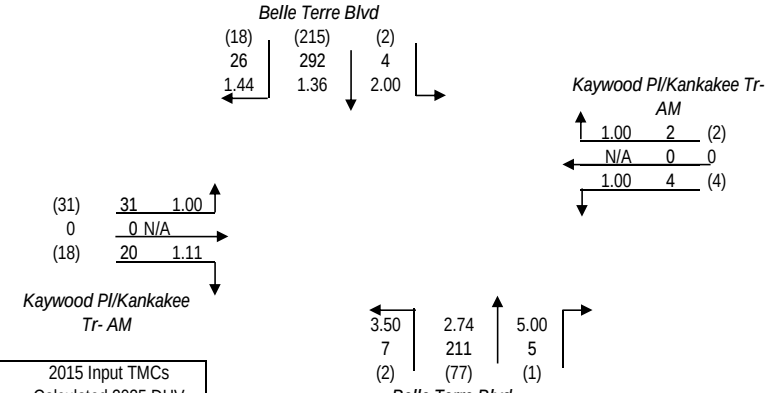

(XXX)	2015 Input TMCs
XXX	Calculated 2025 DHV
X.XX	Ratio

2015 INPUT TMCs COMPARED TO 2030 DHV

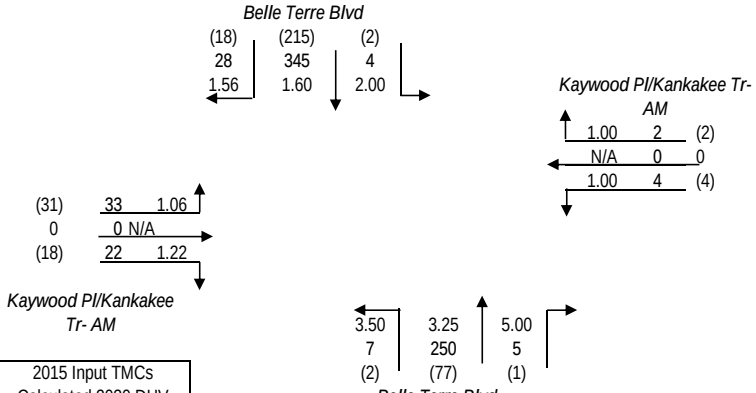

(XXX)	2015 Input TMCs
XXX	Calculated 2030 DHV
X.XX	Ratio

TURNS5 ANALYSIS SHEET - INPUT

Analyst:	-
Date:	12-Nov-15
Highway:	Belle Terre Blvd
Intersection:	Kathleen Tr (S)- AM
Project:	Belle Terre Blvd/Pkwy Intersection Analysis
County:	Flagler

Is this a 4 way intersection?

- ○ Yes, my intersection has four approaches

If not, which 3 approaches exist in the intersection?

- ○ EB, WB, and SB
- ○ EB, WB, and NB
- ○ EB, SB, and NB
- ◉ WB, SB, and NB

Is the Mainline Oriented North/South? (Enter Yes or No)

- ◉ Yes
- ○ No

K Factors	
Mainline	9.00%
Side street	9.00%

D Factors	*Mainline*
Northbound (NB)	41.0%
Southbound (SB)	59.0%
	Side street
Westbound (WB)	61.0%
Eastbound (EB)	0.0%

Do you have FTSUTMS Model Year traffic from which you would like to interpolate/extrapolate for project years? (Y/N) (Enter Yes or No)

- ◉ Yes
- ○ No

If "Yes" go to cell C47 If "No" go to cell C31

Enter Year and Growth Rates from Base Year:

	Year	*Rate* (1.0% = 0.01) Mainline	Side Street
Base	2015	0.00%	0.00%
Opening	2025		
Mid	2035		
Design	2045		

Mainline Growth Function

- ◉ Linear
- ○ Exponential
- ○ Decaying

Side Street Growth Function

- ◉ Linear
- ○ Exponential
- ○ Decaying

Enter Base Year AADTs for Volume Comparison:
(growth rates are used to calculate other project years)

From West: EB Approach	*From East: WB Approach*	*From North: SB Approach*	*From South: NB Approach*	***TOTAL***
0	0	0	0	0

Enter Project and Model Years

	Year
Base	2015
Opening	2020
Mid	2025
Design	2030
Model	2030

Enter Base and Model Year AADTs for Volume Comparison:
(volumes for other project years are calculated by interpolation)

	From West: EB Approach	*From East: WB Approach*	*From North: SB Approach*	*From South: NB Approach*	***TOTAL***
2015	0	233	4200	4000	8433
2030	0	300	7500	7100	14900

		1st Guess Turning %'s for AADT Balancing	**Actual/Counted Traffic for 2015**
(EB LT)	*West-to-North*	0.0%	0
(EB THRU)	*West-to-East*	0.0%	0
(EB RT)	*West-to-South*	0.0%	0
(WB LT)	*East-to-South*	47.4%	9
(WB THRU)	*East-to-West*	0.0%	0
(WB RT)	*East-to-North*	52.6%	10
(SB LT)	*North-to-East*	0.4%	1
(SB THRU)	*North-to-South*	99.6%	229
(SB RT)	*North-to-West*	0.0%	0
(NB LT)	*South-to-West*	0.0%	0
(NB THRU)	*South-to-North*	99.1%	109
(NB RT)	*South-to-East*	0.9%	1

Desired Closure: 1.00

Existing Year AADTs

Existing Turning Movement Counts

FSUTMS Model Year AADTs

First Guess Turning % Option Used
Existing Turning Movement Counts

Only the existing year total departure volumes [AADT*K*(1-D)] will be used to calculate the turning percentages first guess.

The turning percentages first guess is the same as the ***actual distribution of turning volumes entered***. No balancing technique is used.

Only the FSUTMS model year departure volumes [AADT*K*(1-D)] will be used to calculate the turning percentages first guess.

PROJECT TRAFFIC FOR Belle Terre Blvd AT Kathleen Tr (S)- AM

DESIGN HOUR TURNING MOVEMENTS IN YEAR 2015

Belle Terre Blvd
(4200)
223
0.0% 0 | 98.5% 220 | 1.5% 3

Kathleen Tr (S)- AM
7 54.7%
0 0.0% 13 (230)
6 45.3%

0.0% 0
0 0 0.0% 0
0.0% 0

Kathleen Tr (S)- AM

0 | 0.0% | 143 96.9% | 5 3.1%
148
(4000)
Belle Terre Blvd

(XXXXX)	2015 AADT
XXXX	2015 DDHV
K ML =	9.00%
K SS =	9.00%

D Factors
41.0% NB
59.0% SB
61.0% WB

DESIGN HOUR TURNING MOVEMENTS IN YEAR 2020

Belle Terre Blvd
(5300)
281
0.0% 0 | 98.7% 277 | 1.3% 4

Kathleen Tr (S)- AM
8 54.9%
0 0.0% 14 (260)
6 45.1%

0.0% 0
0 0 0.0% 0
0.0% 0

Kathleen Tr (S)- AM

0 | 0.0% | 181 97.3% | 5 2.7%
186
(5000)
Belle Terre Blvd

(XXXXX)	2020 AADT
XXXX	2020 DDHV
K ML =	9.00%
K SS =	9.00%

D Factors
41.0% NB
59.0% SB
61.0% WB

DESIGN HOUR TURNING MOVEMENTS IN YEAR 2025

Belle Terre Blvd
(6400)
340
0.0% 0 | 98.8% 336 | 1.2% 4

Kathleen Tr (S)- AM
8 55.1%
0 0.0% 15 (280)
7 44.9%

0.0% 0
0 0 0.0% 0
0.0% 0

Kathleen Tr (S)- AM

0 | 0.0% | 218 97.5% | 6 2.5%
224
(6100)
Belle Terre Blvd

(XXXXX)	2025 AADT
XXXX	2025 DDHV
K ML =	9.00%
K SS =	9.00%

D Factors
41.0% NB
59.0% SB
61.0% WB

DESIGN HOUR TURNING MOVEMENTS IN YEAR 2030

Belle Terre Blvd
(7500)
398
0.0% 0 | 98.8% 393 | 1.2% 5

Kathleen Tr (S)- AM
9 55.2%
0 0.0% 16 (300)
7 44.8%

0.0% 0
0 0 0.0% 0
0.0% 0

Kathleen Tr (S)- AM

0 | 0.0% | 256 97.7% | 6 2.3%
262
(7100)
Belle Terre Blvd

(XXXXX)	2030 AADT
XXXX	2030 DDHV
K ML =	9.00%
K SS =	9.00%

D Factors
41.0% NB
59.0% SB
61.0% WB

PROJECT TRAFFIC FOR Belle Terre Blvd AT Kathleen Tr (S)- AM

2015 INPUT TMCs COMPARED TO 2015 DHV

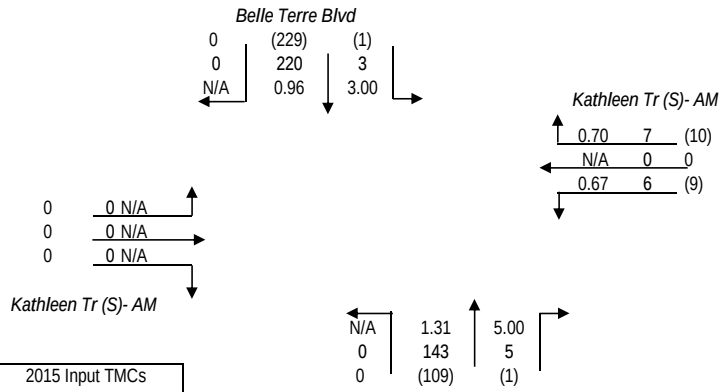

(XXX)	2015 Input TMCs
XXX	Calculated 2015 DHV
X.XX	Ratio

2015 INPUT TMCs COMPARED TO 2020 DHV

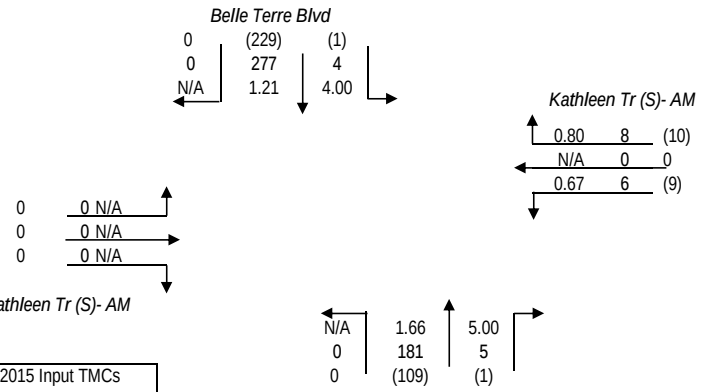

(XXX)	2015 Input TMCs
XXX	Calculated 2020 DHV
X.XX	Ratio

2015 INPUT TMCs COMPARED TO 2025 DHV

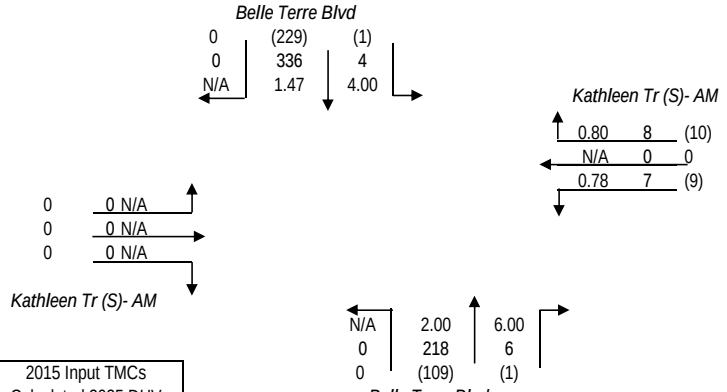

(XXX)	2015 Input TMCs
XXX	Calculated 2025 DHV
X.XX	Ratio

2015 INPUT TMCs COMPARED TO 2030 DHV

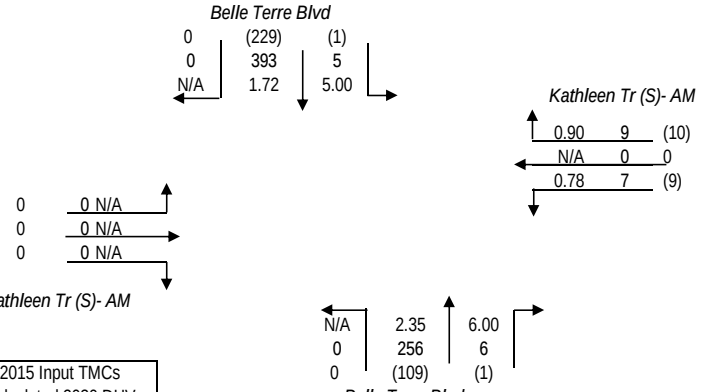

(XXX)	2015 Input TMCs
XXX	Calculated 2030 DHV
X.XX	Ratio

TURNS5 ANALYSIS SHEET - INPUT

Analyst:	-
Date:	12-Nov-15
Highway:	Belle Terre Blvd
Intersection:	Kainite Pl/Kathleen Tr (N)- AM
Project:	Belle Terre Blvd/Pkwy Intersection Analysis
County:	Flagler

Is this a 4 way intersection?

- (●) Yes, my intersection has four approaches

If not, which 3 approaches exist in the intersection?

- ( ) EB, WB, and SB
- ( ) EB, WB, and NB
- ( ) EB, SB, and NB
- ( ) WB, SB, and NB

Is the Mainline Oriented North/South? Enter Yes or No: (●) Yes ( ) No

K Factors	
Mainline	9.00%
Side street	9.00%

D Factors	*Mainline*
Northbound (NB)	41.0%
Southbound (SB)	59.0%
	Side street
Westbound (WB)	61.0%
Eastbound (EB)	39.0%

Do you have FTSUTMS Model Year traffic from which you would like to interpolate/extrapolate for project years? (Y/N) Enter Yes or No: (●) Yes ( ) No

If "Yes" go to cell C47 — If "No" go to cell C31

Enter Year and Growth Rates from Base Year:

	Year	*Rate* (1.0% = 0.01) Mainline	Side Street
Base	2015	0.00%	0.00%
Opening	2025		
Mid	2035		
Design	2045		

Mainline Growth Function: (●) Linear ( ) Exponential ( ) Decaying

Side Street Growth Function: (●) Linear ( ) Exponential ( ) Decaying

Enter Base Year AADTs for Volume Comparison:
(growth rates are used to calculate other project years)

From West: EB Approach	*From East: WB Approach*	*From North: SB Approach*	*From South: NB Approach*	***TOTAL***
0	0	0	0	0

Enter Project and Model Years

	Year
Base	2015
Opening	2020
Mid	2025
Design	2030
Model	2030

Enter Base and Model Year AADTs for Volume Comparison:
(volumes for other project years are calculated by interpolation)

	From West: EB Approach	*From East: WB Approach*	*From North: SB Approach*	*From South: NB Approach*	***TOTAL***
2015	177	288	4500	4200	9165
2030	230	370	8000	7500	16100

First Guess Turning % Option Used
Existing Turning Movement Counts

		1st Guess Turning %'s for AADT Balancing	**Actual/Counted Traffic for 2015**
(EB LT)	*West-to-North*	62.5%	5
(EB THRU)	*West-to-East*	0.0%	0
(EB RT)	*West-to-South*	37.5%	3
(WB LT)	*East-to-South*	50.0%	8
(WB THRU)	*East-to-West*	0.0%	0
(WB RT)	*East-to-North*	50.0%	8
(SB LT)	*North-to-East*	0.9%	2
(SB THRU)	*North-to-South*	99.1%	219
(SB RT)	*North-to-West*	0.0%	0
(NB LT)	*South-to-West*	5.0%	6
(NB THRU)	*South-to-North*	88.3%	105
(NB RT)	*South-to-East*	6.7%	8

Desired Closure: 3.00

Existing Year AADTs — Only the existing year total departure volumes [AADT*K*(1-D)] will be used to calculate the turning percentages first guess.

Existing Turning Movement Counts — The turning percentages first guess is the same as the ***actual distribution of turning volumes entered***. No balancing technique is used.

FSUTMS Model Year AADTs — Only the FSUTMS model year departure volumes [AADT*K*(1-D)] will be used to calculate the turning percentages first guess.

PROJECT TRAFFIC FOR Belle Terre Blvd AT Kainite Pl/Kathleen Tr (N)- AM

DESIGN HOUR TURNING MOVEMENTS IN YEAR 2015

Belle Terre Blvd
(4500)
239
0.0% 0 | 99.2% 237 | 0.8% 2

Kainite Pl/Kathleen Tr (N)- AM
9 55.3%
0 0.0% 16 (290)
7 44.7%

(180) 6
67.4% 4
0.0% 0
32.6% 2

Kainite Pl/Kathleen Tr (N)- AM

9 | 139 | 7
5.7% | 89.5% | 4.8%
155
(4200)
Belle Terre Blvd

(XXXXX)	2015 AADT
XXXX	2015 DDHV
K ML =	9.00%
K SS =	9.00%

D Factors
41.0% NB
59.0% SB
61.0% WB
39.0% EB

DESIGN HOUR TURNING MOVEMENTS IN YEAR 2020

Belle Terre Blvd
(5700)
301
0.0% 0 | 99.3% 299 | 0.7% 2

Kainite Pl/Kathleen Tr (N)- AM
9 55.3%
0 0.0% 17 (320)
8 44.7%

(200) 7
67.4% 5
0.0% 0
32.6% 2

Kainite Pl/Kathleen Tr (N)- AM

10 | 178 | 8
5.0% | 90.8% | 4.2%
196
(5300)
Belle Terre Blvd

(XXXXX)	2020 AADT
XXXX	2020 DDHV
K ML =	9.00%
K SS =	9.00%

D Factors
41.0% NB
59.0% SB
61.0% WB
39.0% EB

DESIGN HOUR TURNING MOVEMENTS IN YEAR 2025

Belle Terre Blvd
(6800)
363
0.0% 0 | 99.4% 361 | 0.6% 2

Kainite Pl/Kathleen Tr (N)- AM
11 55.4%
0 0.0% 19 (340)
8 44.6%

(210) 7
67.4% 5
0.0% 0
32.6% 2

Kainite Pl/Kathleen Tr (N)- AM

11 | 216 | 9
4.6% | 91.6% | 3.8%
236
(6400)
Belle Terre Blvd

(XXXXX)	2025 AADT
XXXX	2025 DDHV
K ML =	9.00%
K SS =	9.00%

D Factors
41.0% NB
59.0% SB
61.0% WB
39.0% EB

DESIGN HOUR TURNING MOVEMENTS IN YEAR 2030

Belle Terre Blvd
(8000)
425
0.0% 0 | 99.4% 422 | 0.6% 3

Kainite Pl/Kathleen Tr (N)- AM
11 55.4%
0 0.0% 20 (370)
9 44.6%

(230) 8
67.4% 5
0.0% 0
32.6% 3

Kainite Pl/Kathleen Tr (N)- AM

12 | 255 | 10
4.2% | 92.3% | 3.5%
277
(7500)
Belle Terre Blvd

(XXXXX)	2030 AADT
XXXX	2030 DDHV
K ML =	9.00%
K SS =	9.00%

D Factors
41.0% NB
59.0% SB
61.0% WB
39.0% EB

PROJECT TRAFFIC FOR Belle Terre Blvd AT Kainite Pl/Kathleen Tr (N)- AM

2015 INPUT TMCs COMPARED TO 2015 DHV

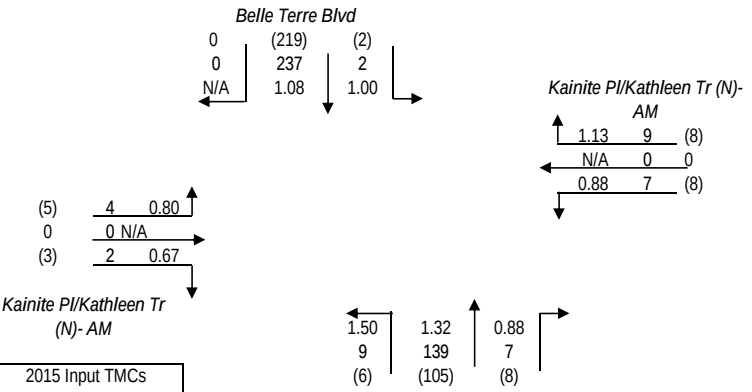

(XXX)	2015 Input TMCs
XXX	Calculated 2015 DHV
X.XX	Ratio

2015 INPUT TMCs COMPARED TO 2020 DHV

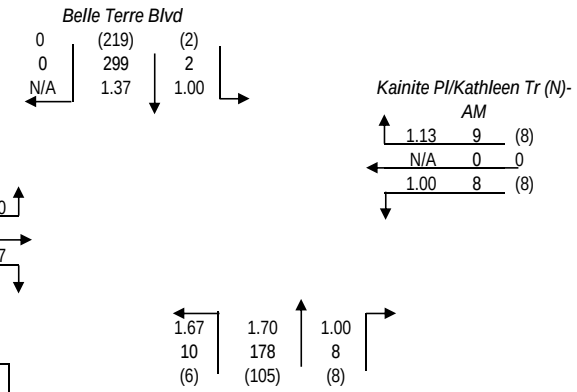

(XXX)	2015 Input TMCs
XXX	Calculated 2020 DHV
X.XX	Ratio

2015 INPUT TMCs COMPARED TO 2025 DHV

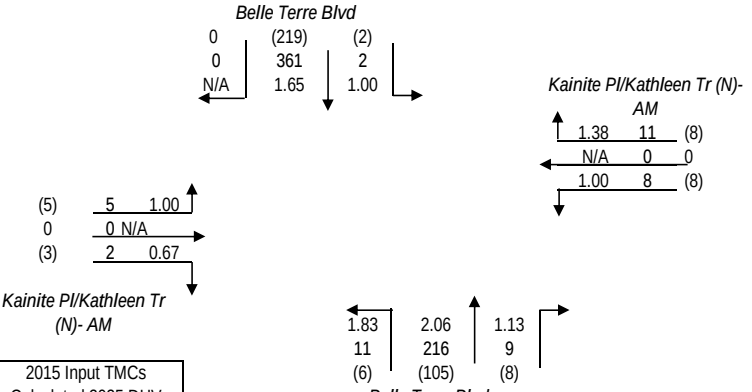

(XXX)	2015 Input TMCs
XXX	Calculated 2025 DHV
X.XX	Ratio

2015 INPUT TMCs COMPARED TO 2030 DHV

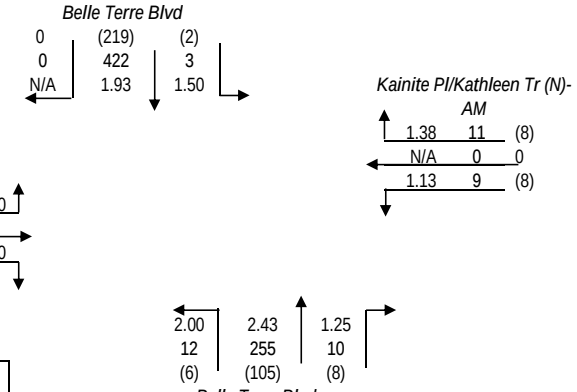

(XXX)	2015 Input TMCs
XXX	Calculated 2030 DHV
X.XX	Ratio

TURNS5 ANALYSIS SHEET - INPUT

Analyst:	-
Date:	12-Nov-15
Highway:	Belle Terre Blvd
Intersection:	Karas Tr- AM
Project:	Belle Terre Blvd/Pkwy Intersection Analysis
County:	Flagler

Is this a 4 way intersection?

- ○ Yes, my intersection has four approaches

If not, which 3 approaches exist in the intersection?

- ○ EB, WB, and SB
- ○ EB, WB, and NB
- ○ EB, SB, and NB
- ◉ WB, SB, and NB

Is the Mainline Oriented North/South? (Enter Yes or No)

- ◉ Yes
- ○ No

K Factors	
Mainline	9.00%
Side street	9.00%

D Factors	*Mainline*
Northbound (NB)	41.0%
Southbound (SB)	59.0%
	Side street
Westbound (WB)	61.0%
Eastbound (EB)	0.0%

Do you have FTSUTMS Model Year traffic from which you would like to interpolate/extrapolate for project years? (Y/N) (Enter Yes or No)

- ◉ Yes
- ○ No

If "Yes" go to cell C47 — If "No" go to cell C31

Enter Year and Growth Rates from Base Year:

	Year	*Rate* (1.0% = 0.01) **Mainline**	**Side Street**
Base	2015	0.00%	0.00%
Opening	2025		
Mid	2035		
Design	2045		

Mainline Growth Function

- ◉ Linear
- ○ Exponential
- ○ Decaying

Side Street Growth Function

- ◉ Linear
- ○ Exponential
- ○ Decaying

Enter Base Year AADTs for Volume Comparison:
(growth rates are used to calculate other project years)

From West: EB Approach	*From East: WB Approach*	*From North: SB Approach*	*From South: NB Approach*	***TOTAL***
0	0	0	0	0

Enter Project and Model Years

	Year
Base	2015
Opening	2020
Mid	2025
Design	2030
Model	2030

Enter Base and Model Year AADTs for Volume Comparison:
(volumes for other project years are calculated by interpolation)

	From West: EB Approach	*From East: WB Approach*	*From North: SB Approach*	*From South: NB Approach*	***TOTAL***
2015	0	633	5000	4500	10133
2030	0	810	8500	8000	17310

First Guess Turning % Option Used
Existing Turning Movement Counts

		1st Guess Turning %'s for AADT Balancing	**Actual/Counted Traffic for 2015**
(EB LT)	*West-to-North*	0.0%	0
(EB THRU)	*West-to-East*	0.0%	0
(EB RT)	*West-to-South*	0.0%	0
(WB LT)	*East-to-South*	21.9%	7
(WB THRU)	*East-to-West*	0.0%	0
(WB RT)	*East-to-North*	78.1%	25
(SB LT)	*North-to-East*	5.3%	12
(SB THRU)	*North-to-South*	94.7%	214
(SB RT)	*North-to-West*	0.0%	0
(NB LT)	*South-to-West*	0.0%	0
(NB THRU)	*South-to-North*	92.4%	109
(NB RT)	*South-to-East*	7.6%	9

Desired Closure: 1.00

Existing Year AADTs

Only the existing year total departure volumes [AADT*K*(1-D)] will be used to calculate the turning percentages first guess.

Existing Turning Movement Counts

The turning percentages first guess is the same as the ***actual distribution of turning volumes entered***. No balancing technique is used.

FSUTMS Model Year AADTs

Only the FSUTMS model year departure volumes [AADT*K*(1-D)] will be used to calculate the turning percentages first guess.

PROJECT TRAFFIC FOR Belle Terre Blvd AT Karas Tr- AM

DESIGN HOUR TURNING MOVEMENTS IN YEAR 2015

Belle Terre Blvd
(5000)
266
0.0% 95.2% 4.8%
0 253 13

Karas Tr- AM
28 79.9%
0 0.0% 35 (630)
7 20.1%

0.0% 0
0 0 0.0% 0
0.0% 0

Karas Tr- AM

0 156 10
0.0% 93.8% 6.2%
166
(4500)
Belle Terre Blvd

(XXXXX)	2015 AADT
XXXX	2015 DDHV
K ML =	9.00%
K SS =	9.00%

D Factors
41.0% NB
59.0% SB
61.0% WB

DESIGN HOUR TURNING MOVEMENTS IN YEAR 2020

Belle Terre Blvd
(6200)
327
0.0% 95.9% 4.1%
0 314 13

Karas Tr- AM
30 79.5%
0 0.0% 38 (690)
8 20.5%

0.0% 0
0 0 0.0% 0
0.0% 0

Karas Tr- AM

0 198 11
0.0% 94.5% 5.5%
209
(5700)
Belle Terre Blvd

(XXXXX)	2020 AADT
XXXX	2020 DDHV
K ML =	9.00%
K SS =	9.00%

D Factors
41.0% NB
59.0% SB
61.0% WB

DESIGN HOUR TURNING MOVEMENTS IN YEAR 2025

Belle Terre Blvd
(7300)
389
0.0% 96.3% 3.7%
0 375 14

Karas Tr- AM
32 79.1%
0 0.0% 41 (750)
9 20.9%

0.0% 0
0 0 0.0% 0
0.0% 0

Karas Tr- AM

0 239 13
0.0% 95.0% 5.0%
252
(6800)
Belle Terre Blvd

(XXXXX)	2025 AADT
XXXX	2025 DDHV
K ML =	9.00%
K SS =	9.00%

D Factors
41.0% NB
59.0% SB
61.0% WB

DESIGN HOUR TURNING MOVEMENTS IN YEAR 2030

Belle Terre Blvd
(8500)
451
0.0% 96.6% 3.4%
0 436 15

Karas Tr- AM
35 78.9%
0 0.0% 44 (810)
9 21.1%

0.0% 0
0 0 0.0% 0
0.0% 0

Karas Tr- AM

0 281 14
0.0% 95.3% 4.7%
295
(8000)
Belle Terre Blvd

(XXXXX)	2030 AADT
XXXX	2030 DDHV
K ML =	9.00%
K SS =	9.00%

D Factors
41.0% NB
59.0% SB
61.0% WB

PROJECT TRAFFIC FOR Belle Terre Blvd AT Karas Tr- AM

2015 INPUT TMCs COMPARED TO 2015 DHV

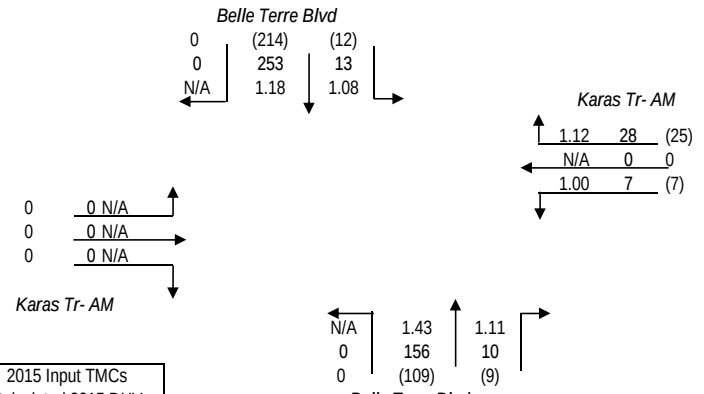

(XXX)	2015 Input TMCs
XXX	Calculated 2015 DHV
X.XX	Ratio

2015 INPUT TMCs COMPARED TO 2020 DHV

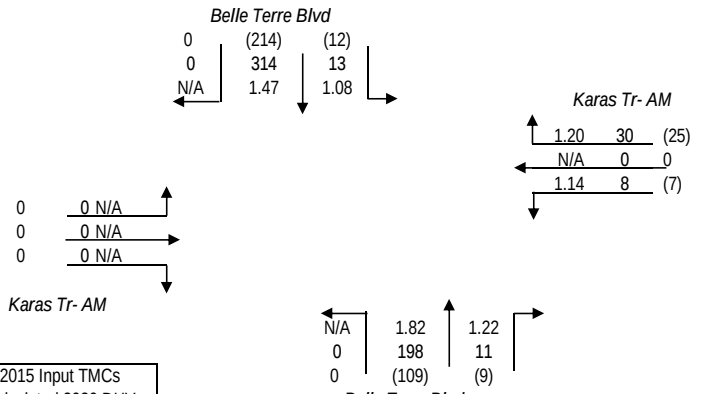

(XXX)	2015 Input TMCs
XXX	Calculated 2020 DHV
X.XX	Ratio

2015 INPUT TMCs COMPARED TO 2025 DHV

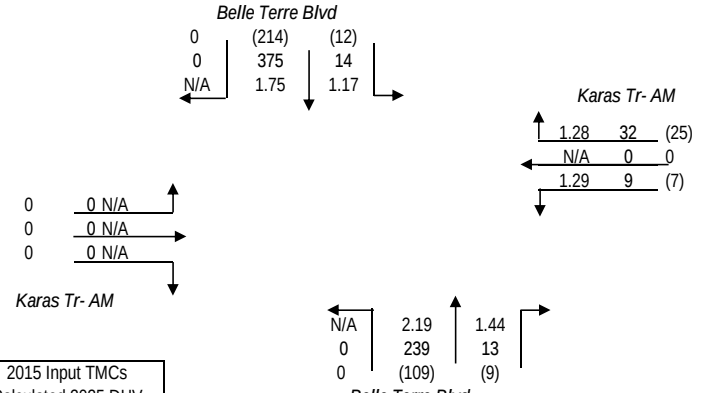

(XXX)	2015 Input TMCs
XXX	Calculated 2025 DHV
X.XX	Ratio

2015 INPUT TMCs COMPARED TO 2030 DHV

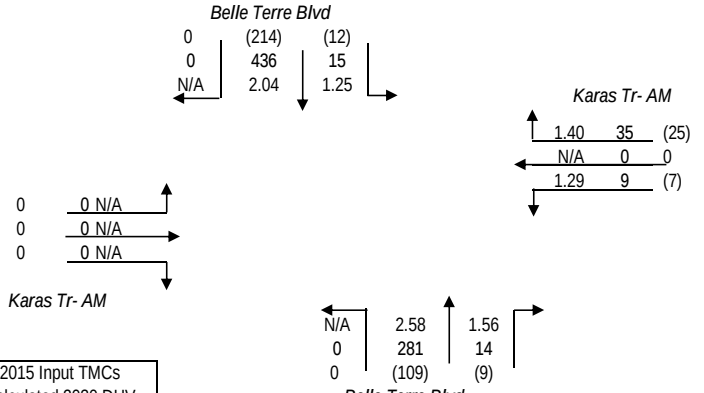

(XXX)	2015 Input TMCs
XXX	Calculated 2030 DHV
X.XX	Ratio

TURNS5 ANALYSIS SHEET - INPUT

Analyst:	-
Date:	12-Nov-15
Highway:	Belle Terre Blvd
Intersection:	Citation Blvd- AM
Project:	Belle Terre Blvd/Pkwy Intersection Analysis
County:	Flagler

Is this a 4 way intersection?

- ○ Yes, my intersection has four approaches

If not, which 3 approaches exist in the intersection?

- ○ EB, WB, and SB
- ○ EB, WB, and NB
- ○ EB, SB, and NB
- ◉ WB, SB, and NB

Is the Mainline Oriented North/South? (Enter Yes or No)

- ◉ Yes
- ○ No

K Factors	
Mainline	9.00%
Side street	9.00%

D Factors	*Mainline*
Northbound (NB)	59.0%
Southbound (SB)	41.0%
	Side street
Westbound (WB)	61.0%
Eastbound (EB)	0.0%

Do you have FTSUTMS Model Year traffic from which you would like to interpolate/extrapolate for project years? (Y/N) (Enter Yes or No)

- ◉ Yes
- ○ No

If "Yes" go to cell C47 — If "No" go to cell C31

Enter Year and Growth Rates from Base Year:

	Year	*Rate* (1.0% = 0.01) Mainline	Side Street
Base	2015	0.00%	0.00%
Opening	2025		
Mid	2035		
Design	2045		

Mainline Growth Function
- ◉ Linear
- ○ Exponential
- ○ Decaying

Side Street Growth Function
- ◉ Linear
- ○ Exponential
- ○ Decaying

Enter Base Year AADTs for Volume Comparison:
(growth rates are used to calculate other project years)

From West: EB Approach	*From East: WB Approach*	*From North: SB Approach*	*From South: NB Approach*	***TOTAL***
0	0	0	0	0

Enter Project and Model Years

	Year
Base	2015
Opening	2020
Mid	2025
Design	2030
Model	2030

Enter Base and Model Year AADTs for Volume Comparison:
(volumes for other project years are calculated by interpolation)

	From West: EB Approach	*From East: WB Approach*	*From North: SB Approach*	*From South: NB Approach*	***TOTAL***
2015	0	400	5500	5000	10900
2030	0	510	9500	8500	18510

		1st Guess Turning %'s for AADT Balancing	**Actual/Counted Traffic for 2015**
(EB LT)	*West-to-North*	0.0%	0
(EB THRU)	*West-to-East*	0.0%	0
(EB RT)	*West-to-South*	0.0%	0
(WB LT)	*East-to-South*	75.7%	28
(WB THRU)	*East-to-West*	0.0%	0
(WB RT)	*East-to-North*	24.3%	9
(SB LT)	*North-to-East*	1.9%	4
(SB THRU)	*North-to-South*	98.1%	205
(SB RT)	*North-to-West*	0.0%	0
(NB LT)	*South-to-West*	0.0%	0
(NB THRU)	*South-to-North*	93.9%	123
(NB RT)	*South-to-East*	6.1%	8

Desired Closure: 3.00

Existing Year AADTs

Existing Turning Movement Counts

FSUTMS Model Year AADTs

First Guess Turning % Option Used
Existing Turning Movement Counts

Only the existing year total departure volumes [AADT*K*(1-D)] will be used to calculate the turning percentages first guess.

The turning percentages first guess is the same as the ***actual distribution of turning volumes entered***. No balancing technique is used.

Only the FSUTMS model year departure volumes [AADT*K*(1-D)] will be used to calculate the turning percentages first guess.

PROJECT TRAFFIC FOR Belle Terre Blvd AT Citation Blvd- AM

DESIGN HOUR TURNING MOVEMENTS IN YEAR 2015

Belle Terre Blvd
(5500)
203
0.0% 0 | 98.4% 200 | 1.6% 3

Citation Blvd- AM
7 30.0%
0 0.0% 22 (400)
15 70.0%

0.0% 0
0 0 0.0% 0
0.0% 0

Citation Blvd- AM

0 | 256 | 10
0.0% | 96.2% | 3.8%
266
(5000)
Belle Terre Blvd

(XXXXX)	2015 AADT
XXXX	2015 DDHV
K ML =	9.00%
K SS =	9.00%

D Factors
59.0% NB
41.0% SB
61.0% WB

DESIGN HOUR TURNING MOVEMENTS IN YEAR 2020

Belle Terre Blvd
(6800)
252
0.0% 0 | 98.7% 249 | 1.3% 3

Citation Blvd- AM
7 30.2%
0 0.0% 24 (440)
17 69.8%

0.0% 0
0 0 0.0% 0
0.0% 0

Citation Blvd- AM

0 | 316 | 11
0.0% | 96.7% | 3.3%
327
(6200)
Belle Terre Blvd

(XXXXX)	2020 AADT
XXXX	2020 DDHV
K ML =	9.00%
K SS =	9.00%

D Factors
59.0% NB
41.0% SB
61.0% WB

DESIGN HOUR TURNING MOVEMENTS IN YEAR 2025

Belle Terre Blvd
(8200)
301
0.0% 0 | 98.7% 297 | 1.3% 4

Citation Blvd- AM
8 30.4%
0 0.0% 26 (470)
18 69.6%

0.0% 0
0 0 0.0% 0
0.0% 0

Citation Blvd- AM

0 | 377 | 12
0.0% | 96.9% | 3.1%
389
(7300)
Belle Terre Blvd

(XXXXX)	2025 AADT
XXXX	2025 DDHV
K ML =	9.00%
K SS =	9.00%

D Factors
59.0% NB
41.0% SB
61.0% WB

DESIGN HOUR TURNING MOVEMENTS IN YEAR 2030

Belle Terre Blvd
(9500)
351
0.0% 0 | 98.8% 347 | 1.2% 4

Citation Blvd- AM
8 30.2%
0 0.0% 28 (510)
20 69.8%

0.0% 0
0 0 0.0% 0
0.0% 0

Citation Blvd- AM

0 | 438 | 13
0.0% | 97.2% | 2.8%
451
(8500)
Belle Terre Blvd

(XXXXX)	2030 AADT
XXXX	2030 DDHV
K ML =	9.00%
K SS =	9.00%

D Factors
59.0% NB
41.0% SB
61.0% WB

PROJECT TRAFFIC FOR Belle Terre Blvd AT Citation Blvd- AM

2015 INPUT TMCs COMPARED TO 2015 DHV

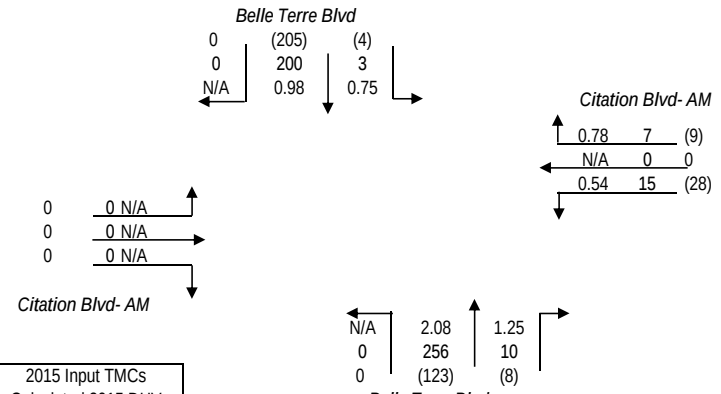

(XXX)	2015 Input TMCs
XXX	Calculated 2015 DHV
X.XX	Ratio

2015 INPUT TMCs COMPARED TO 2020 DHV

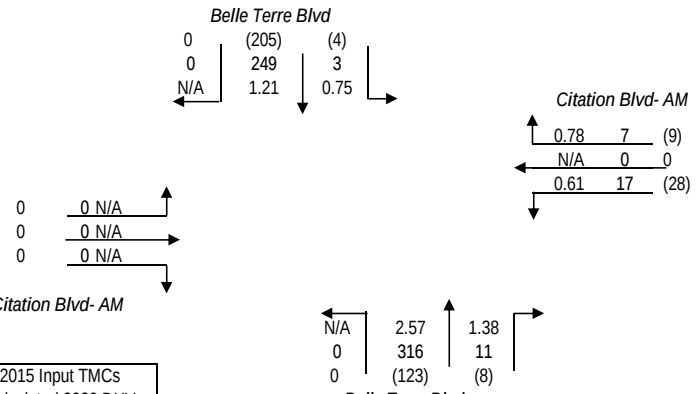

(XXX)	2015 Input TMCs
XXX	Calculated 2020 DHV
X.XX	Ratio

2015 INPUT TMCs COMPARED TO 2025 DHV

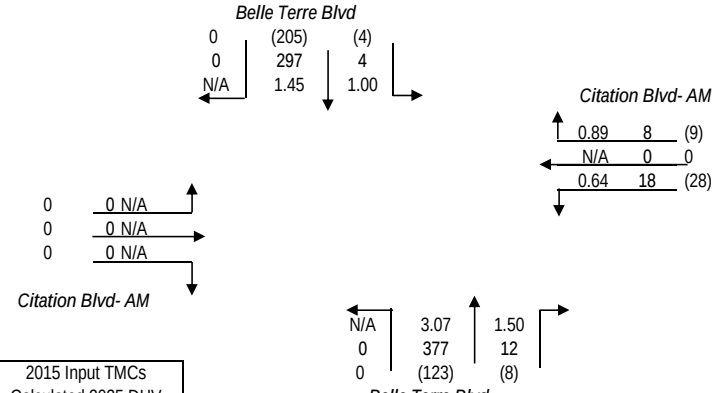

(XXX)	2015 Input TMCs
XXX	Calculated 2025 DHV
X.XX	Ratio

2015 INPUT TMCs COMPARED TO 2030 DHV

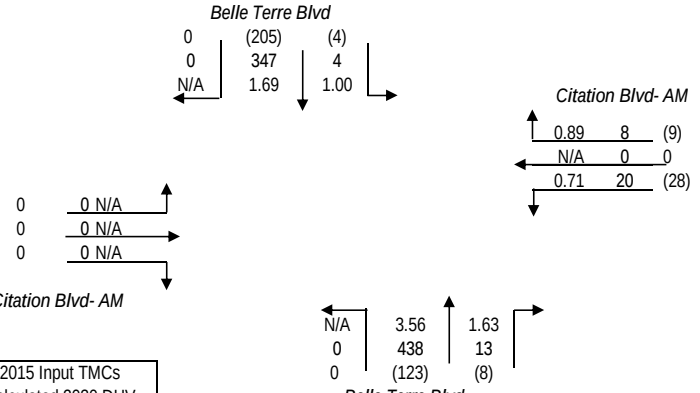

(XXX)	2015 Input TMCs
XXX	Calculated 2030 DHV
X.XX	Ratio

TURNS5 ANALYSIS SHEET - INPUT

Analyst:	-
Date:	12-Nov-15
Highway:	Belle Terre Blvd
Intersection:	Zonal Geranium Tr (S) - AM
Project:	Belle Terre Blvd/Pkwy Intersection Analysis
County:	Flagler

Is this a 4 way intersection?

- ○ Yes, my intersection has four approaches

If not, which 3 approaches exist in the intersection?

- ○ EB, WB, and SB
- ○ EB, WB, and NB
- ◉ EB, SB, and NB
- ○ WB, SB, and NB

Is the Mainline Oriented North/South? (Enter Yes or No)

- ◉ Yes
- ○ No

K Factors	Mainline	**D Factors**	*Mainline*
	9.00%	Northbound (NB)	59.0%
	Side street	Southbound (SB)	41.0%
	9.00%		*Side street*
		Westbound (WB)	0.0%
		Eastbound (EB)	61.0%

Do you have FTSUTMS Model Year traffic from which you would like to interpolate/extrapolate for project years? (Y/N) (Enter Yes or No)

- ◉ Yes
- ○ No

If "Yes" go to cell C47 If "No" go to cell C31

Enter Year and Growth Rates from Base Year:

	Year	*Rate* (1.0% = 0.01) Mainline	Side Street
Base	2015	0.00%	0.00%
Opening	2025		
Mid	2035		
Design	2045		

Mainline Growth Function

- ◉ Linear
- ○ Exponential
- ○ Decaying

Side Street Growth Function

- ◉ Linear
- ○ Exponential
- ○ Decaying

Enter Base Year AADTs for Volume Comparison:
(growth rates are used to calculate other project years)

From West: EB Approach	*From East: WB Approach*	*From North: SB Approach*	*From South: NB Approach*	***TOTAL***
0	0	0	0	0

Enter Project and Model Years

	Year
Base	2015
Opening	2020
Mid	2025
Design	2030
Model	2030

Enter Base and Model Year AADTs for Volume Comparison:
(volumes for other project years are calculated by interpolation)

	From West: EB Approach	*From East: WB Approach*	*From North: SB Approach*	*From South: NB Approach*	***TOTAL***
2015	778	0	5500	5500	11778
2030	1000	0	9500	9500	20000

		1st Guess Turning %'s for AADT Balancing	**Actual/Counted Traffic for 2015**
(EB LT)	*West-to-North*	37.9%	11
(EB THRU)	*West-to-East*	0.0%	0
(EB RT)	*West-to-South*	62.1%	18
(WB LT)	*East-to-South*	0.0%	0
(WB THRU)	*East-to-West*	0.0%	0
(WB RT)	*East-to-North*	0.0%	0
(SB LT)	*North-to-East*	0.0%	0
(SB THRU)	*North-to-South*	96.0%	191
(SB RT)	*North-to-West*	4.0%	8
(NB LT)	*South-to-West*	0.8%	1
(NB THRU)	*South-to-North*	99.2%	131
(NB RT)	*South-to-East*	0.0%	0

Desired Closure: 1.00

First Guess Turning % Option Used
Existing Turning Movement Counts

Existing Year AADTs — Only the existing year total departure volumes [AADT*K*(1-D)] will be used to calculate the turning percentages first guess.

Existing Turning Movement Counts — The turning percentages first guess is the same as the ***actual distribution of turning volumes entered***. No balancing technique is used.

FSUTMS Model Year AADTs — Only the FSUTMS model year departure volumes [AADT*K*(1-D)] will be used to calculate the turning percentages first guess.

PROJECT TRAFFIC FOR Belle Terre Blvd AT Zonal Geranium Tr (S) - AM

DESIGN HOUR TURNING MOVEMENTS IN YEAR 2015

Belle Terre Blvd
(5500)
203

10.6% 22 | 89.4% 181 | 0.0% 0

Zonal Geranium Tr (S) - AM
0 0.0%
0 0.0% 0 0
0 0.0%

(780) 43
38.9% 17
0.0% 0
61.1% 26

Zonal Geranium Tr (S) - AM

6 2.1% | 286 97.9% | 0 0.0%
292
(5500)
Belle Terre Blvd

(XXXXX)	2015 AADT
XXXX	2015 DDHV
K ML =	9.00%
K SS =	9.00%

D Factors
59.0% NB
41.0% SB
61.0% EB

DESIGN HOUR TURNING MOVEMENTS IN YEAR 2020

Belle Terre Blvd
(6800)
252

9.5% 24 | 90.5% 228 | 0.0% 0

Zonal Geranium Tr (S) - AM
0 0.0%
0 0.0% 0 0
0 0.0%

(850) 47
38.8% 18
0.0% 0
61.2% 29

Zonal Geranium Tr (S) - AM

7 1.9% | 356 98.1% | 0 0.0%
363
(6800)
Belle Terre Blvd

(XXXXX)	2020 AADT
XXXX	2020 DDHV
K ML =	9.00%
K SS =	9.00%

D Factors
59.0% NB
41.0% SB
61.0% EB

DESIGN HOUR TURNING MOVEMENTS IN YEAR 2025

Belle Terre Blvd
(8200)
301

8.7% 26 | 91.3% 275 | 0.0% 0

Zonal Geranium Tr (S) - AM
0 0.0%
0 0.0% 0 0
0 0.0%

(930) 51
38.5% 20
0.0% 0
61.5% 31

Zonal Geranium Tr (S) - AM

8 1.8% | 426 98.2% | 0 0.0%
434
(8200)
Belle Terre Blvd

(XXXXX)	2025 AADT
XXXX	2025 DDHV
K ML =	9.00%
K SS =	9.00%

D Factors
59.0% NB
41.0% SB
61.0% EB

DESIGN HOUR TURNING MOVEMENTS IN YEAR 2030

Belle Terre Blvd
(9500)
351

7.9% 28 | 92.1% 323 | 0.0% 0

Zonal Geranium Tr (S) - AM
0 0.0%
0 0.0% 0 0
0 0.0%

(1000) 55
38.4% 21
0.0% 0
61.6% 34

Zonal Geranium Tr (S) - AM

8 1.6% | 496 98.4% | 0 0.0%
504
(9500)
Belle Terre Blvd

(XXXXX)	2030 AADT
XXXX	2030 DDHV
K ML =	9.00%
K SS =	9.00%

D Factors
59.0% NB
41.0% SB
61.0% EB

PROJECT TRAFFIC FOR Belle Terre Blvd AT Zonal Geranium Tr (S) - AM

2015 INPUT TMCs COMPARED TO 2015 DHV

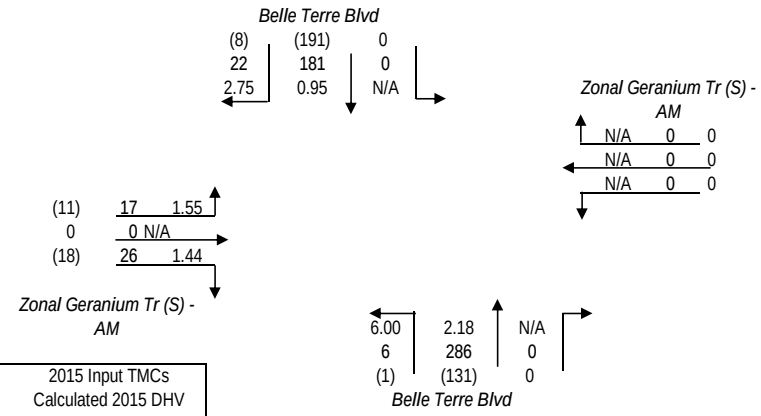

(XXX)	2015 Input TMCs
XXX	Calculated 2015 DHV
X.XX	Ratio

2015 INPUT TMCs COMPARED TO 2020 DHV

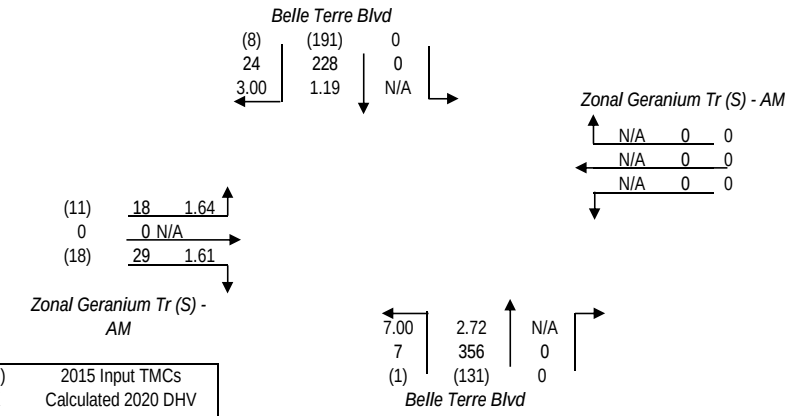

(XXX)	2015 Input TMCs
XXX	Calculated 2020 DHV
X.XX	Ratio

2015 INPUT TMCs COMPARED TO 2025 DHV

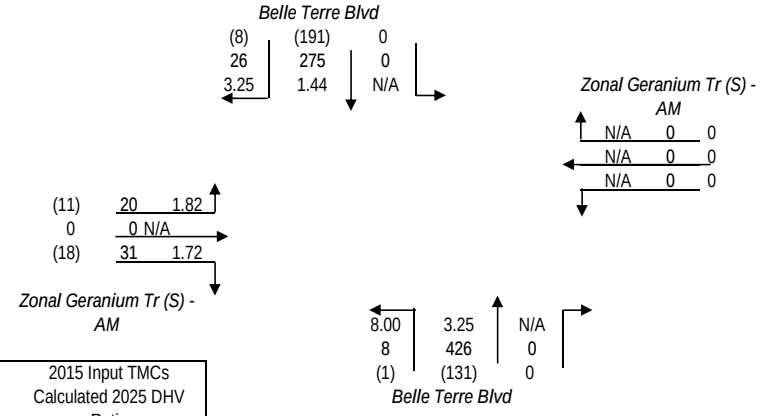

(XXX)	2015 Input TMCs
XXX	Calculated 2025 DHV
X.XX	Ratio

2015 INPUT TMCs COMPARED TO 2030 DHV

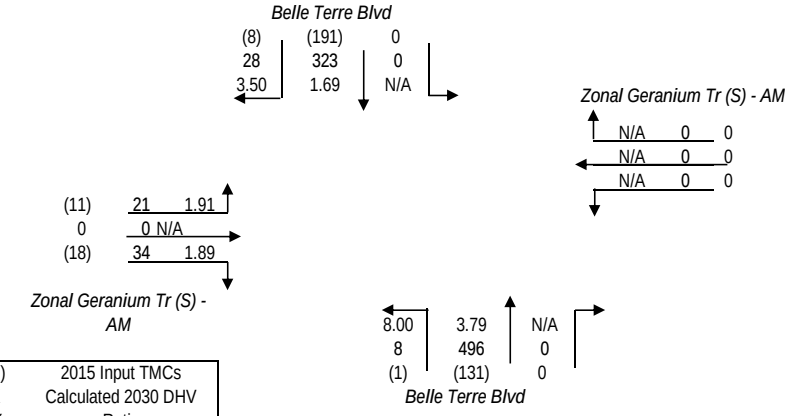

(XXX)	2015 Input TMCs
XXX	Calculated 2030 DHV
X.XX	Ratio

TURNS5 ANALYSIS SHEET - INPUT

Analyst:	-
Date:	12-Nov-15
Highway:	Belle Terre Blvd
Intersection:	Zonal Geranium Tr (N) - AM
Project:	Belle Terre Blvd/Pkwy Intersection Analysis
County:	Flagler

Is this a 4 way intersection?

- ○ Yes, my intersection has four approaches

If not, which 3 approaches exist in the intersection?

- ○ EB, WB, and SB
- ○ EB, WB, and NB
- ◉ EB, SB, and NB
- ○ WB, SB, and NB

Is the Mainline Oriented North/South? (Enter Yes or No)

- ◉ Yes
- ○ No

K Factors	
Mainline	9.00%
Side street	9.00%

D Factors	*Mainline*
Northbound (NB)	59.0%
Southbound (SB)	41.0%
	Side street
Westbound (WB)	0.0%
Eastbound (EB)	61.0%

Do you have FTSUTMS Model Year traffic from which you would like to interpolate/extrapolate for project years? (Y/N) (Enter Yes or No)

- ◉ Yes
- ○ No

If "Yes" go to cell C47 If "No" go to cell C31

Enter Year and Growth Rates from Base Year:

	Year	*Rate* (1.0% = 0.01) Mainline	Side Street
Base	2015	0.00%	0.00%
Opening	2025		
Mid	2035		
Design	2045		

Mainline Growth Function

- ◉ Linear
- ○ Exponential
- ○ Decaying

Side Street Growth Function

- ◉ Linear
- ○ Exponential
- ○ Decaying

Enter Base Year AADTs for Volume Comparison:
(growth rates are used to calculate other project years)

From West: EB Approach	*From East: WB Approach*	*From North: SB Approach*	*From South: NB Approach*	***TOTAL***
0	0	0	0	0

Enter Project and Model Years

	Year
Base	2015
Opening	2020
Mid	2025
Design	2030
Model	2030

Enter Base and Model Year AADTs for Volume Comparison:
(volumes for other project years are calculated by interpolation)

	From West: EB Approach	*From East: WB Approach*	*From North: SB Approach*	*From South: NB Approach*	***TOTAL***
2015	544	0	5500	5500	11544
2030	700	0	9500	9500	19700

First Guess Turning % Option Used
Existing Turning Movement Counts

		1st Guess Turning %'s for AADT Balancing	**Actual/Counted Traffic for 2015**
(EB LT)	*West-to-North*	43.2%	16
(EB THRU)	*West-to-East*	0.0%	0
(EB RT)	*West-to-South*	56.8%	21
(WB LT)	*East-to-South*	0.0%	0
(WB THRU)	*East-to-West*	0.0%	0
(WB RT)	*East-to-North*	0.0%	0
(SB LT)	*North-to-East*	0.0%	0
(SB THRU)	*North-to-South*	97.8%	182
(SB RT)	*North-to-West*	2.2%	4
(NB LT)	*South-to-West*	2.8%	4
(NB THRU)	*South-to-North*	97.2%	138
(NB RT)	*South-to-East*	0.0%	0
Desired Closure:		1.00	

Existing Year AADTs

Only the existing year total departure volumes [AADT*K*(1-D)] will be used to calculate the turning percentages first guess.

Existing Turning Movement Counts

The turning percentages first guess is the same as the ***actual distribution of turning volumes entered***. No balancing technique is used.

FSUTMS Model Year AADTs

Only the FSUTMS model year departure volumes [AADT*K*(1-D)] will be used to calculate the turning percentages first guess.

PROJECT TRAFFIC FOR Belle Terre Blvd AT Zonal Geranium Tr (N) - AM

DESIGN HOUR TURNING MOVEMENTS IN YEAR 2015

Belle Terre Blvd
(5500)
203

3.4% 7 | 96.6% 196 | 0.0% 0

Zonal Geranium Tr (N) - AM
0 0.0%
0 0.0% 0 0
0 0.0%

(540) 30
44.2% 13
0.0% 0
55.8% 17

Zonal Geranium Tr (N) - AM

12 4.1% | 280 95.9% | 0 0.0%

292
(5500)
Belle Terre Blvd

(XXXXX)	2015 AADT
XXXX	2015 DDHV
K ML =	9.00%
K SS =	9.00%

D Factors
59.0% NB
41.0% SB
61.0% EB

DESIGN HOUR TURNING MOVEMENTS IN YEAR 2020

Belle Terre Blvd
(6800)
252

3.0% 8 | 97.0% 244 | 0.0% 0

Zonal Geranium Tr (N) - AM
0 0.0%
0 0.0% 0 0
0 0.0%

(600) 33
44.2% 15
0.0% 0
55.8% 18

Zonal Geranium Tr (N) - AM

13 3.7% | 350 96.3% | 0 0.0%

363
(6800)
Belle Terre Blvd

(XXXXX)	2020 AADT
XXXX	2020 DDHV
K ML =	9.00%
K SS =	9.00%

D Factors
59.0% NB
41.0% SB
61.0% EB

DESIGN HOUR TURNING MOVEMENTS IN YEAR 2025

Belle Terre Blvd
(8200)
301

2.7% 8 | 97.3% 293 | 0.0% 0

Zonal Geranium Tr (N) - AM
0 0.0%
0 0.0% 0 0
0 0.0%

(650) 36
44.0% 16
0.0% 0
56.0% 20

Zonal Geranium Tr (N) - AM

15 3.4% | 419 96.6% | 0 0.0%

434
(8200)
Belle Terre Blvd

(XXXXX)	2025 AADT
XXXX	2025 DDHV
K ML =	9.00%
K SS =	9.00%

D Factors
59.0% NB
41.0% SB
61.0% EB

DESIGN HOUR TURNING MOVEMENTS IN YEAR 2030

Belle Terre Blvd
(9500)
351

2.6% 9 | 97.4% 342 | 0.0% 0

Zonal Geranium Tr (N) - AM
0 0.0%
0 0.0% 0 0
0 0.0%

(700) 38
44.0% 17
0.0% 0
56.0% 21

Zonal Geranium Tr (N) - AM

16 3.2% | 488 96.8% | 0 0.0%

504
(9500)
Belle Terre Blvd

(XXXXX)	2030 AADT
XXXX	2030 DDHV
K ML =	9.00%
K SS =	9.00%

D Factors
59.0% NB
41.0% SB
61.0% EB

PROJECT TRAFFIC FOR Belle Terre Blvd AT Zonal Geranium Tr (N) - AM

2015 INPUT TMCs COMPARED TO 2015 DHV

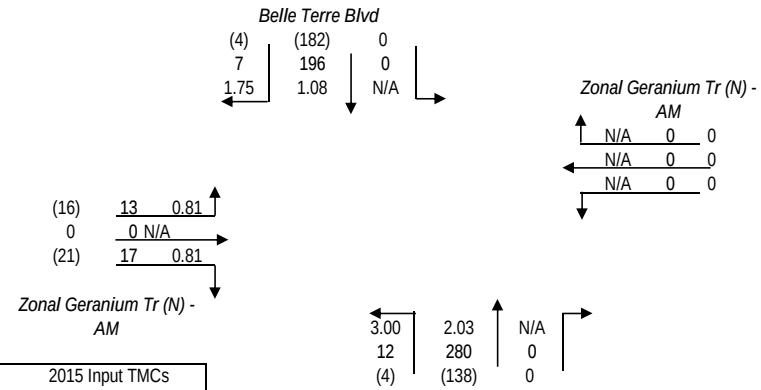

(XXX)	2015 Input TMCs
XXX	Calculated 2015 DHV
X.XX	Ratio

2015 INPUT TMCs COMPARED TO 2020 DHV

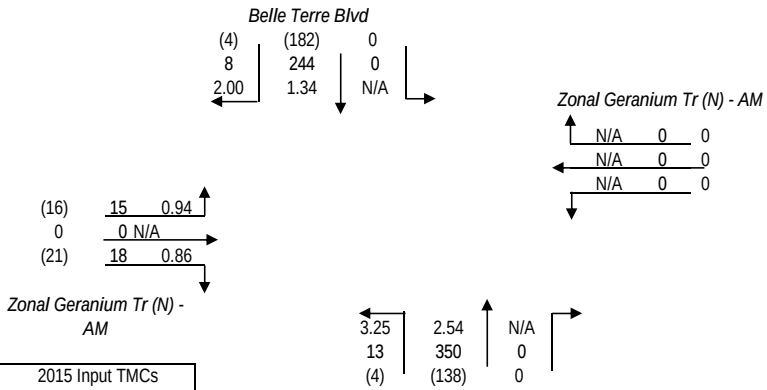

(XXX)	2015 Input TMCs
XXX	Calculated 2020 DHV
X.XX	Ratio

2015 INPUT TMCs COMPARED TO 2025 DHV

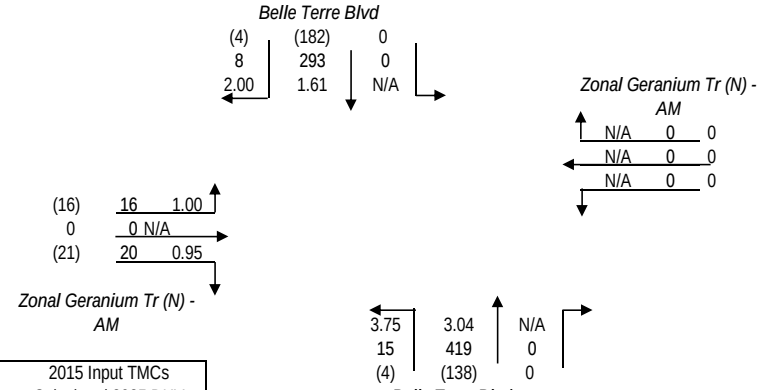

(XXX)	2015 Input TMCs
XXX	Calculated 2025 DHV
X.XX	Ratio

2015 INPUT TMCs COMPARED TO 2030 DHV

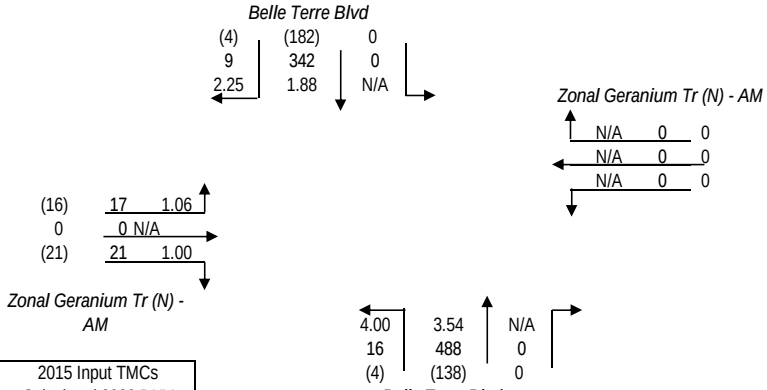

(XXX)	2015 Input TMCs
XXX	Calculated 2030 DHV
X.XX	Ratio

TURNS5 ANALYSIS SHEET - INPUT

Analyst:	-
Date:	12-Nov-15
Highway:	Belle Terre Blvd
Intersection:	Laguna Forest Tr - AM
Project:	Belle Terre Blvd/Pkwy Intersection Analysis
County:	Flagler

Is this a 4 way intersection?

- ○ Yes, my intersection has four approaches

If not, which 3 approaches exist in the intersection?

- ○ EB, WB, and SB
- ○ EB, WB, and NB
- ○ EB, SB, and NB
- ◉ WB, SB, and NB

Is the Mainline Oriented North/South? (Enter Yes or No)

- ◉ Yes
- ○ No

K Factors	
Mainline	9.00%
Side street	9.00%

D Factors	*Mainline*
Northbound (NB)	59.0%
Southbound (SB)	41.0%
	Side street
Westbound (WB)	61.0%
Eastbound (EB)	0.0%

Do you have FTSUTMS Model Year traffic from which you would like to interpolate/extrapolate for project years? (Y/N) (Enter Yes or No)

- ◉ Yes
- ○ No

If "Yes" go to cell C47 If "No" go to cell C31

Enter Year and Growth Rates from Base Year:

	Year	*Rate* (1.0% = 0.01) Mainline	Side Street
Base	2015	0.00%	0.00%
Opening	2025		
Mid	2035		
Design	2045		

Mainline Growth Function

- ◉ Linear
- ○ Exponential
- ○ Decaying

Side Street Growth Function

- ◉ Linear
- ○ Exponential
- ○ Decaying

Enter Base Year AADTs for Volume Comparison:
(growth rates are used to calculate other project years)

From West: EB Approach	*From East: WB Approach*	*From North: SB Approach*	*From South: NB Approach*	***TOTAL***
0	0	0	0	0

Enter Project and Model Years

	Year
Base	2015
Opening	2020
Mid	2025
Design	2030
Model	2030

Enter Base and Model Year AADTs for Volume Comparison:
(volumes for other project years are calculated by interpolation)

	From West: EB Approach	*From East: WB Approach*	*From North: SB Approach*	*From South: NB Approach*	***TOTAL***
2015	0	1167	5500	5500	12167
2030	0	1500	9500	9500	20500

First Guess Turning % Option Used
Existing Turning Movement Counts

		1st Guess Turning %'s for AADT Balancing	**Actual/Counted Traffic for 2015**
(EB LT)	*West-to-North*	0.0%	0
(EB THRU)	*West-to-East*	0.0%	0
(EB RT)	*West-to-South*	0.0%	0
(WB LT)	*East-to-South*	20.0%	16
(WB THRU)	*East-to-West*	0.0%	0
(WB RT)	*East-to-North*	80.0%	64
(SB LT)	*North-to-East*	10.5%	20
(SB THRU)	*North-to-South*	89.5%	170
(SB RT)	*North-to-West*	0.0%	0
(NB LT)	*South-to-West*	0.0%	0
(NB THRU)	*South-to-North*	96.8%	149
(NB RT)	*South-to-East*	3.2%	5

Desired Closure: 1.00

Existing Year AADTs

Only the existing year total departure volumes [AADT*K*(1-D)] will be used to calculate the turning percentages first guess.

Existing Turning Movement Counts

The turning percentages first guess is the same as the ***actual distribution of turning volumes entered***. No balancing technique is used.

FSUTMS Model Year AADTs

Only the FSUTMS model year departure volumes [AADT*K*(1-D)] will be used to calculate the turning percentages first guess.

PROJECT TRAFFIC FOR Belle Terre Blvd AT Laguna Forest Tr - AM

DESIGN HOUR TURNING MOVEMENTS IN YEAR 2015

Belle Terre Blvd
(5500)
203
0.0% 86.8% 13.2%
0 176 27

Laguna Forest Tr - AM
49 77.1%
0 0.0% 64 (1200)
15 22.9%

0.0% 0
0 0 0.0% 0
0.0% 0

Laguna Forest Tr - AM

0 278 14
0.0% 95.2% 4.8%
292
(5500)
Belle Terre Blvd

(XXXXX)	2015 AADT
XXXX	2015 DDHV
K ML =	9.00%
K SS =	9.00%

D Factors
59.0% NB
41.0% SB
61.0% WB

DESIGN HOUR TURNING MOVEMENTS IN YEAR 2020

Belle Terre Blvd
(6800)
252
0.0% 88.3% 11.7%
0 223 29

Laguna Forest Tr - AM
54 77.3%
0 0.0% 70 (1300)
16 22.7%

0.0% 0
0 0 0.0% 0
0.0% 0

Laguna Forest Tr - AM

0 348 15
0.0% 95.8% 4.2%
363
(6800)
Belle Terre Blvd

(XXXXX)	2020 AADT
XXXX	2020 DDHV
K ML =	9.00%
K SS =	9.00%

D Factors
59.0% NB
41.0% SB
61.0% WB

DESIGN HOUR TURNING MOVEMENTS IN YEAR 2025

Belle Terre Blvd
(8200)
301
0.0% 89.3% 10.7%
0 269 32

Laguna Forest Tr - AM
59 77.4%
0 0.0% 76 (1400)
17 22.6%

0.0% 0
0 0 0.0% 0
0.0% 0

Laguna Forest Tr - AM

0 418 16
0.0% 96.2% 3.8%
434
(8200)
Belle Terre Blvd

(XXXXX)	2025 AADT
XXXX	2025 DDHV
K ML =	9.00%
K SS =	9.00%

D Factors
59.0% NB
41.0% SB
61.0% WB

DESIGN HOUR TURNING MOVEMENTS IN YEAR 2030

Belle Terre Blvd
(9500)
351
0.0% 90.3% 9.7%
0 317 34

Laguna Forest Tr - AM
61 75.0%
0 0.0% 82 (1500)
21 25.0%

0.0% 0
0 0 0.0% 0
0.0% 0

Laguna Forest Tr - AM

0 484 20
0.0% 96.1% 3.9%
504
(9500)
Belle Terre Blvd

(XXXXX)	2030 AADT
XXXX	2030 DDHV
K ML =	9.00%
K SS =	9.00%

D Factors
59.0% NB
41.0% SB
61.0% WB

PROJECT TRAFFIC FOR Belle Terre Blvd AT Laguna Forest Tr - AM

2015 INPUT TMCs COMPARED TO 2015 DHV

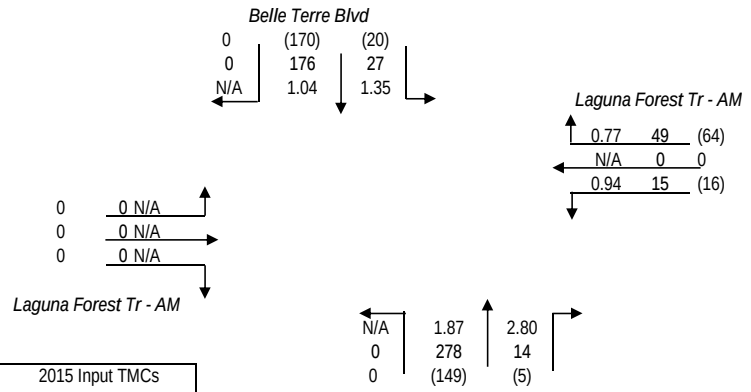

(XXX)	2015 Input TMCs
XXX	Calculated 2015 DHV
X.XX	Ratio

2015 INPUT TMCs COMPARED TO 2020 DHV

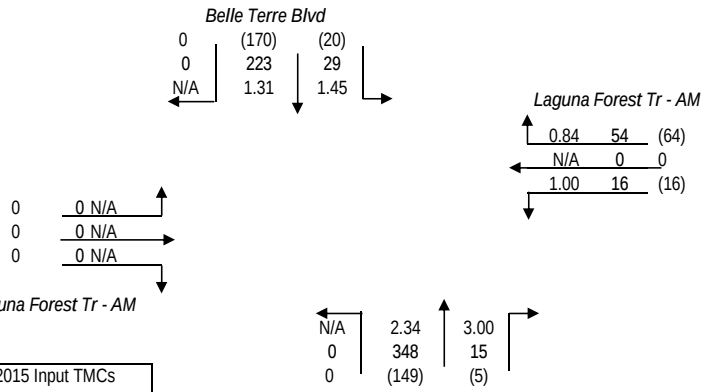

(XXX)	2015 Input TMCs
XXX	Calculated 2020 DHV
X.XX	Ratio

2015 INPUT TMCs COMPARED TO 2025 DHV

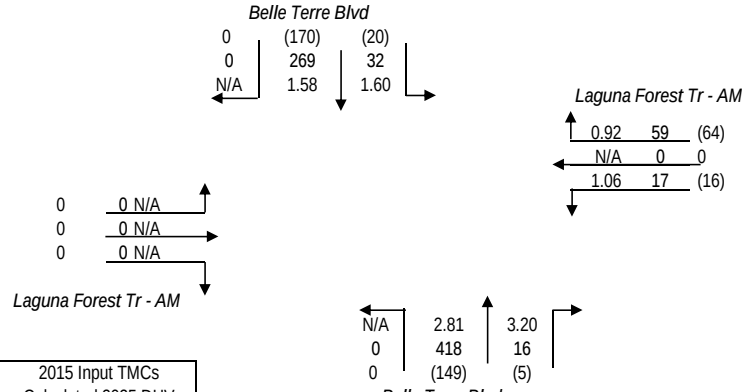

(XXX)	2015 Input TMCs
XXX	Calculated 2025 DHV
X.XX	Ratio

2015 INPUT TMCs COMPARED TO 2030 DHV

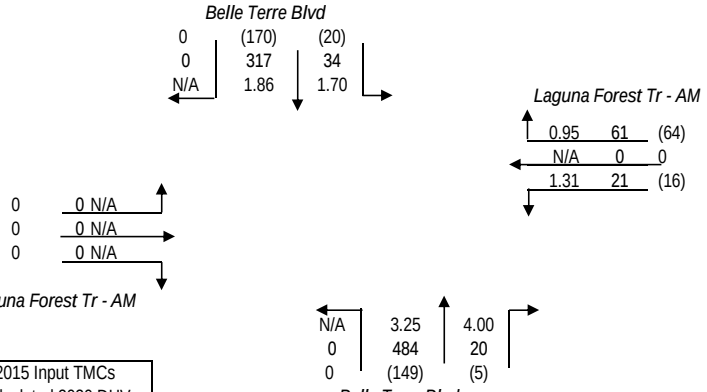

(XXX)	2015 Input TMCs
XXX	Calculated 2030 DHV
X.XX	Ratio

TURNS5 ANALYSIS SHEET - INPUT

Analyst:	-
Date:	12-Nov-15
Highway:	Belle Terre Blvd
Intersection:	Zinnia Tr (S) - AM
Project:	Belle Terre Blvd/Pkwy Intersection Analysis
County:	Flagler

Is this a 4 way intersection?

- ○ Yes, my intersection has four approaches

If not, which 3 approaches exist in the intersection?

- ○ EB, WB, and SB
- ○ EB, WB, and NB
- ◉ EB, SB, and NB
- ○ WB, SB, and NB

Is the Mainline Oriented North/South? Enter Yes or No: ◉ Yes ○ No

K Factors	
Mainline	9.00%
Side street	9.00%

D Factors	*Mainline*
Northbound (NB)	59.0%
Southbound (SB)	41.0%
	Side street
Westbound (WB)	0.0%
Eastbound (EB)	61.0%

Do you have FTSUTMS Model Year traffic from which you would like to interpolate/extrapolate for project years? (Y/N)

Enter Yes or No: ◉ Yes ○ No

If "Yes" go to cell C47 — If "No" go to cell C31

Enter Year and Growth Rates from Base Year:

	Year	*Rate* (1.0% = 0.01) Mainline	Side Street
Base	2015	0.00%	0.00%
Opening	2025		
Mid	2035		
Design	2045		

Mainline Growth Function: ◉ Linear ○ Exponential ○ Decaying

Side Street Growth Function: ◉ Linear ○ Exponential ○ Decaying

Enter Base Year AADTs for Volume Comparison:
(growth rates are used to calculate other project years)

From West: EB Approach	*From East: WB Approach*	*From North: SB Approach*	*From South: NB Approach*	***TOTAL***
0	0	0	0	0

Enter Project and Model Years

	Year
Base	2015
Opening	2020
Mid	2025
Design	2030
Model	2030

Enter Base and Model Year AADTs for Volume Comparison:
(volumes for other project years are calculated by interpolation)

	From West: EB Approach	*From East: WB Approach*	*From North: SB Approach*	*From South: NB Approach*	***TOTAL***
2015	500	0	5500	5500	11500
2030	640	0	9500	9500	19640

		1st Guess Turning %'s for AADT Balancing	**Actual/Counted Traffic for 2015**
(EB LT)	*West-to-North*	77.4%	24
(EB THRU)	*West-to-East*	0.0%	0
(EB RT)	*West-to-South*	22.6%	7
(WB LT)	*East-to-South*	0.0%	0
(WB THRU)	*East-to-West*	0.0%	0
(WB RT)	*East-to-North*	0.0%	0
(SB LT)	*North-to-East*	0.0%	0
(SB THRU)	*North-to-South*	96.3%	183
(SB RT)	*North-to-West*	3.7%	7
(NB LT)	*South-to-West*	0.0%	0
(NB THRU)	*South-to-North*	100.0%	213
(NB RT)	*South-to-East*	0.0%	0

Desired Closure: 1.00

First Guess Turning % Option Used
Existing Turning Movement Counts

Existing Year AADTs — Only the existing year total departure volumes [AADT*K*(1-D)] will be used to calculate the turning percentages first guess.

Existing Turning Movement Counts — The turning percentages first guess is the same as the ***actual distribution of turning volumes entered***. No balancing technique is used.

FSUTMS Model Year AADTs — Only the FSUTMS model year departure volumes [AADT*K*(1-D)] will be used to calculate the turning percentages first guess.

PROJECT TRAFFIC FOR Belle Terre Blvd AT Zinnia Tr (S) - AM

DESIGN HOUR TURNING MOVEMENTS IN YEAR 2015

Belle Terre Blvd
(5500)
203
8.2% 17 | 91.8% 186 | 0.0% 0

Zinnia Tr (S) - AM
0 0.0%
0 0.0% 0 0
0 0.0%

(500) 27
76.0% 21
0.0% 0
24.0% 6

Zinnia Tr (S) - AM

0 | 292 | 0
0.0% | 100.0% | 0.0%
292
(5500)
Belle Terre Blvd

(XXXXX)	2015 AADT
XXXX	2015 DDHV
K ML =	9.00%
K SS =	9.00%

D Factors
59.0% NB
41.0% SB
61.0% EB

DESIGN HOUR TURNING MOVEMENTS IN YEAR 2020

Belle Terre Blvd
(6800)
252
7.1% 18 | 92.9% 234 | 0.0% 0

Zinnia Tr (S) - AM
0 0.0%
0 0.0% 0 0
0 0.0%

(550) 30
76.1% 23
0.0% 0
23.9% 7

Zinnia Tr (S) - AM

0 | 363 | 0
0.0% | 100.0% | 0.0%
363
(6800)
Belle Terre Blvd

(XXXXX)	2020 AADT
XXXX	2020 DDHV
K ML =	9.00%
K SS =	9.00%

D Factors
59.0% NB
41.0% SB
61.0% EB

DESIGN HOUR TURNING MOVEMENTS IN YEAR 2025

Belle Terre Blvd
(8200)
301
6.6% 20 | 93.4% 281 | 0.0% 0

Zinnia Tr (S) - AM
0 0.0%
0 0.0% 0 0
0 0.0%

(590) 33
76.2% 25
0.0% 0
23.8% 8

Zinnia Tr (S) - AM

0 | 434 | 0
0.0% | 100.0% | 0.0%
434
(8200)
Belle Terre Blvd

(XXXXX)	2025 AADT
XXXX	2025 DDHV
K ML =	9.00%
K SS =	9.00%

D Factors
59.0% NB
41.0% SB
61.0% EB

DESIGN HOUR TURNING MOVEMENTS IN YEAR 2030

Belle Terre Blvd
(9500)
351
5.9% 21 | 94.1% 330 | 0.0% 0

Zinnia Tr (S) - AM
0 0.0%
0 0.0% 0 0
0 0.0%

(640) 35
76.2% 27
0.0% 0
23.8% 8

Zinnia Tr (S) - AM

0 | 504 | 0
0.0% | 100.0% | 0.0%
504
(9500)
Belle Terre Blvd

(XXXXX)	2030 AADT
XXXX	2030 DDHV
K ML =	9.00%
K SS =	9.00%

D Factors
59.0% NB
41.0% SB
61.0% EB

PROJECT TRAFFIC FOR Belle Terre Blvd AT Zinnia Tr (S) - AM

2015 INPUT TMCs COMPARED TO 2015 DHV

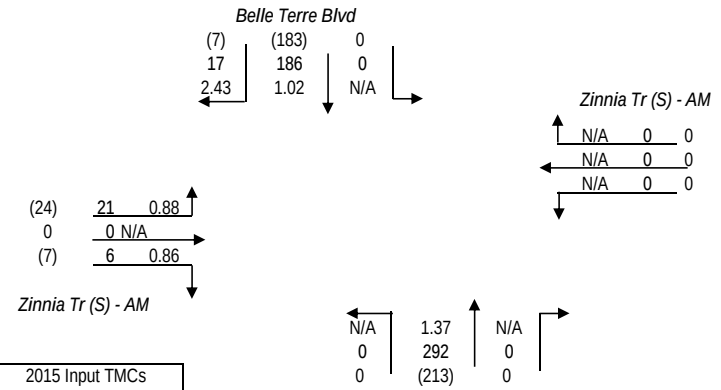

(XXX)	2015 Input TMCs
XXX	Calculated 2015 DHV
X.XX	Ratio

2015 INPUT TMCs COMPARED TO 2020 DHV

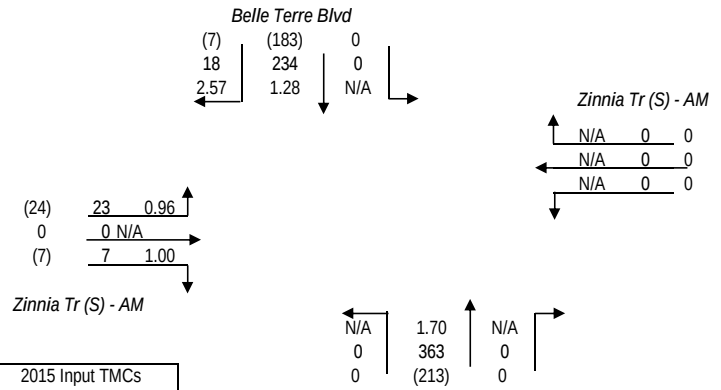

(XXX)	2015 Input TMCs
XXX	Calculated 2020 DHV
X.XX	Ratio

2015 INPUT TMCs COMPARED TO 2025 DHV

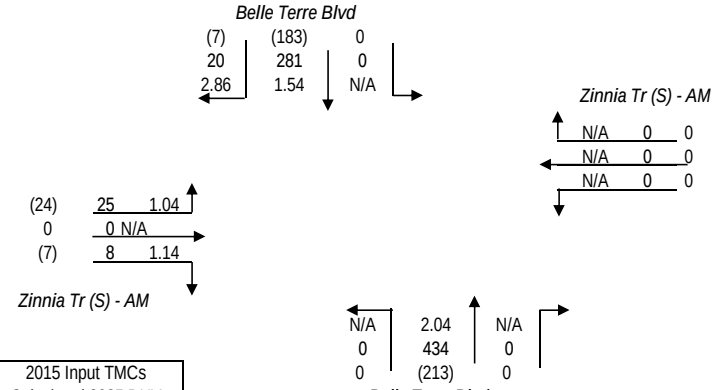

(XXX)	2015 Input TMCs
XXX	Calculated 2025 DHV
X.XX	Ratio

2015 INPUT TMCs COMPARED TO 2030 DHV

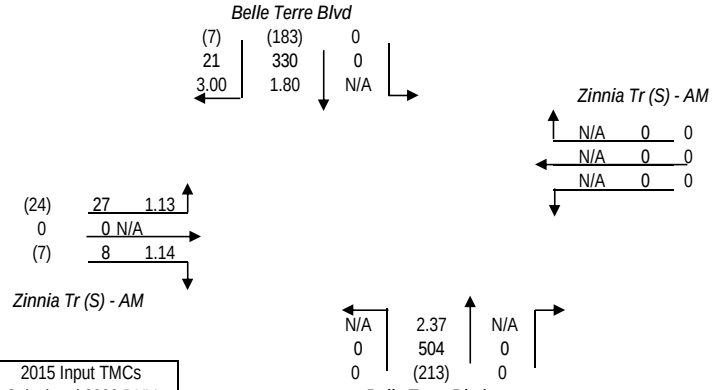

(XXX)	2015 Input TMCs
XXX	Calculated 2030 DHV
X.XX	Ratio

TURNS5 ANALYSIS SHEET - INPUT

Analyst:	-
Date:	12-Nov-15
Highway:	Belle Terre Blvd
Intersection:	Zinnia Tr (N) - AM
Project:	Belle Terre Blvd/Pkwy Intersection Analysis
County:	Flagler

Is this a 4 way intersection?

- ○ Yes, my intersection has four approaches

If not, which 3 approaches exist in the intersection?

- ○ EB, WB, and SB
- ○ EB, WB, and NB
- ◉ EB, SB, and NB
- ○ WB, SB, and NB

Is the Mainline Oriented North/South? Enter Yes or No: ◉ Yes ○ No

K Factors	
Mainline	9.00%
Side street	9.00%

D Factors	*Mainline*
Northbound (NB)	59.0%
Southbound (SB)	41.0%
	Side street
Westbound (WB)	0.0%
Eastbound (EB)	61.0%

Do you have FTSUTMS Model Year traffic from which you would like to interpolate/extrapolate for project years? (Y/N)

Enter Yes or No: ◉ Yes ○ No

If "Yes" go to cell C47 If "No" go to cell C31

Enter Year and Growth Rates from Base Year:

	Year	*Rate* (1.0% = 0.01) Mainline	Side Street
Base	2015	0.00%	0.00%
Opening	2025		
Mid	2035		
Design	2045		

Mainline Growth Function: ◉ Linear ○ Exponential ○ Decaying

Side Street Growth Function: ◉ Linear ○ Exponential ○ Decaying

Enter Base Year AADTs for Volume Comparison:
(growth rates are used to calculate other project years)

From West: EB Approach	*From East: WB Approach*	*From North: SB Approach*	*From South: NB Approach*	***TOTAL***
0	0	0	0	0

Enter Project and Model Years

	Year
Base	2015
Opening	2020
Mid	2025
Design	2030
Model	2030

Enter Base and Model Year AADTs for Volume Comparison:
(volumes for other project years are calculated by interpolation)

	From West: EB Approach	*From East: WB Approach*	*From North: SB Approach*	*From South: NB Approach*	***TOTAL***
2015	267	0	5500	5500	11267
2030	340	0	9500	9500	19340

		1st Guess Turning %'s for AADT Balancing	**Actual/Counted Traffic for 2015**
(EB LT)	*West-to-North*	75.0%	9
(EB THRU)	*West-to-East*	0.0%	0
(EB RT)	*West-to-South*	25.0%	3
(WB LT)	*East-to-South*	0.0%	0
(WB THRU)	*East-to-West*	0.0%	0
(WB RT)	*East-to-North*	0.0%	0
(SB LT)	*North-to-East*	0.0%	0
(SB THRU)	*North-to-South*	97.4%	187
(SB RT)	*North-to-West*	2.6%	5
(NB LT)	*South-to-West*	0.0%	0
(NB THRU)	*South-to-North*	100.0%	237
(NB RT)	*South-to-East*	0.0%	0

Desired Closure: 1.00

Existing Year AADTs

Existing Turning Movement Counts

FSUTMS Model Year AADTs

First Guess Turning % Option Used
Existing Turning Movement Counts

Only the existing year total departure volumes [AADT*K*(1-D)] will be used to calculate the turning percentages first guess.

The turning percentages first guess is the same as the ***actual distribution of turning volumes entered***. No balancing technique is used.

Only the FSUTMS model year departure volumes [AADT*K*(1-D)] will be used to calculate the turning percentages first guess.

PROJECT TRAFFIC FOR Belle Terre Blvd AT Zinnia Tr (N) - AM

DESIGN HOUR TURNING MOVEMENTS IN YEAR 2015

Belle Terre Blvd
(5500)
203
4.3% 9 | 95.7% 194 | 0.0% 0

Zinnia Tr (N) - AM
0 0.0%
0 0.0% 0 0
0 0.0%

(270) 15
74.1% 11
0.0% 0
25.9% 4

Zinnia Tr (N) - AM

0 | 292 | 0
0.0% | 100.0% | 0.0%
292
(5500)
Belle Terre Blvd

(XXXXX)	2015 AADT
XXXX	2015 DDHV
K ML =	9.00%
K SS =	9.00%

D Factors
59.0% NB
41.0% SB
61.0% EB

DESIGN HOUR TURNING MOVEMENTS IN YEAR 2020

Belle Terre Blvd
(6800)
252
3.8% 10 | 96.2% 242 | 0.0% 0

Zinnia Tr (N) - AM
0 0.0%
0 0.0% 0 0
0 0.0%

(290) 16
74.1% 12
0.0% 0
25.9% 4

Zinnia Tr (N) - AM

0 | 363 | 0
0.0% | 100.0% | 0.0%
363
(6800)
Belle Terre Blvd

(XXXXX)	2020 AADT
XXXX	2020 DDHV
K ML =	9.00%
K SS =	9.00%

D Factors
59.0% NB
41.0% SB
61.0% EB

DESIGN HOUR TURNING MOVEMENTS IN YEAR 2025

Belle Terre Blvd
(8200)
301
3.5% 11 | 96.5% 290 | 0.0% 0

Zinnia Tr (N) - AM
0 0.0%
0 0.0% 0 0
0 0.0%

(320) 17
74.2% 13
0.0% 0
25.8% 4

Zinnia Tr (N) - AM

0 | 434 | 0
0.0% | 100.0% | 0.0%
434
(8200)
Belle Terre Blvd

(XXXXX)	2025 AADT
XXXX	2025 DDHV
K ML =	9.00%
K SS =	9.00%

D Factors
59.0% NB
41.0% SB
61.0% EB

DESIGN HOUR TURNING MOVEMENTS IN YEAR 2030

Belle Terre Blvd
(9500)
351
3.3% 12 | 96.7% 339 | 0.0% 0

Zinnia Tr (N) - AM
0 0.0%
0 0.0% 0 0
0 0.0%

(340) 19
74.2% 14
0.0% 0
25.8% 5

Zinnia Tr (N) - AM

0 | 504 | 0
0.0% | 100.0% | 0.0%
504
(9500)
Belle Terre Blvd

(XXXXX)	2030 AADT
XXXX	2030 DDHV
K ML =	9.00%
K SS =	9.00%

D Factors
59.0% NB
41.0% SB
61.0% EB

PROJECT TRAFFIC FOR Belle Terre Blvd AT Zinnia Tr (N) - AM

2015 INPUT TMCs COMPARED TO 2015 DHV

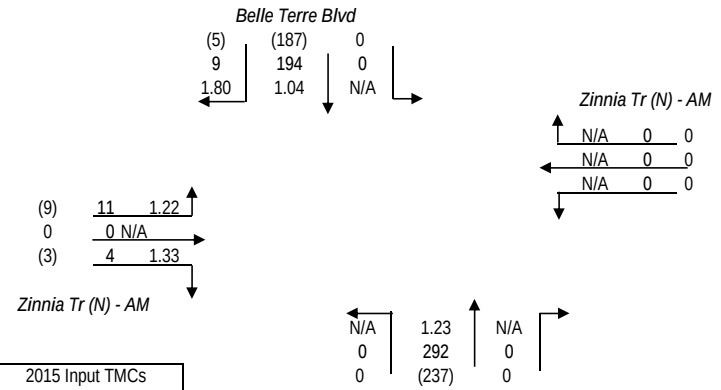

(XXX)	2015 Input TMCs
XXX	Calculated 2015 DHV
X.XX	Ratio

2015 INPUT TMCs COMPARED TO 2020 DHV

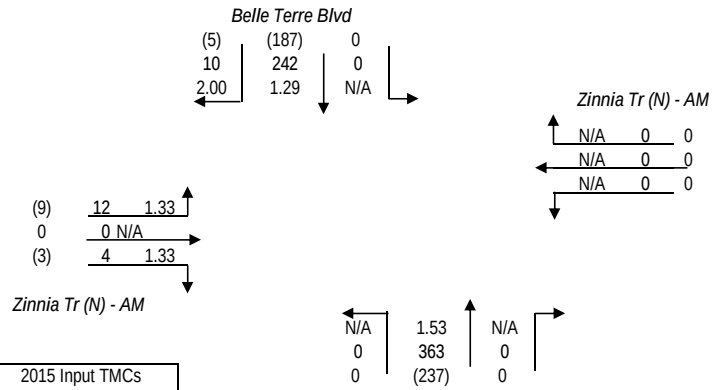

(XXX)	2015 Input TMCs
XXX	Calculated 2020 DHV
X.XX	Ratio

2015 INPUT TMCs COMPARED TO 2025 DHV

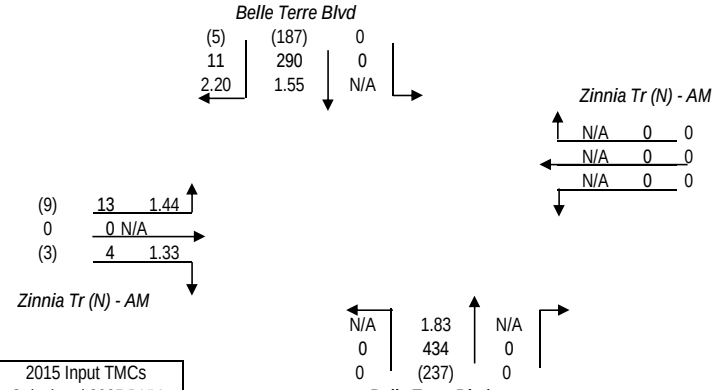

(XXX)	2015 Input TMCs
XXX	Calculated 2025 DHV
X.XX	Ratio

2015 INPUT TMCs COMPARED TO 2030 DHV

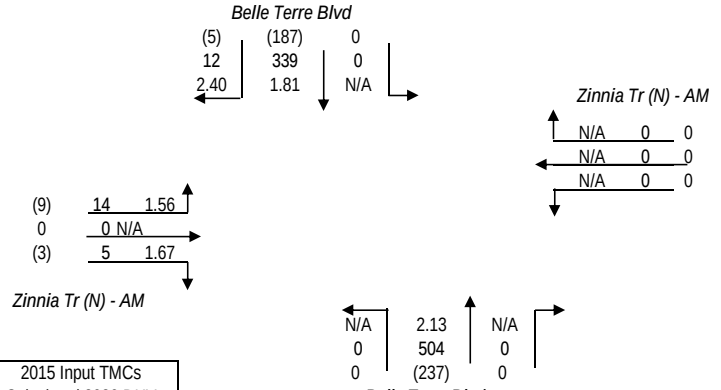

(XXX)	2015 Input TMCs
XXX	Calculated 2030 DHV
X.XX	Ratio

TURNS5 ANALYSIS SHEET - INPUT

Analyst:	-
Date:	12-Nov-15
Highway:	Belle Terre Blvd
Intersection:	Zaun Tr - AM
Project:	Belle Terre Blvd/Pkwy Intersection Analysis
County:	Flagler

Is this a 4 way intersection?

- ○ Yes, my intersection has four approaches

If not, which 3 approaches exist in the intersection?

- ○ EB, WB, and SB
- ○ EB, WB, and NB
- ◉ EB, SB, and NB
- ○ WB, SB, and NB

Is the Mainline Oriented North/South? (Enter Yes or No)

- ◉ Yes
- ○ No

K Factors	Mainline	**D Factors**	*Mainline*
	9.00%	Northbound (NB)	59.0%
	Side street	Southbound (SB)	41.0%
	9.00%		*Side street*
		Westbound (WB)	0.0%
		Eastbound (EB)	61.0%

Do you have FTSUTMS Model Year traffic from which you would like to interpolate/extrapolate for project years? (Y/N) (Enter Yes or No)

- ◉ Yes
- ○ No

If "Yes" go to cell C47 If "No" go to cell C31

Enter Year and Growth Rates from Base Year:

	Year	*Rate* (1.0% = 0.01) Mainline	Side Street
Base	2015	0.00%	0.00%
Opening	2025		
Mid	2035		
Design	2045		

Mainline Growth Function

- ◉ Linear
- ○ Exponential
- ○ Decaying

Side Street Growth Function

- ◉ Linear
- ○ Exponential
- ○ Decaying

Enter Base Year AADTs for Volume Comparison:
(growth rates are used to calculate other project years)

From West: EB Approach	*From East: WB Approach*	*From North: SB Approach*	*From South: NB Approach*	***TOTAL***
0	0	0	0	0

Enter Project and Model Years

	Year
Base	2015
Opening	2020
Mid	2025
Design	2030
Model	2030

Enter Base and Model Year AADTs for Volume Comparison:
(volumes for other project years are calculated by interpolation)

	From West: EB Approach	*From East: WB Approach*	*From North: SB Approach*	*From South: NB Approach*	***TOTAL***
2015	400	0	6000	5500	11900
2030	510	0	10000	9500	20010

		1st Guess Turning %'s for AADT Balancing	**Actual/Counted Traffic for 2015**
(EB LT)	*West-to-North*	81.5%	22
(EB THRU)	*West-to-East*	0.0%	0
(EB RT)	*West-to-South*	18.5%	5
(WB LT)	*East-to-South*	0.0%	0
(WB THRU)	*East-to-West*	0.0%	0
(WB RT)	*East-to-North*	0.0%	0
(SB LT)	*North-to-East*	0.0%	0
(SB THRU)	*North-to-South*	96.9%	187
(SB RT)	*North-to-West*	3.1%	6
(NB LT)	*South-to-West*	0.4%	1
(NB THRU)	*South-to-North*	99.6%	245
(NB RT)	*South-to-East*	0.0%	0

Desired Closure: 1.00

Existing Year AADTs

Existing Turning Movement Counts

FSUTMS Model Year AADTs

First Guess Turning % Option Used
Existing Turning Movement Counts

Only the existing year total departure volumes [AADT*K*(1-D)] will be used to calculate the turning percentages first guess.

The turning percentages first guess is the same as the ***actual distribution of turning volumes entered***. No balancing technique is used.

Only the FSUTMS model year departure volumes [AADT*K*(1-D)] will be used to calculate the turning percentages first guess.

PROJECT TRAFFIC FOR Belle Terre Blvd AT Zaun Tr - AM

DESIGN HOUR TURNING MOVEMENTS IN YEAR 2015

Belle Terre Blvd
(6000)
221
5.7% 13 | 94.3% 208 | 0.0% 0

Zaun Tr - AM
0 0.0%
0 0.0% 0 0
0 0.0%

(400) 22
83.0% 18
0.0% 0
17.0% 4

Zaun Tr - AM

2 0.7% | 290 99.3% | 0 0.0%
292
(5500)
Belle Terre Blvd

(XXXXX)	2015 AADT	
XXXX	2015 DDHV	
K ML =	9.00%	
K SS =	9.00%	

D Factors
59.0% NB
41.0% SB
61.0% EB

DESIGN HOUR TURNING MOVEMENTS IN YEAR 2020

Belle Terre Blvd
(7300)
271
4.9% 13 | 95.1% 258 | 0.0% 0

Zaun Tr - AM
0 0.0%
0 0.0% 0 0
0 0.0%

(440) 24
82.6% 20
0.0% 0
17.4% 4

Zaun Tr - AM

2 0.6% | 361 99.4% | 0 0.0%
363
(6800)
Belle Terre Blvd

(XXXXX)	2020 AADT	
XXXX	2020 DDHV	
K ML =	9.00%	
K SS =	9.00%	

D Factors
59.0% NB
41.0% SB
61.0% EB

DESIGN HOUR TURNING MOVEMENTS IN YEAR 2025

Belle Terre Blvd
(8700)
320
4.6% 15 | 95.4% 305 | 0.0% 0

Zaun Tr - AM
0 0.0%
0 0.0% 0 0
0 0.0%

(470) 26
82.4% 21
0.0% 0
17.6% 5

Zaun Tr - AM

3 0.6% | 431 99.4% | 0 0.0%
434
(8200)
Belle Terre Blvd

(XXXXX)	2025 AADT	
XXXX	2025 DDHV	
K ML =	9.00%	
K SS =	9.00%	

D Factors
59.0% NB
41.0% SB
61.0% EB

DESIGN HOUR TURNING MOVEMENTS IN YEAR 2030

Belle Terre Blvd
(10000)
369
4.2% 15 | 95.8% 354 | 0.0% 0

Zaun Tr - AM
0 0.0%
0 0.0% 0 0
0 0.0%

(510) 28
82.2% 23
0.0% 0
17.8% 5

Zaun Tr - AM

3 0.5% | 501 99.5% | 0 0.0%
504
(9500)
Belle Terre Blvd

(XXXXX)	2030 AADT	
XXXX	2030 DDHV	
K ML =	9.00%	
K SS =	9.00%	

D Factors
59.0% NB
41.0% SB
61.0% EB

PROJECT TRAFFIC FOR Belle Terre Blvd AT Zaun Tr - AM

2015 INPUT TMCs COMPARED TO 2015 DHV

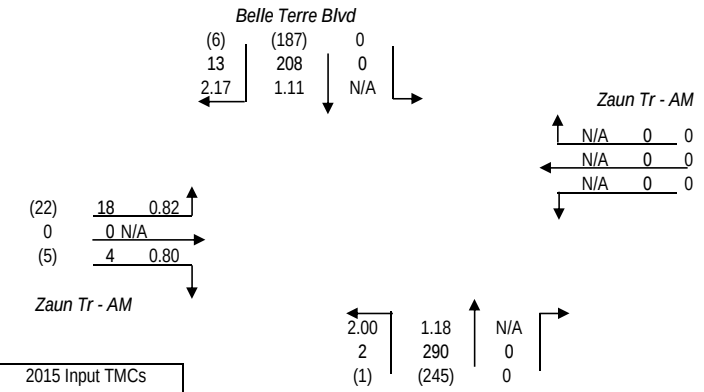

(XXX)	2015 Input TMCs
XXX	Calculated 2015 DHV
X.XX	Ratio

2015 INPUT TMCs COMPARED TO 2020 DHV

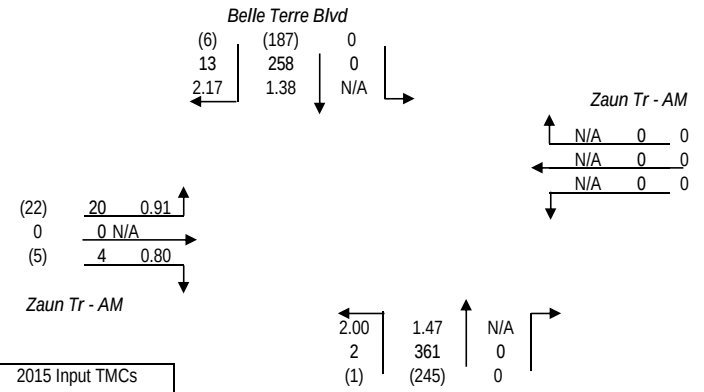

(XXX)	2015 Input TMCs
XXX	Calculated 2020 DHV
X.XX	Ratio

2015 INPUT TMCs COMPARED TO 2025 DHV

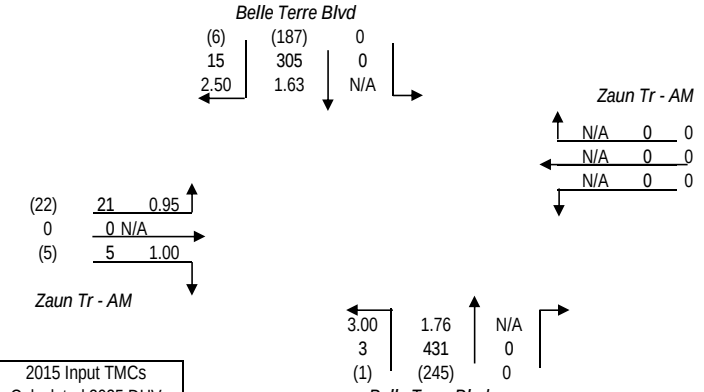

(XXX)	2015 Input TMCs
XXX	Calculated 2025 DHV
X.XX	Ratio

2015 INPUT TMCs COMPARED TO 2030 DHV

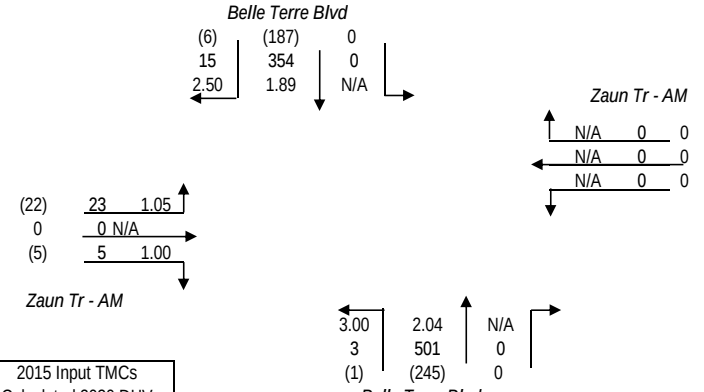

(XXX)	2015 Input TMCs
XXX	Calculated 2030 DHV
X.XX	Ratio

TURNS5 ANALYSIS SHEET - INPUT

Analyst:	-
Date:	12-Nov-15
Highway:	Belle Terre Blvd
Intersection:	Zebulah's Tr (S) - AM
Project:	Belle Terre Blvd/Pkwy Intersection Analysis
County:	Flagler

Is this a 4 way intersection?

- ○ Yes, my intersection has four approaches

If not, which 3 approaches exist in the intersection?

- ○ EB, WB, and SB
- ○ EB, WB, and NB
- ◉ EB, SB, and NB
- ○ WB, SB, and NB

Is the Mainline Oriented North/South? (Enter Yes or No)

- ◉ Yes
- ○ No

K Factors	
Mainline	9.00%
Side street	9.00%

D Factors	*Mainline*
Northbound (NB)	59.0%
Southbound (SB)	41.0%
	Side street
Westbound (WB)	0.0%
Eastbound (EB)	61.0%

Do you have FTSUTMS Model Year traffic from which you would like to interpolate/extrapolate for project years? (Y/N) (Enter Yes or No)

- ◉ Yes
- ○ No

If "Yes" go to cell C47 If "No" go to cell C31

Enter Year and Growth Rates from Base Year:

	Year	*Rate* (1.0% = 0.01) Mainline	Side Street
Base	2015	0.00%	0.00%
Opening	2025		
Mid	2035		
Design	2045		

Mainline Growth Function

- ◉ Linear
- ○ Exponential
- ○ Decaying

Side Street Growth Function

- ◉ Linear
- ○ Exponential
- ○ Decaying

Enter Base Year AADTs for Volume Comparison:
(growth rates are used to calculate other project years)

From West: EB Approach	*From East: WB Approach*	*From North: SB Approach*	*From South: NB Approach*	***TOTAL***
0	0	0	0	0

Enter Project and Model Years

	Year
Base	2015
Opening	2020
Mid	2025
Design	2030
Model	2030

Enter Base and Model Year AADTs for Volume Comparison:
(volumes for other project years are calculated by interpolation)

	From West: EB Approach	*From East: WB Approach*	*From North: SB Approach*	*From South: NB Approach*	***TOTAL***
2015	611	0	6000	6000	12611
2030	790	0	11000	11000	22790

First Guess Turning % Option Used
Existing Turning Movement Counts

		1st Guess Turning %'s for AADT Balancing	**Actual/Counted Traffic for 2015**
(EB LT)	*West-to-North*	48.7%	19
(EB THRU)	*West-to-East*	0.0%	0
(EB RT)	*West-to-South*	51.3%	20
(WB LT)	*East-to-South*	0.0%	0
(WB THRU)	*East-to-West*	0.0%	0
(WB RT)	*East-to-North*	0.0%	0
(SB LT)	*North-to-East*	0.0%	0
(SB THRU)	*North-to-South*	96.1%	173
(SB RT)	*North-to-West*	3.9%	7
(NB LT)	*South-to-West*	2.2%	6
(NB THRU)	*South-to-North*	97.8%	261
(NB RT)	*South-to-East*	0.0%	0

Desired Closure: 1.00

Existing Year AADTs

Only the existing year total departure volumes [AADT*K*(1-D)] will be used to calculate the turning percentages first guess.

Existing Turning Movement Counts

The turning percentages first guess is the same as the ***actual distribution of turning volumes entered***. No balancing technique is used.

FSUTMS Model Year AADTs

Only the FSUTMS model year departure volumes [AADT*K*(1-D)] will be used to calculate the turning percentages first guess.

PROJECT TRAFFIC FOR Belle Terre Blvd AT Zebulah's Tr (S) - AM

DESIGN HOUR TURNING MOVEMENTS IN YEAR 2015

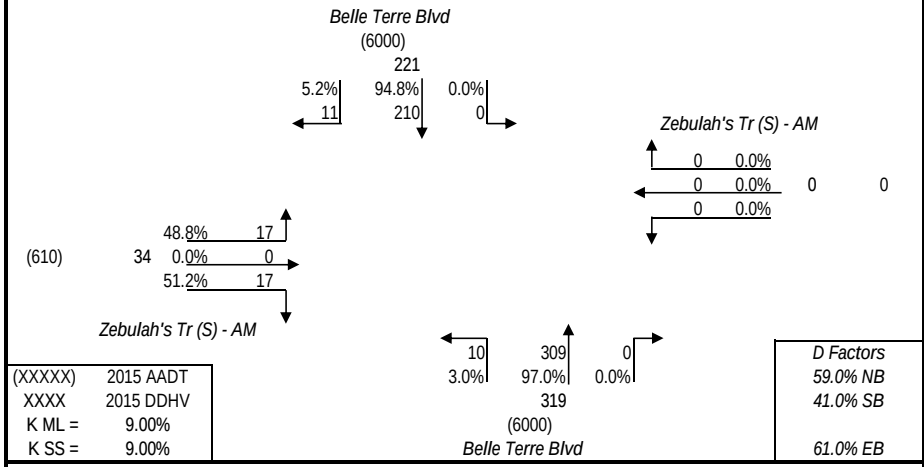

		D Factors
(XXXXX)	2015 AADT	59.0% NB
XXXX	2015 DDHV	41.0% SB
K ML =	9.00%	
K SS =	9.00%	61.0% EB

DESIGN HOUR TURNING MOVEMENTS IN YEAR 2020

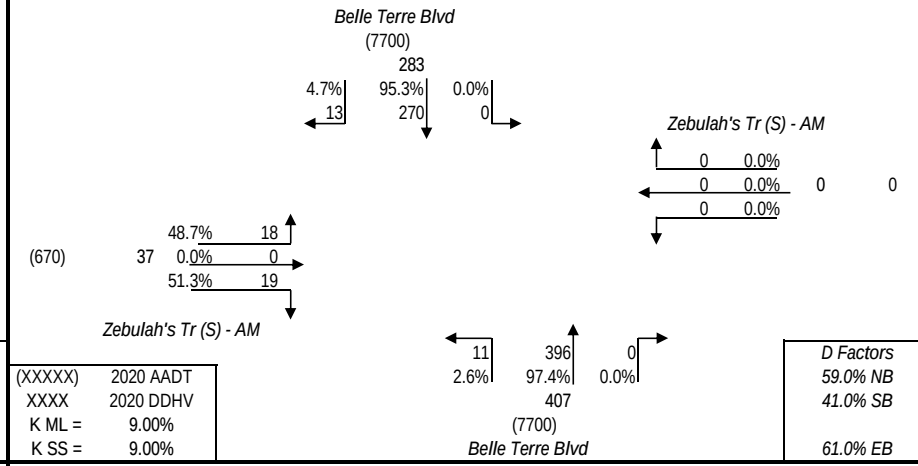

		D Factors
(XXXXX)	2020 AADT	59.0% NB
XXXX	2020 DDHV	41.0% SB
K ML =	9.00%	
K SS =	9.00%	61.0% EB

DESIGN HOUR TURNING MOVEMENTS IN YEAR 2025

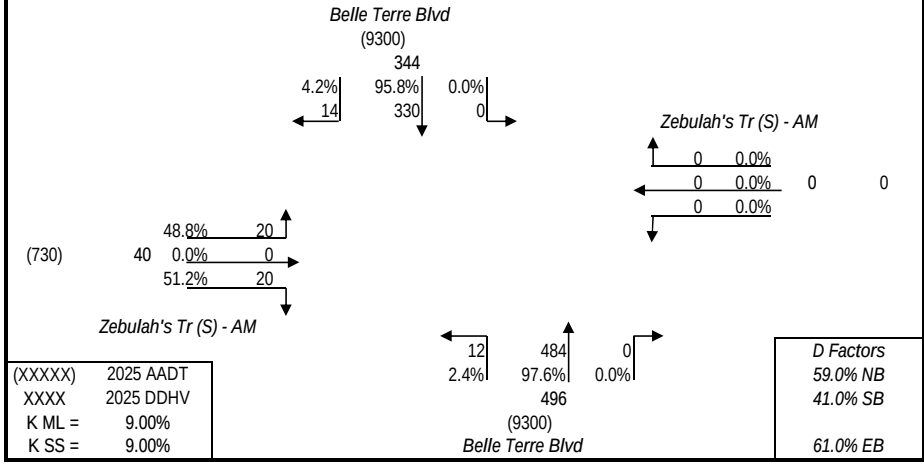

		D Factors
(XXXXX)	2025 AADT	59.0% NB
XXXX	2025 DDHV	41.0% SB
K ML =	9.00%	
K SS =	9.00%	61.0% EB

DESIGN HOUR TURNING MOVEMENTS IN YEAR 2030

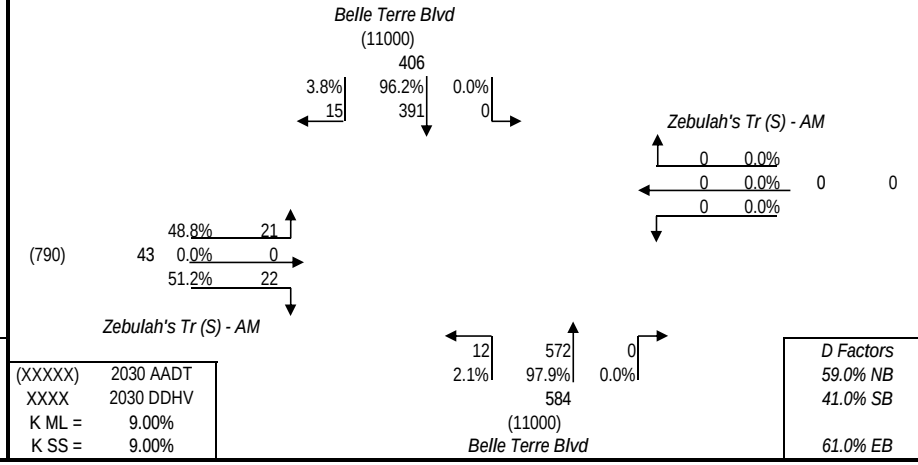

		D Factors
(XXXXX)	2030 AADT	59.0% NB
XXXX	2030 DDHV	41.0% SB
K ML =	9.00%	
K SS =	9.00%	61.0% EB

PROJECT TRAFFIC FOR Belle Terre Blvd AT Zebulah's Tr (S) - AM

2015 INPUT TMCs COMPARED TO 2015 DHV

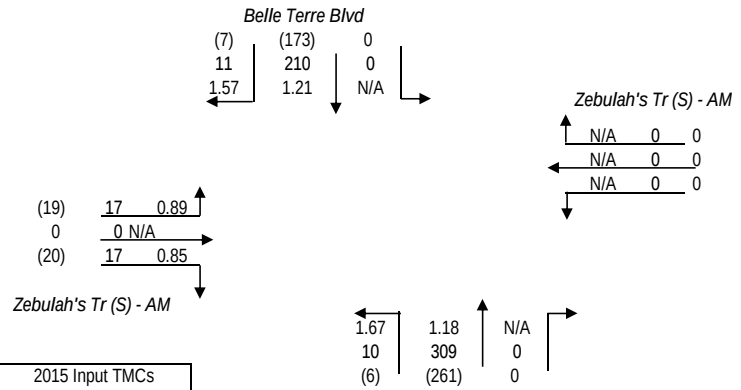

(XXX)	2015 Input TMCs
XXX	Calculated 2015 DHV
X.XX	Ratio

2015 INPUT TMCs COMPARED TO 2020 DHV

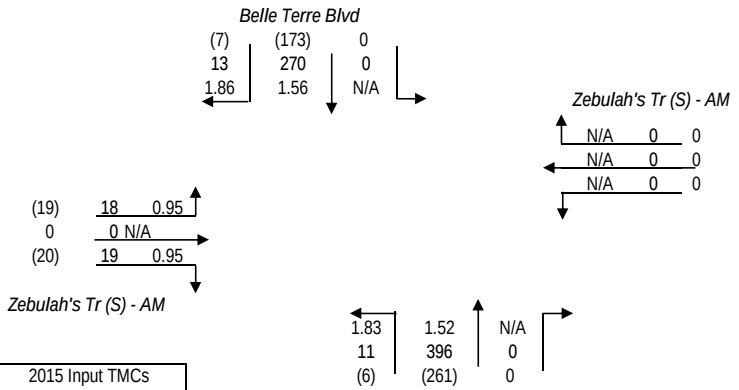

(XXX)	2015 Input TMCs
XXX	Calculated 2020 DHV
X.XX	Ratio

2015 INPUT TMCs COMPARED TO 2025 DHV

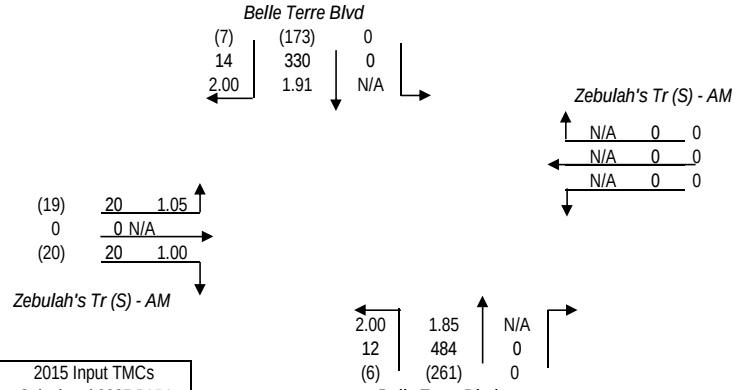

(XXX)	2015 Input TMCs
XXX	Calculated 2025 DHV
X.XX	Ratio

2015 INPUT TMCs COMPARED TO 2030 DHV

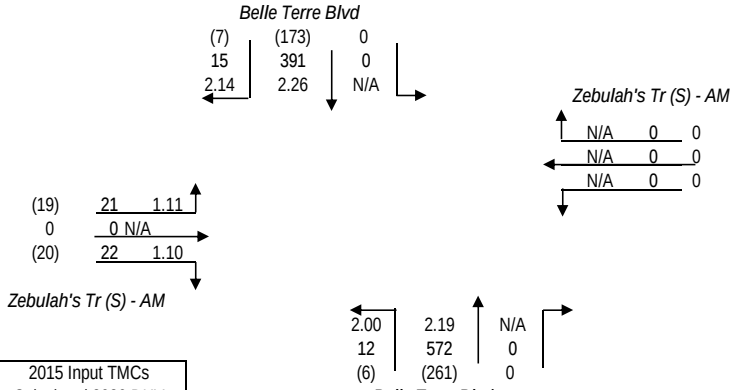

(XXX)	2015 Input TMCs
XXX	Calculated 2030 DHV
X.XX	Ratio

TURNS5 ANALYSIS SHEET - INPUT

Analyst:	-
Date:	12-Nov-15
Highway:	Belle Terre Blvd
Intersection:	Zebulah's Tr (N) - AM
Project:	Belle Terre Blvd/Pkwy Intersection Analysis
County:	Flagler

Is this a 4 way intersection?

- ○ Yes, my intersection has four approaches

If not, which 3 approaches exist in the intersection?

- ○ EB, WB, and SB
- ○ EB, WB, and NB
- ◉ EB, SB, and NB
- ○ WB, SB, and NB

Is the Mainline Oriented North/South? Enter Yes or No: ◉ Yes ○ No

K Factors	
Mainline	9.00%
Side street	9.00%

D Factors	*Mainline*
Northbound (NB)	59.0%
Southbound (SB)	41.0%
	Side street
Westbound (WB)	0.0%
Eastbound (EB)	61.0%

Do you have FTSUTMS Model Year traffic from which you would like to interpolate/extrapolate for project years? (Y/N)

Enter Yes or No: ◉ Yes ○ No

If "Yes" go to cell C47 — If "No" go to cell C31

Enter Year and Growth Rates from Base Year:

	Year	*Rate* (1.0% = 0.01) Mainline	Side Street
Base	2015	0.00%	0.00%
Opening	2025		
Mid	2035		
Design	2045		

Mainline Growth Function: ◉ Linear ○ Exponential ○ Decaying

Side Street Growth Function: ◉ Linear ○ Exponential ○ Decaying

Enter Base Year AADTs for Volume Comparison:
(growth rates are used to calculate other project years)

From West: EB Approach	*From East: WB Approach*	*From North: SB Approach*	*From South: NB Approach*	***TOTAL***
0	0	0	0	0

Enter Project and Model Years

	Year
Base	2015
Opening	2020
Mid	2025
Design	2030
Model	2030

Enter Base and Model Year AADTs for Volume Comparison:
(volumes for other project years are calculated by interpolation)

	From West: EB Approach	*From East: WB Approach*	*From North: SB Approach*	*From South: NB Approach*	***TOTAL***
2015	1211	0	7200	6000	14411
2030	1600	0	12000	11000	24600

First Guess Turning % Option Used
Existing Turning Movement Counts

		1st Guess Turning %'s for AADT Balancing	**Actual/Counted Traffic for 2015**
(EB LT)	*West-to-North*	93.1%	54
(EB THRU)	*West-to-East*	0.0%	0
(EB RT)	*West-to-South*	6.9%	4
(WB LT)	*East-to-South*	0.0%	0
(WB THRU)	*East-to-West*	0.0%	0
(WB RT)	*East-to-North*	0.0%	0
(SB LT)	*North-to-East*	0.0%	0
(SB THRU)	*North-to-South*	92.3%	179
(SB RT)	*North-to-West*	7.7%	15
(NB LT)	*South-to-West*	0.7%	2
(NB THRU)	*South-to-North*	99.3%	278
(NB RT)	*South-to-East*	0.0%	0

Desired Closure: 1.00

Existing Year AADTs — Only the existing year total departure volumes [AADT*K*(1-D)] will be used to calculate the turning percentages first guess.

Existing Turning Movement Counts — The turning percentages first guess is the same as the ***actual distribution of turning volumes entered***. No balancing technique is used.

FSUTMS Model Year AADTs — Only the FSUTMS model year departure volumes [AADT*K*(1-D)] will be used to calculate the turning percentages first guess.

PROJECT TRAFFIC FOR Belle Terre Blvd AT Zebulah's Tr (N) - AM

DESIGN HOUR TURNING MOVEMENTS IN YEAR 2015

Belle Terre Blvd
(7200)
266

15.0% 40 | 85.0% 226 | 0.0% 0

Zebulah's Tr (N) - AM
0 0.0%
0 0.0% 0 0
0 0.0%

(1200) 66
93.9% 62
0.0% 0
6.1% 4

Zebulah's Tr (N) - AM

4 | 315 | 0
1.3% | 98.7% | 0.0%
319
(6000)
Belle Terre Blvd

(XXXXX)	2015 AADT
XXXX	2015 DDHV
K ML =	9.00%
K SS =	9.00%

D Factors
59.0% NB
41.0% SB
61.0% EB

DESIGN HOUR TURNING MOVEMENTS IN YEAR 2020

Belle Terre Blvd
(8800)
325

13.3% 43 | 86.7% 282 | 0.0% 0

Zebulah's Tr (N) - AM
0 0.0%
0 0.0% 0 0
0 0.0%

(1300) 74
93.5% 69
0.0% 0
6.5% 5

Zebulah's Tr (N) - AM

5 | 402 | 0
1.2% | 98.8% | 0.0%
407
(7700)
Belle Terre Blvd

(XXXXX)	2020 AADT
XXXX	2020 DDHV
K ML =	9.00%
K SS =	9.00%

D Factors
59.0% NB
41.0% SB
61.0% EB

DESIGN HOUR TURNING MOVEMENTS IN YEAR 2025

Belle Terre Blvd
(10000)
384

12.2% 47 | 87.8% 337 | 0.0% 0

Zebulah's Tr (N) - AM
0 0.0%
0 0.0% 0 0
0 0.0%

(1500) 81
93.2% 75
0.0% 0
6.8% 6

Zebulah's Tr (N) - AM

5 | 491 | 0
1.1% | 98.9% | 0.0%
496
(9300)
Belle Terre Blvd

(XXXXX)	2025 AADT
XXXX	2025 DDHV
K ML =	9.00%
K SS =	9.00%

D Factors
59.0% NB
41.0% SB
61.0% EB

DESIGN HOUR TURNING MOVEMENTS IN YEAR 2030

Belle Terre Blvd
(12000)
443

11.1% 49 | 88.9% 394 | 0.0% 0

Zebulah's Tr (N) - AM
0 0.0%
0 0.0% 0 0
0 0.0%

(1600) 88
93.0% 82
0.0% 0
7.0% 6

Zebulah's Tr (N) - AM

6 | 578 | 0
1.1% | 98.9% | 0.0%
584
(11000)
Belle Terre Blvd

(XXXXX)	2030 AADT
XXXX	2030 DDHV
K ML =	9.00%
K SS =	9.00%

D Factors
59.0% NB
41.0% SB
61.0% EB

PROJECT TRAFFIC FOR Belle Terre Blvd AT Zebulah's Tr (N) - AM

2015 INPUT TMCs COMPARED TO 2015 DHV

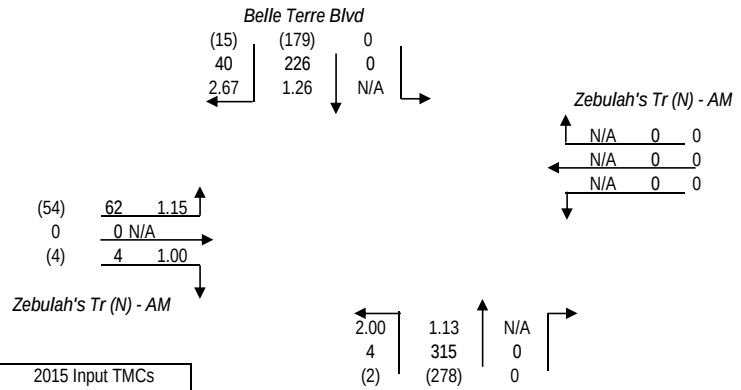

(XXX)	2015 Input TMCs
XXX	Calculated 2015 DHV
X.XX	Ratio

2015 INPUT TMCs COMPARED TO 2020 DHV

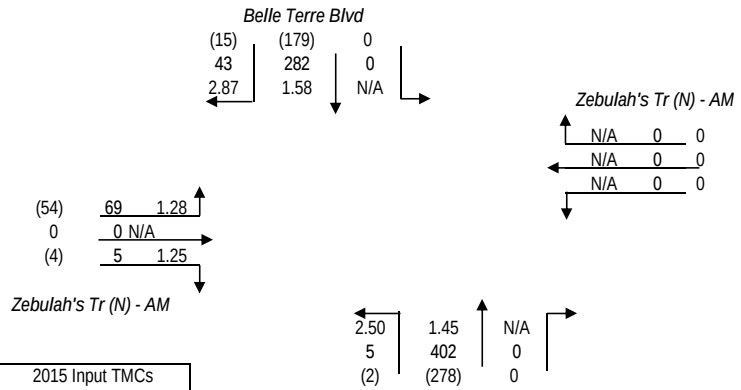

(XXX)	2015 Input TMCs
XXX	Calculated 2020 DHV
X.XX	Ratio

2015 INPUT TMCs COMPARED TO 2025 DHV

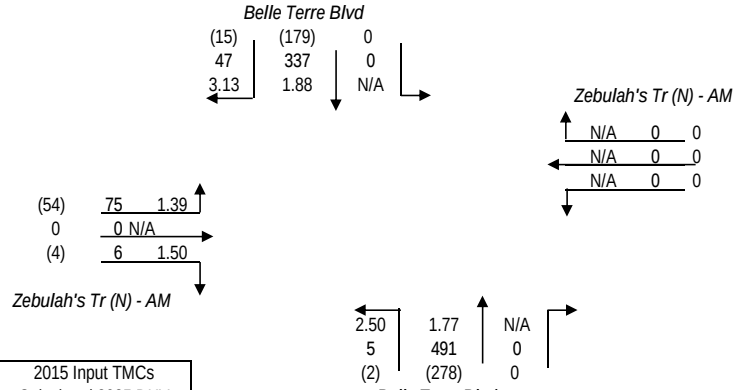

(XXX)	2015 Input TMCs
XXX	Calculated 2025 DHV
X.XX	Ratio

2015 INPUT TMCs COMPARED TO 2030 DHV

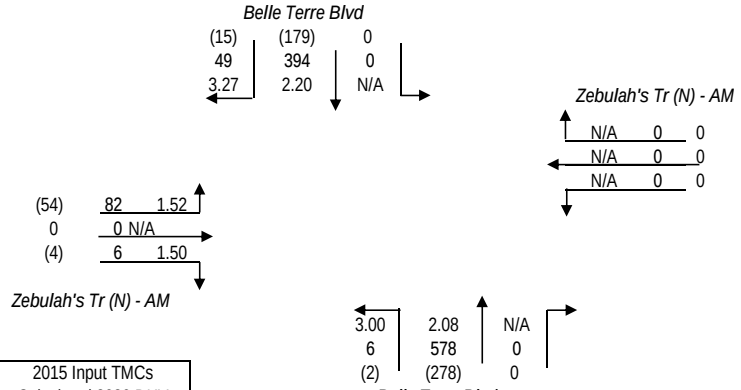

(XXX)	2015 Input TMCs
XXX	Calculated 2030 DHV
X.XX	Ratio

TURNS5 ANALYSIS SHEET - INPUT

Analyst:	-
Date:	12-Nov-15
Highway:	Belle Terre Blvd/Pkwy
Intersection:	SR 100 - AM
Project:	Belle Terre Blvd/Pkwy Intersection Analysis
County:	Flagler

Is this a 4 way intersection?

- (●) Yes, my intersection has four approaches

If not, which 3 approaches exist in the intersection?

- ( ) EB, WB, and SB
- ( ) EB, WB, and NB
- ( ) EB, SB, and NB
- ( ) WB, SB, and NB

Is the Mainline Oriented North/South? Enter Yes or No: (●) Yes ( ) No

K Factors	
Mainline	9.00%
Side street	9.00%

D Factors	*Mainline*
Northbound (NB)	59.0%
Southbound (SB)	41.0%
	Side street
Westbound (WB)	61.0%
Eastbound (EB)	39.0%

Do you have FTSUTMS Model Year traffic from which you would like to interpolate/extrapolate for project years? (Y/N)

Enter Yes or No: (●) Yes ( ) No

If "Yes" go to cell C47 — If "No" go to cell C31

Enter Year and Growth Rates from Base Year:

	Year	*Rate* (1.0% = 0.01) Mainline	Side Street
Base	2015	0.00%	0.00%
Opening	2025		
Mid	2035		
Design	2045		

Mainline Growth Function: (●) Linear ( ) Exponential ( ) Decaying

Side Street Growth Function: (●) Linear ( ) Exponential ( ) Decaying

Enter Base Year AADTs for Volume Comparison:
(growth rates are used to calculate other project years)

From West: EB Approach	*From East: WB Approach*	*From North: SB Approach*	*From South: NB Approach*	***TOTAL***
0	0	0	0	0

Enter Project and Model Years

	Year
Base	2015
Opening	2020
Mid	2025
Design	2030
Model	2030

Enter Base and Model Year AADTs for Volume Comparison:
(volumes for other project years are calculated by interpolation)

	From West: EB Approach	*From East: WB Approach*	*From North: SB Approach*	*From South: NB Approach*	***TOTAL***
2015	13900	19600	24000	7200	64700
2030	17000	24000	30500	12000	83500

First Guess Turning % Option Used
Existing Turning Movement Counts

		1st Guess Turning %'s for AADT Balancing	**Actual/Counted Traffic for 2015**
(EB LT)	*West-to-North*	21.7%	107
(EB THRU)	*West-to-East*	74.9%	369
(EB RT)	*West-to-South*	3.4%	17
(WB LT)	*East-to-South*	8.6%	77
(WB THRU)	*East-to-West*	54.3%	489
(WB RT)	*East-to-North*	37.1%	334
(SB LT)	*North-to-East*	58.8%	493
(SB THRU)	*North-to-South*	12.1%	101
(SB RT)	*North-to-West*	29.1%	244
(NB LT)	*South-to-West*	19.0%	63
(NB THRU)	*South-to-North*	33.7%	112
(NB RT)	*South-to-East*	47.3%	157

Desired Closure: 1.00

Existing Year AADTs — Only the existing year total departure volumes [AADT*K*(1-D)] will be used to calculate the turning percentages first guess.

Existing Turning Movement Counts — The turning percentages first guess is the same as the ***actual distribution of turning volumes entered***. No balancing technique is used.

FSUTMS Model Year AADTs — Only the FSUTMS model year departure volumes [AADT*K*(1-D)] will be used to calculate the turning percentages first guess.

PROJECT TRAFFIC FOR Belle Terre Blvd/Pkwy AT SR 100 - AM

DESIGN HOUR TURNING MOVEMENTS IN YEAR 2015

Belle Terre Blvd/Pkwy

(24000)

886

36.9% 327 | 19.0% 168 | 44.1% 391

SR 100 - AM

662 61.5%
346 32.2% 1076 (20000)
68 6.3%

(14000) 488

55.5% 271
40.6% 198
3.9% 19

SR 100 - AM

52 13.5% | 254 66.7% | 76 19.8%

382

(7200)

Belle Terre Blvd/Pkwy

(XXXXX)	2015 AADT
XXXX	2015 DDHV
K ML =	9.00%
K SS =	9.00%

D Factors
59.0% NB
41.0% SB
61.0% WB
39.0% EB

DESIGN HOUR TURNING MOVEMENTS IN YEAR 2020

Belle Terre Blvd/Pkwy

(26000)

966

36.0% 348 | 21.4% 206 | 42.6% 412

SR 100 - AM

701 60.6%
372 32.1% 1157 (21000)
84 7.3%

(15000) 524

55.2% 289
40.3% 211
4.5% 24

SR 100 - AM

64 13.6% | 311 66.6% | 92 19.8%

467

(8800)

Belle Terre Blvd/Pkwy

(XXXXX)	2020 AADT
XXXX	2020 DDHV
K ML =	9.00%
K SS =	9.00%

D Factors
59.0% NB
41.0% SB
61.0% WB
39.0% EB

DESIGN HOUR TURNING MOVEMENTS IN YEAR 2025

Belle Terre Blvd/Pkwy

(28000)

1045

35.2% 368 | 23.4% 244 | 41.4% 433

SR 100 - AM

741 59.9%
396 32.0% 1237 (23000)
100 8.1%

(16000) 560

54.8% 307
40.2% 225
5.0% 28

SR 100 - AM

76 13.7% | 367 66.5% | 109 19.8%

552

(10000)

Belle Terre Blvd/Pkwy

(XXXXX)	2025 AADT
XXXX	2025 DDHV
K ML =	9.00%
K SS =	9.00%

D Factors
59.0% NB
41.0% SB
61.0% WB
39.0% EB

DESIGN HOUR TURNING MOVEMENTS IN YEAR 2030

Belle Terre Blvd/Pkwy

(31000)

1125

34.8% 392 | 25.4% 285 | 39.8% 448

SR 100 - AM

778 59.0%
423 32.1% 1318 (24000)
117 8.9%

(17000) 597

54.7% 327
39.7% 237
5.6% 33

SR 100 - AM

89 13.9% | 423 66.5% | 125 19.6%

637

(12000)

Belle Terre Blvd/Pkwy

(XXXXX)	2030 AADT
XXXX	2030 DDHV
K ML =	9.00%
K SS =	9.00%

D Factors
59.0% NB
41.0% SB
61.0% WB
39.0% EB

PROJECT TRAFFIC FOR Belle Terre Blvd/Pkwy AT SR 100 - AM

2015 INPUT TMCs COMPARED TO 2015 DHV

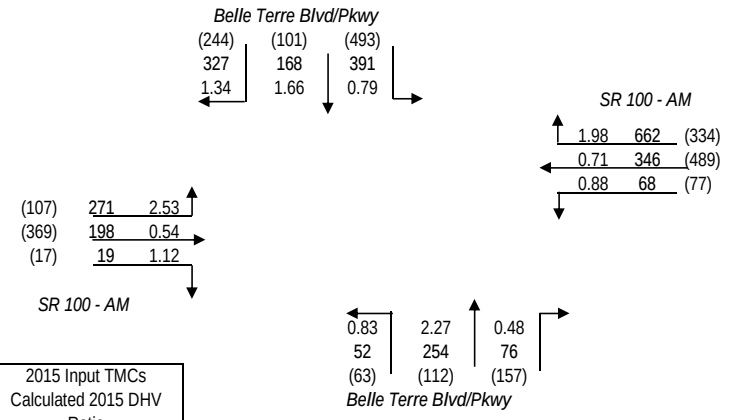

(XXX)	2015 Input TMCs
XXX	Calculated 2015 DHV
X.XX	Ratio

2015 INPUT TMCs COMPARED TO 2020 DHV

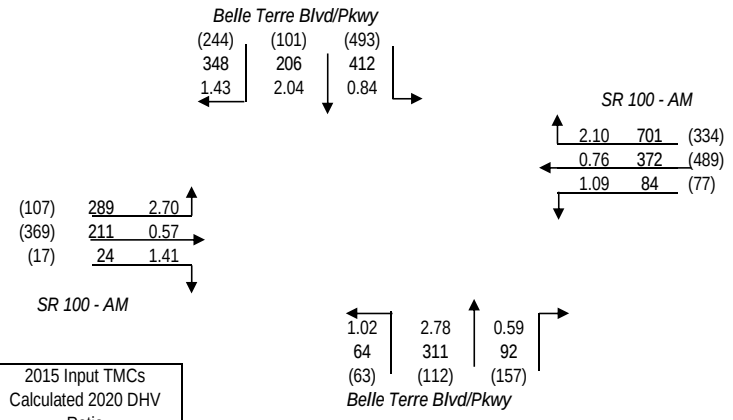

(XXX)	2015 Input TMCs
XXX	Calculated 2020 DHV
X.XX	Ratio

2015 INPUT TMCs COMPARED TO 2025 DHV

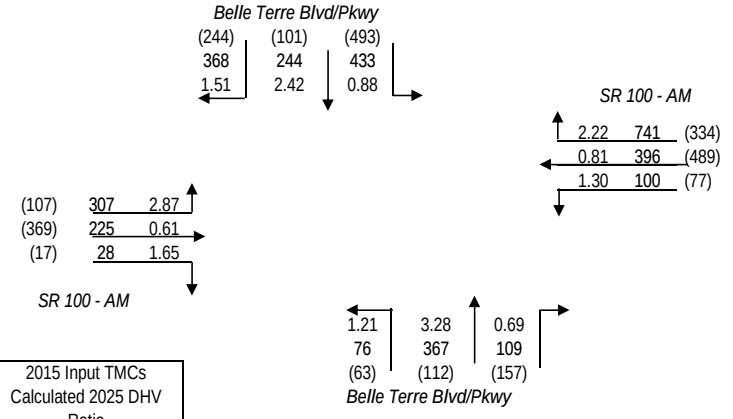

(XXX)	2015 Input TMCs
XXX	Calculated 2025 DHV
X.XX	Ratio

2015 INPUT TMCs COMPARED TO 2030 DHV

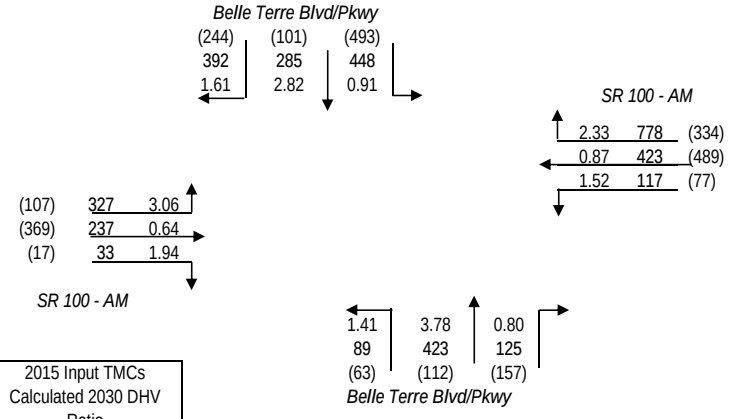

(XXX)	2015 Input TMCs
XXX	Calculated 2030 DHV
X.XX	Ratio

TURNS5 ANALYSIS SHEET - INPUT

Analyst:	-
Date:	12-Nov-15
Highway:	Belle Terre Pkwy
Intersection:	Eastwood Dr - AM
Project:	Belle Terre Blvd/Pkwy Intersection Analysis
County:	Flagler

Is this a 4 way intersection?

- ○ Yes, my intersection has four approaches

If not, which 3 approaches exist in the intersection?

- ○ EB, WB, and SB
- ○ EB, WB, and NB
- ◉ EB, SB, and NB
- ○ WB, SB, and NB

Is the Mainline Oriented North/South? (Enter Yes or No)

- ◉ Yes
- ○ No

K Factors	Mainline	**D Factors**	*Mainline*
	9.00%	Northbound (NB)	41.0%
	Side street	Southbound (SB)	59.0%
	9.00%		*Side street*
		Westbound (WB)	0.0%
		Eastbound (EB)	61.0%

Do you have FTSUTMS Model Year traffic from which you would like to interpolate/extrapolate for project years? (Y/N) (Enter Yes or No)

- ◉ Yes
- ○ No

If "Yes" go to cell C47 If "No" go to cell C31

Enter Year and Growth Rates from Base Year:

	Year	*Rate* (1.0% = 0.01) Mainline	Side Street
Base	2015	0.00%	0.00%
Opening	2025		
Mid	2035		
Design	2045		

Mainline Growth Function

- ◉ Linear
- ○ Exponential
- ○ Decaying

Side Street Growth Function

- ◉ Linear
- ○ Exponential
- ○ Decaying

Enter Base Year AADTs for Volume Comparison:
(growth rates are used to calculate other project years)

From West: EB Approach	*From East: WB Approach*	*From North: SB Approach*	*From South: NB Approach*	***TOTAL***
0	0	0	0	0

Enter Project and Model Years

	Year
Base	2015
Opening	2020
Mid	2025
Design	2030
Model	2030

Enter Base and Model Year AADTs for Volume Comparison:
(volumes for other project years are calculated by interpolation)

	From West: EB Approach	*From East: WB Approach*	*From North: SB Approach*	*From South: NB Approach*	***TOTAL***
2015	767	0	24000	24000	48767
2030	990	0	31000	30500	62490

		1st Guess Turning %'s for AADT Balancing	**Actual/Counted Traffic for 2015**
(EB LT)	*West-to-North*	16.7%	5
(EB THRU)	*West-to-East*	0.0%	0
(EB RT)	*West-to-South*	83.3%	25
(WB LT)	*East-to-South*	0.0%	0
(WB THRU)	*East-to-West*	0.0%	0
(WB RT)	*East-to-North*	0.0%	0
(SB LT)	*North-to-East*	0.0%	0
(SB THRU)	*North-to-South*	99.7%	992
(SB RT)	*North-to-West*	0.3%	3
(NB LT)	*South-to-West*	2.9%	16
(NB THRU)	*South-to-North*	97.1%	537
(NB RT)	*South-to-East*	0.0%	0

Desired Closure: 1.00

Existing Year AADTs

Existing Turning Movement Counts

FSUTMS Model Year AADTs

First Guess Turning % Option Used
Existing Turning Movement Counts

Only the existing year total departure volumes [AADT*K*(1-D)] will be used to calculate the turning percentages first guess.

The turning percentages first guess is the same as the ***actual distribution of turning volumes entered***. No balancing technique is used.

Only the FSUTMS model year departure volumes [AADT*K*(1-D)] will be used to calculate the turning percentages first guess.

PROJECT TRAFFIC FOR Belle Terre Pkwy AT Eastwood Dr - AM

DESIGN HOUR TURNING MOVEMENTS IN YEAR 2015

Belle Terre Pkwy
(24000)
1274

0.3% 4 | 99.7% 1270 | 0.0% 0

Eastwood Dr - AM
0 0.0%
0 0.0% 0 0
0 0.0%

(770) 42
17.3% 7
0.0% 0
82.7% 35

Eastwood Dr - AM

23 | 863 | 0
2.6% | 97.4% | 0.0%
886
(24000)
Belle Terre Pkwy

(XXXXX)	2015 AADT
XXXX	2015 DDHV
K ML =	9.00%
K SS =	9.00%

D Factors
41.0% NB
59.0% SB
61.0% EB

DESIGN HOUR TURNING MOVEMENTS IN YEAR 2020

Belle Terre Pkwy
(26000)
1398

0.3% 4 | 99.7% 1394 | 0.0% 0

Eastwood Dr - AM
0 0.0%
0 0.0% 0 0
0 0.0%

(840) 46
17.5% 8
0.0% 0
82.5% 38

Eastwood Dr - AM

25 | 941 | 0
2.6% | 97.4% | 0.0%
966
(26000)
Belle Terre Pkwy

(XXXXX)	2020 AADT
XXXX	2020 DDHV
K ML =	9.00%
K SS =	9.00%

D Factors
41.0% NB
59.0% SB
61.0% EB

DESIGN HOUR TURNING MOVEMENTS IN YEAR 2025

Belle Terre Pkwy
(29000)
1522

0.3% 5 | 99.7% 1517 | 0.0% 0

Eastwood Dr - AM
0 0.0%
0 0.0% 0 0
0 0.0%

(920) 50
17.7% 9
0.0% 0
82.3% 41

Eastwood Dr - AM

27 | 1018 | 0
2.6% | 97.4% | 0.0%
1045
(28000)
Belle Terre Pkwy

(XXXXX)	2025 AADT
XXXX	2025 DDHV
K ML =	9.00%
K SS =	9.00%

D Factors
41.0% NB
59.0% SB
61.0% EB

DESIGN HOUR TURNING MOVEMENTS IN YEAR 2030

Belle Terre Pkwy
(31000)
1646

0.3% 5 | 99.7% 1641 | 0.0% 0

Eastwood Dr - AM
0 0.0%
0 0.0% 0 0
0 0.0%

(990) 54
17.8% 10
0.0% 0
82.2% 44

Eastwood Dr - AM

29 | 1096 | 0
2.6% | 97.4% | 0.0%
1125
(31000)
Belle Terre Pkwy

(XXXXX)	2030 AADT
XXXX	2030 DDHV
K ML =	9.00%
K SS =	9.00%

D Factors
41.0% NB
59.0% SB
61.0% EB

PROJECT TRAFFIC FOR Belle Terre Pkwy AT Eastwood Dr - AM

2015 INPUT TMCs COMPARED TO 2015 DHV

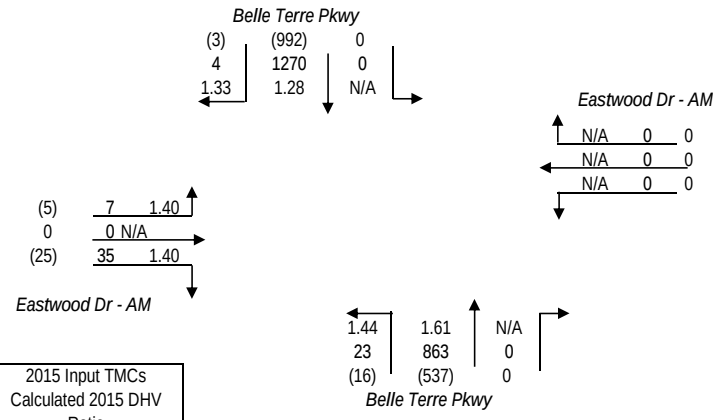

(XXX)	2015 Input TMCs
XXX	Calculated 2015 DHV
X.XX	Ratio

2015 INPUT TMCs COMPARED TO 2020 DHV

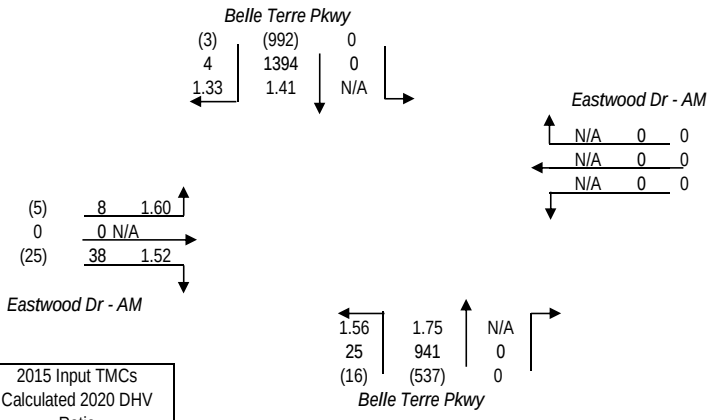

(XXX)	2015 Input TMCs
XXX	Calculated 2020 DHV
X.XX	Ratio

2015 INPUT TMCs COMPARED TO 2025 DHV

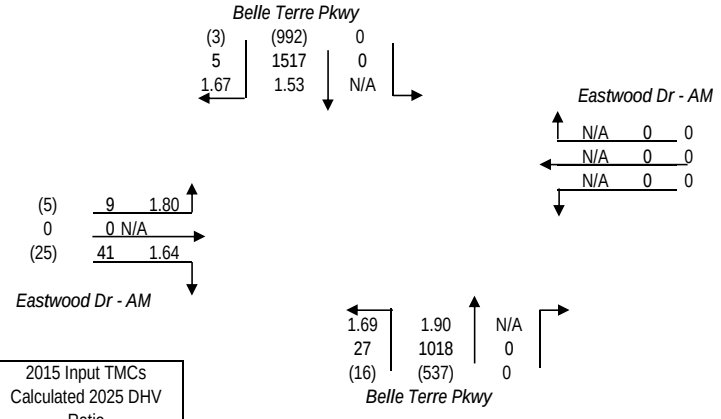

(XXX)	2015 Input TMCs
XXX	Calculated 2025 DHV
X.XX	Ratio

2015 INPUT TMCs COMPARED TO 2030 DHV

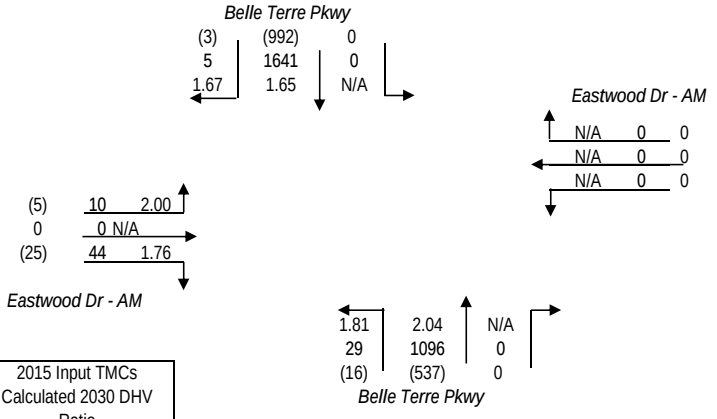

(XXX)	2015 Input TMCs
XXX	Calculated 2030 DHV
X.XX	Ratio

TURNS5 ANALYSIS SHEET - INPUT

Analyst:	-
Date:	13-Nov-15
Highway:	Belle Terre Pkwy
Intersection:	Eastwood Dr/Market Ave - AM
Project:	Belle Terre Blvd/Pkwy Intersection Analysis
County:	Flagler

Is this a 4 way intersection?

- (●) Yes, my intersection has four approaches

If not, which 3 approaches exist in the intersection?

- ( ) EB, WB, and SB
- ( ) EB, WB, and NB
- ( ) EB, SB, and NB
- ( ) WB, SB, and NB

Is the Mainline Oriented North/South? Enter Yes or No: (●) Yes ( ) No

K Factors	
Mainline	9.00%
Side street	9.00%

D Factors	*Mainline*
Northbound (NB)	41.0%
Southbound (SB)	59.0%
	Side street
Westbound (WB)	39.0%
Eastbound (EB)	61.0%

Do you have FTSUTMS Model Year traffic from which you would like to interpolate/extrapolate for project years? (Y/N)

Enter Yes or No: (●) Yes ( ) No

If "Yes" go to cell C47 — If "No" go to cell C31

Enter Year and Growth Rates from Base Year:

	Year	*Rate* (1.0% = 0.01) Mainline	Side Street
Base	2015	0.00%	0.00%
Opening	2025		
Mid	2035		
Design	2045		

Mainline Growth Function: (●) Linear ( ) Exponential ( ) Decaying

Side Street Growth Function: (●) Linear ( ) Exponential ( ) Decaying

Enter Base Year AADTs for Volume Comparison:
(growth rates are used to calculate other project years)

From West: EB Approach	*From East: WB Approach*	*From North: SB Approach*	*From South: NB Approach*	***TOTAL***
0	0	0	0	0

Enter Project and Model Years

	Year
Base	2015
Opening	2020
Mid	2025
Design	2030
Model	2030

Enter Base and Model Year AADTs for Volume Comparison:
(volumes for other project years are calculated by interpolation)

	From West: EB Approach	*From East: WB Approach*	*From North: SB Approach*	*From South: NB Approach*	***TOTAL***
2015	478	1622	24000	24000	50100
2030	610	2100	31000	31000	64710

First Guess Turning % Option Used
Existing Turning Movement Counts

		1st Guess Turning %'s for AADT Balancing	**Actual/Counted Traffic for 2015**
(EB LT)	*West-to-North*	69.6%	16
(EB THRU)	*West-to-East*	13.0%	3
(EB RT)	*West-to-South*	17.4%	4
(WB LT)	*East-to-South*	71.4%	25
(WB THRU)	*East-to-West*	5.7%	2
(WB RT)	*East-to-North*	22.9%	8
(SB LT)	*North-to-East*	2.5%	25
(SB THRU)	*North-to-South*	96.5%	966
(SB RT)	*North-to-West*	1.0%	10
(NB LT)	*South-to-West*	0.4%	2
(NB THRU)	*South-to-North*	93.3%	506
(NB RT)	*South-to-East*	6.3%	34

Desired Closure: 1.00

Existing Year AADTs — Only the existing year total departure volumes [AADT*K*(1-D)] will be used to calculate the turning percentages first guess.

Existing Turning Movement Counts — The turning percentages first guess is the same as the ***actual distribution of turning volumes entered***. No balancing technique is used.

FSUTMS Model Year AADTs — Only the FSUTMS model year departure volumes [AADT*K*(1-D)] will be used to calculate the turning percentages first guess.

PROJECT TRAFFIC FOR Belle Terre Pkwy AT Eastwood Dr/Market Ave - AM

DESIGN HOUR TURNING MOVEMENTS IN YEAR 2015

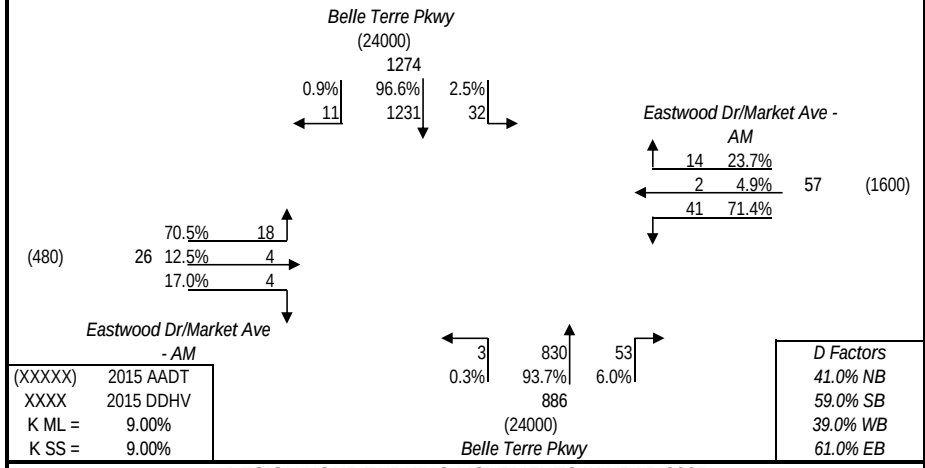

DESIGN HOUR TURNING MOVEMENTS IN YEAR 2020

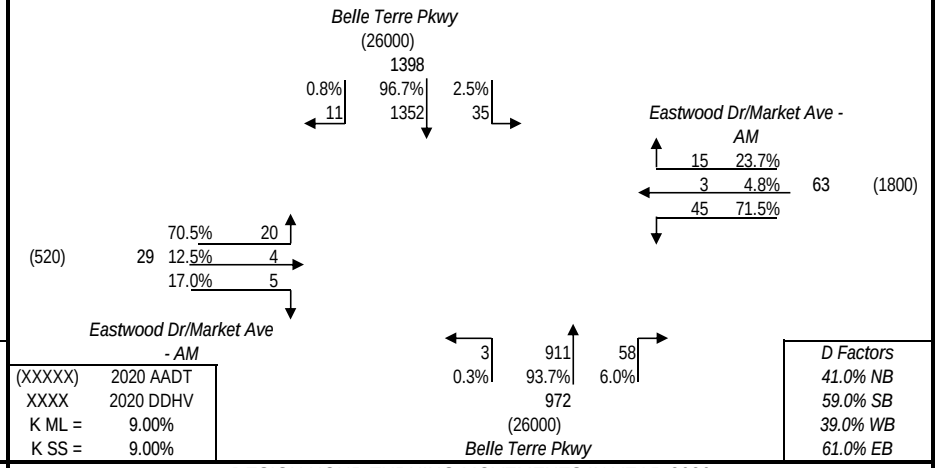

DESIGN HOUR TURNING MOVEMENTS IN YEAR 2025

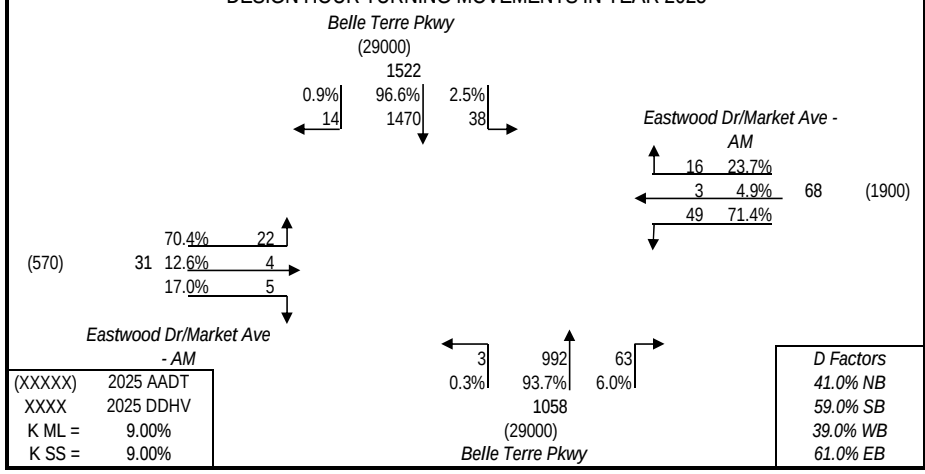

DESIGN HOUR TURNING MOVEMENTS IN YEAR 2030

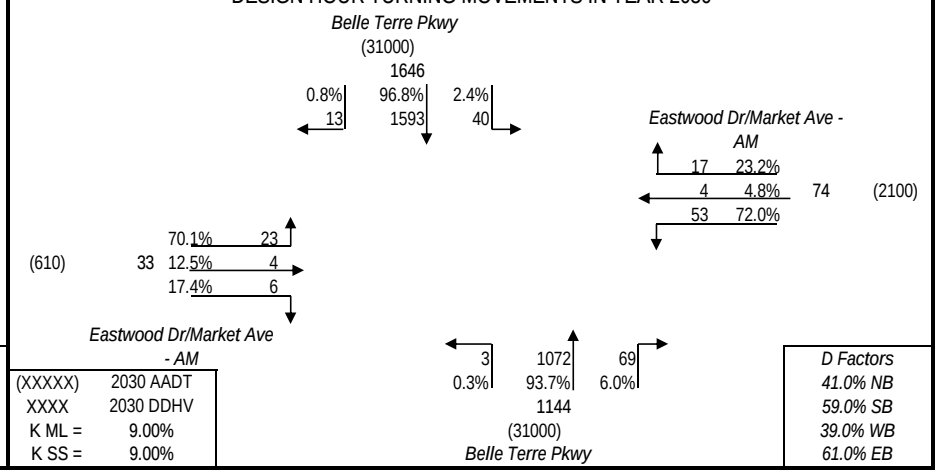

PROJECT TRAFFIC FOR Belle Terre Pkwy AT Eastwood Dr/Market Ave - AM

2015 INPUT TMCs COMPARED TO 2015 DHV

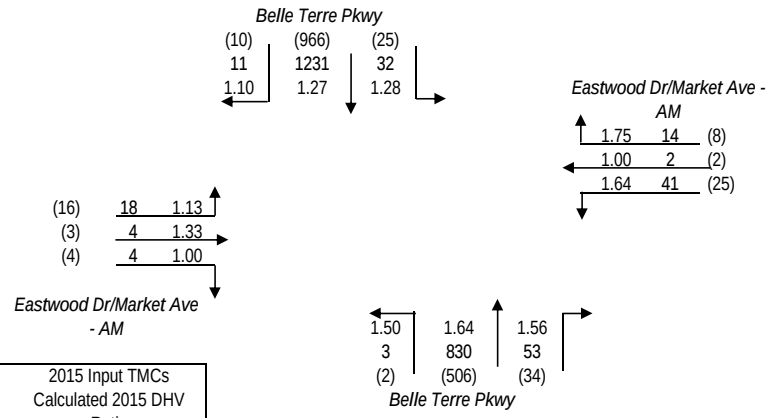

(XXX)	2015 Input TMCs
XXX	Calculated 2015 DHV
X.XX	Ratio

2015 INPUT TMCs COMPARED TO 2020 DHV

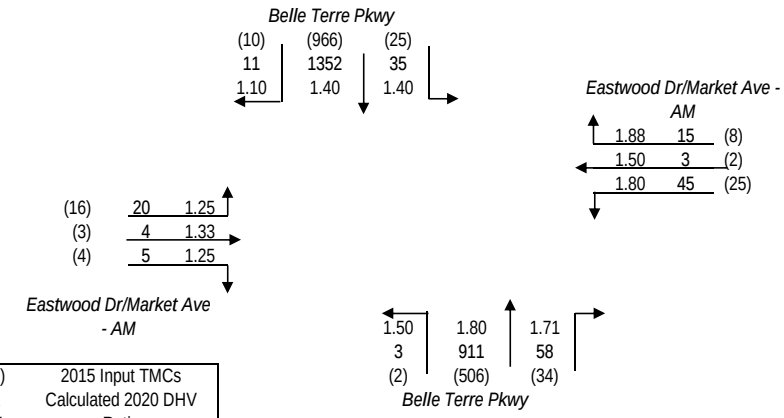

(XXX)	2015 Input TMCs
XXX	Calculated 2020 DHV
X.XX	Ratio

2015 INPUT TMCs COMPARED TO 2025 DHV

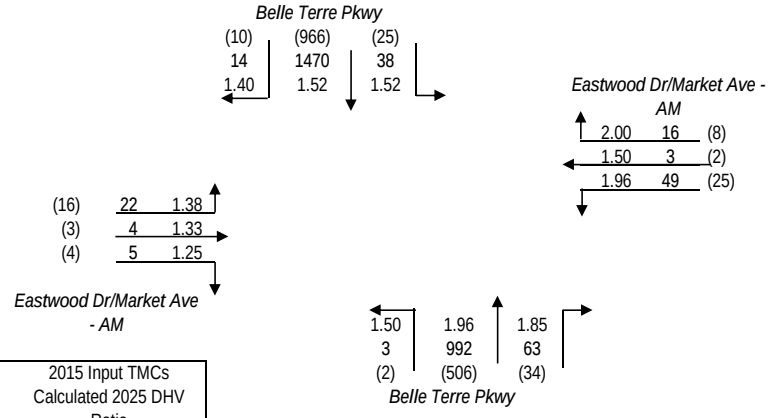

(XXX)	2015 Input TMCs
XXX	Calculated 2025 DHV
X.XX	Ratio

2015 INPUT TMCs COMPARED TO 2030 DHV

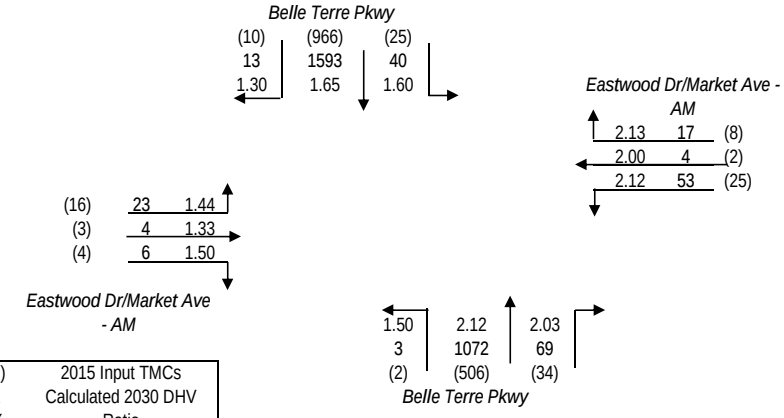

(XXX)	2015 Input TMCs
XXX	Calculated 2030 DHV
X.XX	Ratio

TURNS5 ANALYSIS SHEET - INPUT

Analyst:	-
Date:	13-Nov-15
Highway:	Belle Terre Pkwy
Intersection:	Easthampton Blvd/Central Ave - AM
Project:	Belle Terre Blvd/Pkwy Intersection Analysis
County:	Flagler

Is this a 4 way intersection?

- (●) Yes, my intersection has four approaches

If not, which 3 approaches exist in the intersection?

- ( ) EB, WB, and SB
- ( ) EB, WB, and NB
- ( ) EB, SB, and NB
- ( ) WB, SB, and NB

Is the Mainline Oriented North/South? Enter Yes or No: (●) Yes ( ) No

K Factors	
Mainline	9.00%
Side street	9.00%

D Factors	*Mainline*
Northbound (NB)	41.0%
Southbound (SB)	59.0%
	Side street
Westbound (WB)	61.0%
Eastbound (EB)	39.0%

Do you have FTSUTMS Model Year traffic from which you would like to interpolate/extrapolate for project years? (Y/N)

Enter Yes or No: (●) Yes ( ) No

If "Yes" go to cell C47 — If "No" go to cell C31

Enter Year and Growth Rates from Base Year:

	Year	*Rate* (1.0% = 0.01) Mainline	Side Street
Base	2015	0.00%	0.00%
Opening	2025		
Mid	2035		
Design	2045		

Mainline Growth Function: (●) Linear ( ) Exponential ( ) Decaying

Side Street Growth Function: (●) Linear ( ) Exponential ( ) Decaying

Enter Base Year AADTs for Volume Comparison:
(growth rates are used to calculate other project years)

From West: EB Approach	*From East: WB Approach*	*From North: SB Approach*	*From South: NB Approach*	***TOTAL***
0	0	0	0	0

Enter Project and Model Years

	Year
Base	2015
Opening	2020
Mid	2025
Design	2030
Model	2030

Enter Base and Model Year AADTs for Volume Comparison:
(volumes for other project years are calculated by interpolation)

	From West: EB Approach	*From East: WB Approach*	*From North: SB Approach*	*From South: NB Approach*	***TOTAL***
2015	5500	5800	27000	24000	62300
2030	8600	9000	35000	31000	83600

First Guess Turning % Option Used
Existing Turning Movement Counts

		1st Guess Turning %'s for AADT Balancing	**Actual/Counted Traffic for 2015**	
(EB LT)	*West-to-North*	41.9%	144	Existing Year AADTs
(EB THRU)	*West-to-East*	13.9%	48	
(EB RT)	*West-to-South*	44.2%	152	
(WB LT)	*East-to-South*	8.8%	11	Existing Turning Movement Counts
(WB THRU)	*East-to-West*	16.0%	20	
(WB RT)	*East-to-North*	75.2%	94	
(SB LT)	*North-to-East*	16.8%	181	
(SB THRU)	*North-to-South*	77.6%	838	
(SB RT)	*North-to-West*	5.6%	61	
(NB LT)	*South-to-West*	10.6%	56	FSUTMS Model Year AADTs
(NB THRU)	*South-to-North*	88.8%	471	
(NB RT)	*South-to-East*	0.6%	3	
Desired Closure:		1.00		

Only the existing year total departure volumes [AADT*K*(1-D)] will be used to calculate the turning percentages first guess.

The turning percentages first guess is the same as the ***actual distribution of turning volumes entered***. No balancing technique is used.

Only the FSUTMS model year departure volumes [AADT*K*(1-D)] will be used to calculate the turning percentages first guess.

PROJECT TRAFFIC FOR Belle Terre Pkwy AT Easthampton Blvd/Central Ave - AM

DESIGN HOUR TURNING MOVEMENTS IN YEAR 2015

Belle Terre Pkwy
(27000)
1434

7.5% 108 | 80.0% 1147 | 12.5% 179

Easthampton Blvd/Central Ave - AM
219 68.9%
69 21.8% 318 (5800)
30 9.3%

(5500) 193
40.1% 77
11.1% 22
48.8% 94

Easthampton Blvd/Central Ave - AM

133 15.0% | 749 84.5% | 4 0.5%

886
(24000)
Belle Terre Pkwy

(XXXXX)	2015 AADT
XXXX	2015 DDHV
K ML =	9.00%
K SS =	9.00%

D Factors
41.0% NB
59.0% SB
61.0% WB
39.0% EB

DESIGN HOUR TURNING MOVEMENTS IN YEAR 2020

Belle Terre Pkwy
(30000)
1575

7.9% 124 | 78.9% 1243 | 13.2% 208

Easthampton Blvd/Central Ave - AM
254 67.5%
88 23.3% 377 (6900)
35 9.2%

(6500) 229
39.5% 90
11.8% 27
48.7% 112

Easthampton Blvd/Central Ave - AM

156 16.1% | 811 83.4% | 5 0.5%

972
(26000)
Belle Terre Pkwy

(XXXXX)	2020 AADT
XXXX	2020 DDHV
K ML =	9.00%
K SS =	9.00%

D Factors
41.0% NB
59.0% SB
61.0% WB
39.0% EB

DESIGN HOUR TURNING MOVEMENTS IN YEAR 2025

Belle Terre Pkwy
(32000)
1717

7.9% 136 | 78.3% 1344 | 13.8% 237

Easthampton Blvd/Central Ave - AM
286 65.5%
108 24.8% 436 (7900)
42 9.7%

(7600) 266
37.3% 99
12.8% 34
49.9% 133

Easthampton Blvd/Central Ave - AM

184 17.4% | 868 82.0% | 6 0.6%

1058
(29000)
Belle Terre Pkwy

(XXXXX)	2025 AADT
XXXX	2025 DDHV
K ML =	9.00%
K SS =	9.00%

D Factors
41.0% NB
59.0% SB
61.0% WB
39.0% EB

DESIGN HOUR TURNING MOVEMENTS IN YEAR 2030

Belle Terre Pkwy
(35000)
1859

8.2% 152 | 77.4% 1439 | 14.4% 268

Easthampton Blvd/Central Ave - AM
319 64.5%
127 25.8% 494 (9000)
48 9.7%

(8600) 302
36.8% 111
13.4% 41
49.8% 150

Easthampton Blvd/Central Ave - AM

208 18.2% | 929 81.2% | 7 0.6%

1144
(31000)
Belle Terre Pkwy

(XXXXX)	2030 AADT
XXXX	2030 DDHV
K ML =	9.00%
K SS =	9.00%

D Factors
41.0% NB
59.0% SB
61.0% WB
39.0% EB

PROJECT TRAFFIC FOR Belle Terre Pkwy AT Easthampton Blvd/Central Ave - AM

2015 INPUT TMCs COMPARED TO 2015 DHV

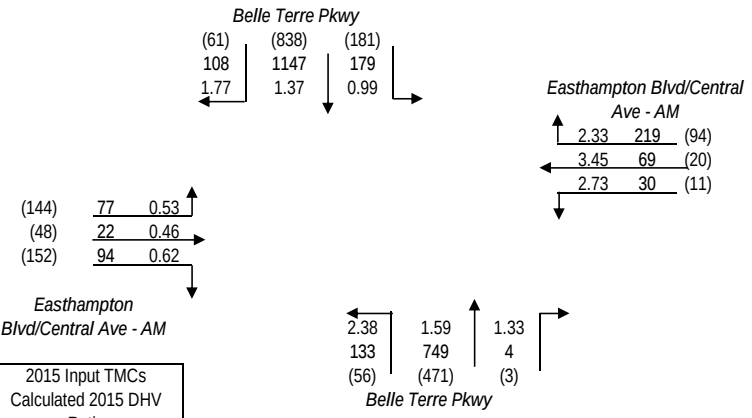

(XXX)	2015 Input TMCs
XXX	Calculated 2015 DHV
X.XX	Ratio

2015 INPUT TMCs COMPARED TO 2020 DHV

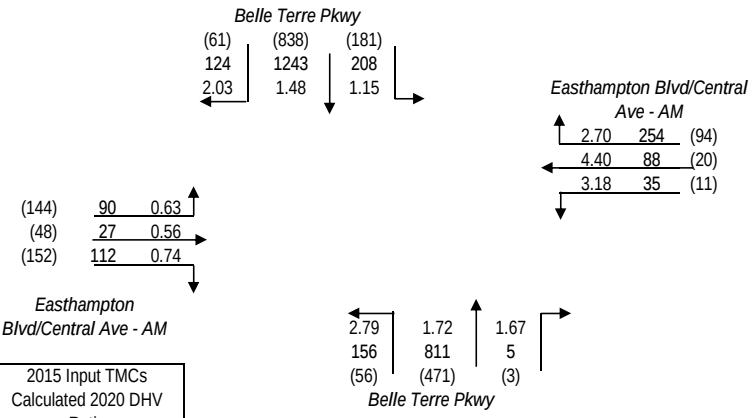

(XXX)	2015 Input TMCs
XXX	Calculated 2020 DHV
X.XX	Ratio

2015 INPUT TMCs COMPARED TO 2025 DHV

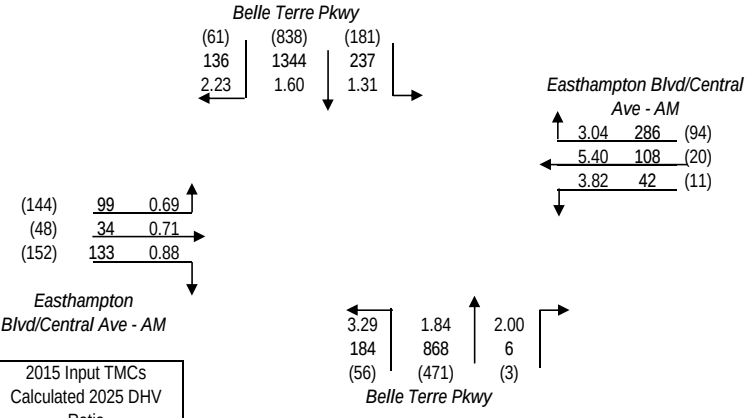

(XXX)	2015 Input TMCs
XXX	Calculated 2025 DHV
X.XX	Ratio

2015 INPUT TMCs COMPARED TO 2030 DHV

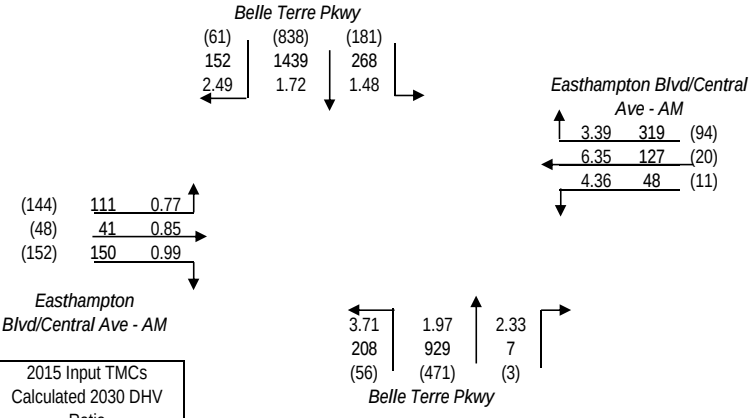

(XXX)	2015 Input TMCs
XXX	Calculated 2030 DHV
X.XX	Ratio

TURNS5 ANALYSIS SHEET - INPUT

Analyst:	-
Date:	13-Nov-15
Highway:	Belle Terre Pkwy
Intersection:	Royal Palms Pkwy - AM
Project:	Belle Terre Blvd/Pkwy Intersection Analysis
County:	Flagler

Is this a 4 way intersection?

- (●) Yes, my intersection has four approaches

If not, which 3 approaches exist in the intersection?

- ( ) EB, WB, and SB
- ( ) EB, WB, and NB
- ( ) EB, SB, and NB
- ( ) WB, SB, and NB

Is the Mainline Oriented North/South? Enter Yes or No: (●) Yes ( ) No

K Factors	Mainline	**D Factors**	*Mainline*
	9.00%	Northbound (NB)	41.0%
	Side street	Southbound (SB)	59.0%
	9.00%		*Side street*
		Westbound (WB)	61.0%
		Eastbound (EB)	39.0%

Do you have FTSUTMS Model Year traffic from which you would like to interpolate/extrapolate for project years? (Y/N)

Enter Yes or No: (●) Yes ( ) No

If "Yes" go to cell C47 — If "No" go to cell C31

Enter Year and Growth Rates from Base Year:

	Year	*Rate* (1.0% = 0.01) Mainline	Side Street
Base	2015	0.00%	0.00%
Opening	2025		
Mid	2035		
Design	2045		

Mainline Growth Function: (●) Linear ( ) Exponential ( ) Decaying

Side Street Growth Function: (●) Linear ( ) Exponential ( ) Decaying

Enter Base Year AADTs for Volume Comparison:
(growth rates are used to calculate other project years)

From West: EB Approach	*From East: WB Approach*	*From North: SB Approach*	*From South: NB Approach*	***TOTAL***
0	0	0	0	0

Enter Project and Model Years

	Year
Base	2015
Opening	2020
Mid	2025
Design	2030
Model	2030

Enter Base and Model Year AADTs for Volume Comparison:
(volumes for other project years are calculated by interpolation)

	From West: EB Approach	*From East: WB Approach*	*From North: SB Approach*	*From South: NB Approach*	***TOTAL***
2015	4500	5400	26000	27000	62900
2030	8700	16000	36000	35000	95700

First Guess Turning % Option Used
Existing Turning Movement Counts

		1st Guess Turning %'s for AADT Balancing	**Actual/Counted Traffic for 2015**
(EB LT)	*West-to-North*	9.5%	25
(EB THRU)	*West-to-East*	35.9%	94
(EB RT)	*West-to-South*	54.6%	143
(WB LT)	*East-to-South*	24.5%	79
(WB THRU)	*East-to-West*	28.0%	90
(WB RT)	*East-to-North*	47.5%	153
(SB LT)	*North-to-East*	28.5%	360
(SB THRU)	*North-to-South*	67.9%	858
(SB RT)	*North-to-West*	3.6%	45
(NB LT)	*South-to-West*	17.1%	121
(NB THRU)	*South-to-North*	75.1%	533
(NB RT)	*South-to-East*	7.8%	55

Desired Closure: 1.00

Existing Year AADTs — Only the existing year total departure volumes [AADT*K*(1-D)] will be used to calculate the turning percentages first guess.

Existing Turning Movement Counts — The turning percentages first guess is the same as the ***actual distribution of turning volumes entered***. No balancing technique is used.

FSUTMS Model Year AADTs — Only the FSUTMS model year departure volumes [AADT*K*(1-D)] will be used to calculate the turning percentages first guess.

PROJECT TRAFFIC FOR Belle Terre Pkwy AT Royal Palms Pkwy - AM

DESIGN HOUR TURNING MOVEMENTS IN YEAR 2015

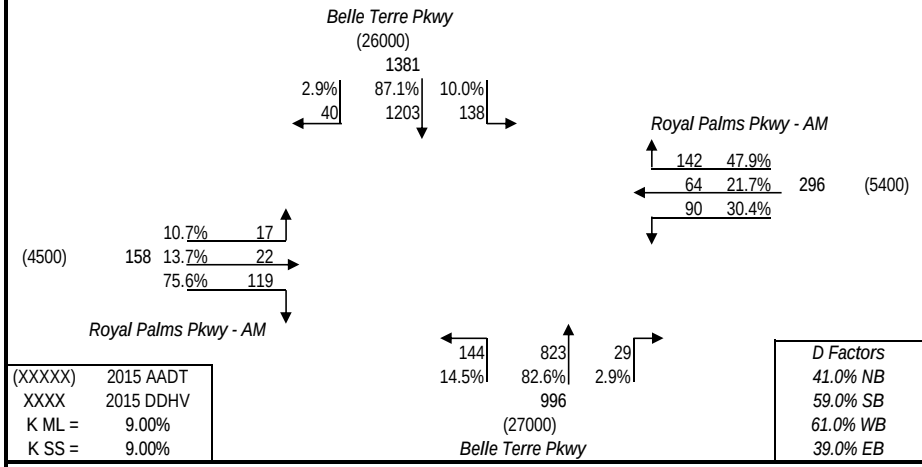

(XXXXX)	2015 AADT	
XXXX	2015 DDHV	
K ML =	9.00%	
K SS =	9.00%	

D Factors
41.0% NB
59.0% SB
61.0% WB
39.0% EB

DESIGN HOUR TURNING MOVEMENTS IN YEAR 2020

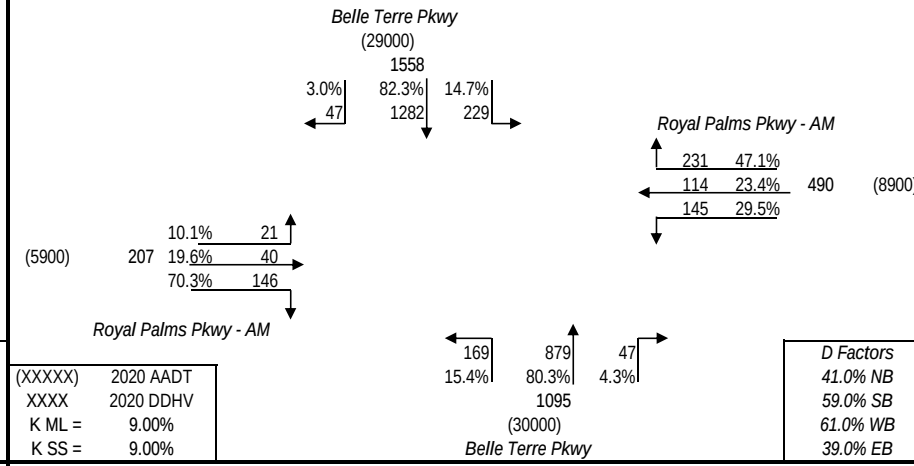

(XXXXX)	2020 AADT	
XXXX	2020 DDHV	
K ML =	9.00%	
K SS =	9.00%	

D Factors
41.0% NB
59.0% SB
61.0% WB
39.0% EB

DESIGN HOUR TURNING MOVEMENTS IN YEAR 2025

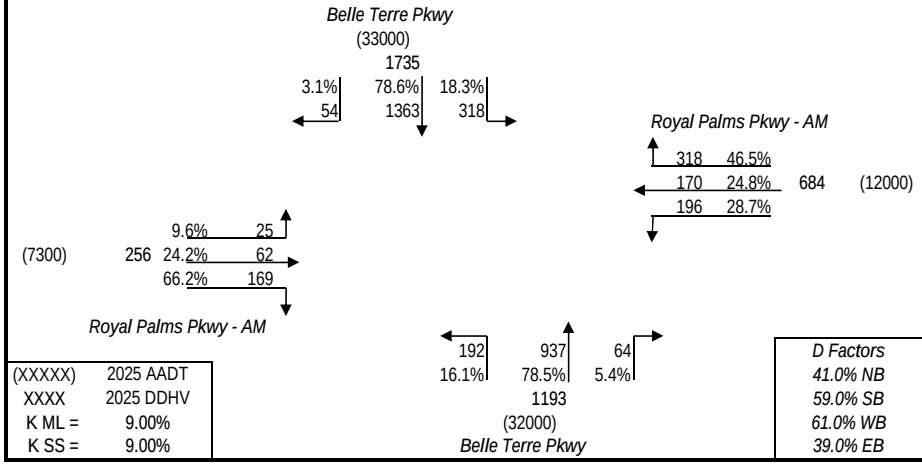

(XXXXX)	2025 AADT	
XXXX	2025 DDHV	
K ML =	9.00%	
K SS =	9.00%	

D Factors
41.0% NB
59.0% SB
61.0% WB
39.0% EB

DESIGN HOUR TURNING MOVEMENTS IN YEAR 2030

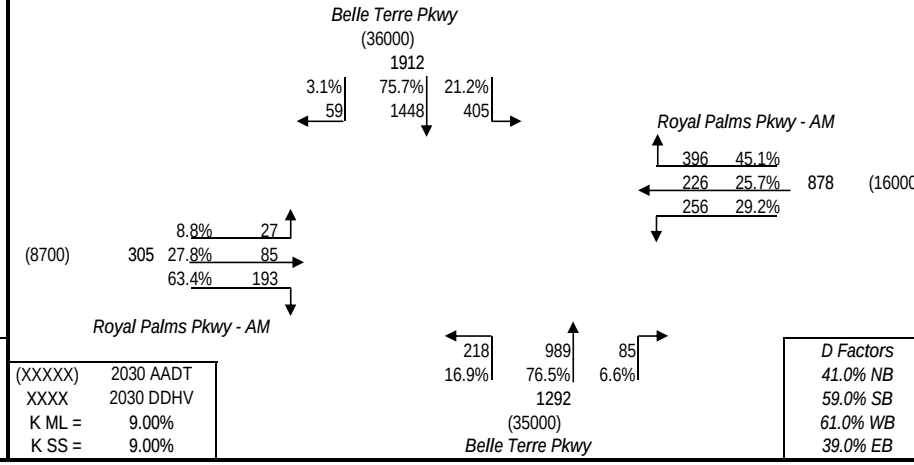

(XXXXX)	2030 AADT	
XXXX	2030 DDHV	
K ML =	9.00%	
K SS =	9.00%	

D Factors
41.0% NB
59.0% SB
61.0% WB
39.0% EB

PROJECT TRAFFIC FOR Belle Terre Pkwy AT Royal Palms Pkwy - AM

2015 INPUT TMCs COMPARED TO 2015 DHV

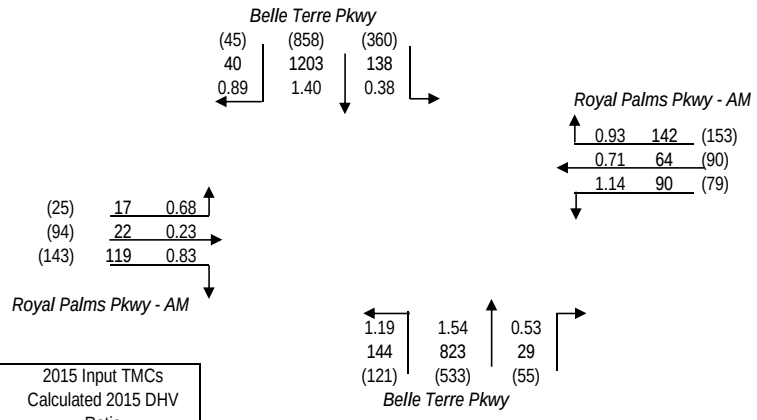

2015 INPUT TMCs COMPARED TO 2020 DHV

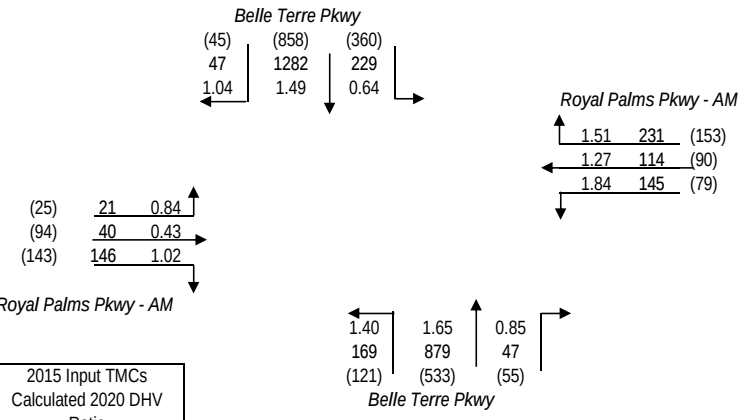

2015 INPUT TMCs COMPARED TO 2025 DHV

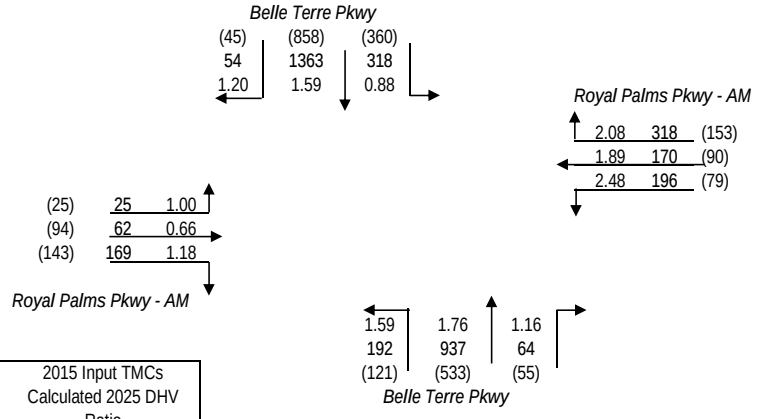

2015 INPUT TMCs COMPARED TO 2030 DHV

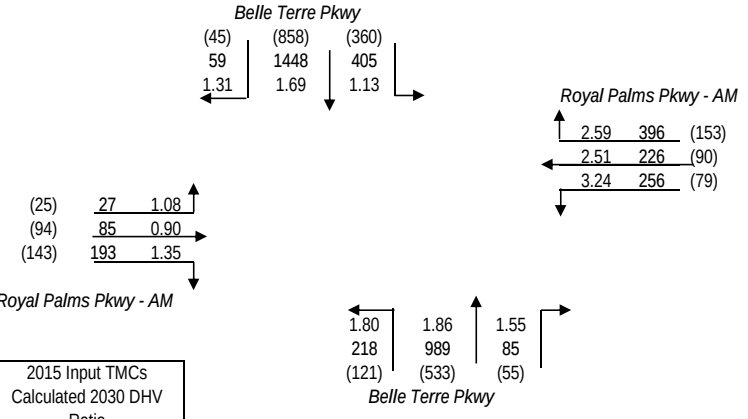

TURNS5 ANALYSIS SHEET - INPUT

Analyst:	-
Date:	13-Nov-15
Highway:	Belle Terre Pkwy
Intersection:	Point Pleasant Dr - AM
Project:	Belle Terre Blvd/Pkwy Intersection Analysis
County:	Flagler

Is this a 4 way intersection?

- ○ Yes, my intersection has four approaches

If not, which 3 approaches exist in the intersection?

- ○ EB, WB, and SB
- ○ EB, WB, and NB
- ○ EB, SB, and NB
- ◉ WB, SB, and NB

Is the Mainline Oriented North/South? Enter Yes or No

- ◉ Yes
- ○ No

K Factors	
Mainline	9.00%
Side street	9.00%

D Factors	*Mainline*
Northbound (NB)	41.0%
Southbound (SB)	59.0%
	Side street
Westbound (WB)	61.0%
Eastbound (EB)	0.0%

Do you have FTSUTMS Model Year traffic from which you would like to interpolate/extrapolate for project years? (Y/N)

Enter Yes or No

- ◉ Yes
- ○ No

If "Yes" go to cell C47 — If "No" go to cell C31

Enter Year and Growth Rates from Base Year:

	Year	*Rate* (1.0% = 0.01) Mainline	Side Street
Base	2015	0.00%	0.00%
Opening	2025		
Mid	2035		
Design	2045		

Mainline Growth Function

- ◉ Linear
- ○ Exponential
- ○ Decaying

Side Street Growth Function

- ◉ Linear
- ○ Exponential
- ○ Decaying

Enter Base Year AADTs for Volume Comparison:

(growth rates are used to calculate other project years)

From West: EB Approach	*From East: WB Approach*	*From North: SB Approach*	*From South: NB Approach*	***TOTAL***
0	0	0	0	0

Enter Project and Model Years

	Year
Base	2015
Opening	2020
Mid	2025
Design	2030
Model	2030

Enter Base and Model Year AADTs for Volume Comparison:

(volumes for other project years are calculated by interpolation)

	From West: EB Approach	*From East: WB Approach*	*From North: SB Approach*	*From South: NB Approach*	***TOTAL***
2015	0	1700	26000	26000	53700
2030	0	2200	36000	36000	74200

First Guess Turning % Option Used
Existing Turning Movement Counts

		1st Guess Turning %'s for AADT Balancing	**Actual/Counted Traffic for 2015**
(EB LT)	*West-to-North*	0.0%	0
(EB THRU)	*West-to-East*	0.0%	0
(EB RT)	*West-to-South*	0.0%	0
(WB LT)	*East-to-South*	52.6%	51
(WB THRU)	*East-to-West*	0.0%	0
(WB RT)	*East-to-North*	47.4%	46
(SB LT)	*North-to-East*	1.3%	16
(SB THRU)	*North-to-South*	98.7%	1212
(SB RT)	*North-to-West*	0.0%	0
(NB LT)	*South-to-West*	0.0%	0
(NB THRU)	*South-to-North*	97.3%	692
(NB RT)	*South-to-East*	2.7%	19

Desired Closure: 1.00

Existing Year AADTs

Only the existing year total departure volumes [AADT*K*(1-D)] will be used to calculate the turning percentages first guess.

Existing Turning Movement Counts

The turning percentages first guess is the same as the ***actual distribution of turning volumes entered***. No balancing technique is used.

FSUTMS Model Year AADTs

Only the FSUTMS model year departure volumes [AADT*K*(1-D)] will be used to calculate the turning percentages first guess.

PROJECT TRAFFIC FOR Belle Terre Pkwy AT Point Pleasant Dr - AM

DESIGN HOUR TURNING MOVEMENTS IN YEAR 2015

Belle Terre Pkwy
(26000)
1381

0.0%	98.2%	1.8%
0	1356	25

Point Pleasant Dr - AM

44	47.5%	
0	0.0%	93 (1700)
49	52.5%	

0.0%	0	
0	0.0%	0
0.0%	0	

Point Pleasant Dr - AM

0	924	35
0.0%	96.3%	3.7%

959
(26000)
Belle Terre Pkwy

(XXXXX)	2015 AADT
XXXX	2015 DDHV
K ML =	9.00%
K SS =	9.00%

D Factors
41.0% NB
59.0% SB
61.0% WB

DESIGN HOUR TURNING MOVEMENTS IN YEAR 2020

Belle Terre Pkwy
(29000)
1558

0.0%	98.2%	1.8%
0	1530	28

Point Pleasant Dr - AM

48	47.5%	
0	0.0%	102 (1900)
54	52.5%	

0.0%	0	
0	0.0%	0
0.0%	0	

Point Pleasant Dr - AM

0	1043	39
0.0%	96.4%	3.6%

1082
(29000)
Belle Terre Pkwy

(XXXXX)	2020 AADT
XXXX	2020 DDHV
K ML =	9.00%
K SS =	9.00%

D Factors
41.0% NB
59.0% SB
61.0% WB

DESIGN HOUR TURNING MOVEMENTS IN YEAR 2025

Belle Terre Pkwy
(33000)
1735

0.0%	98.3%	1.7%
0	1706	29

Point Pleasant Dr - AM

53	47.5%	
0	0.0%	112 (2000)
59	52.5%	

0.0%	0	
0	0.0%	0
0.0%	0	

Point Pleasant Dr - AM

0	1163	42
0.0%	96.5%	3.5%

1205
(33000)
Belle Terre Pkwy

(XXXXX)	2025 AADT
XXXX	2025 DDHV
K ML =	9.00%
K SS =	9.00%

D Factors
41.0% NB
59.0% SB
61.0% WB

DESIGN HOUR TURNING MOVEMENTS IN YEAR 2030

Belle Terre Pkwy
(36000)
1912

0.0%	98.3%	1.7%
0	1879	33

Point Pleasant Dr - AM

57	47.5%	
0	0.0%	121 (2200)
64	52.5%	

0.0%	0	
0	0.0%	0
0.0%	0	

Point Pleasant Dr - AM

0	1282	46
0.0%	96.5%	3.5%

1328
(36000)
Belle Terre Pkwy

(XXXXX)	2030 AADT
XXXX	2030 DDHV
K ML =	9.00%
K SS =	9.00%

D Factors
41.0% NB
59.0% SB
61.0% WB

PROJECT TRAFFIC FOR Belle Terre Pkwy AT Point Pleasant Dr - AM

2015 INPUT TMCs COMPARED TO 2015 DHV

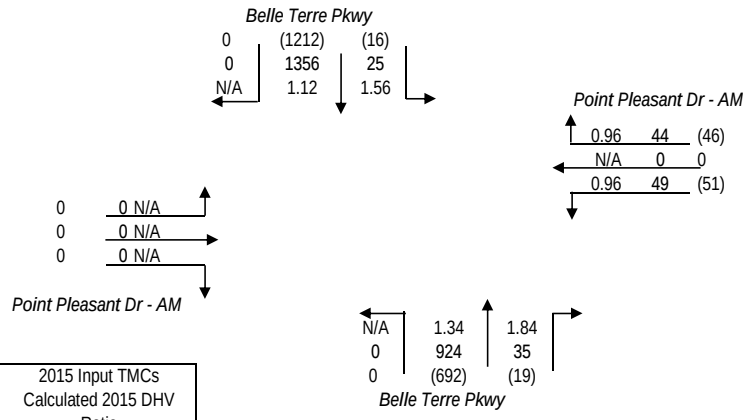

(XXX)	2015 Input TMCs
XXX	Calculated 2015 DHV
X.XX	Ratio

2015 INPUT TMCs COMPARED TO 2020 DHV

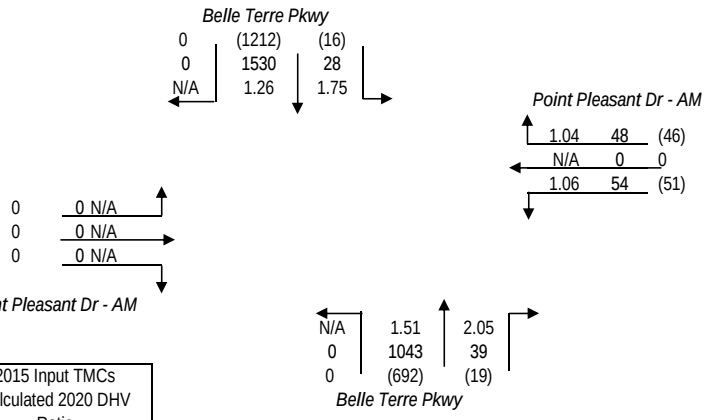

(XXX)	2015 Input TMCs
XXX	Calculated 2020 DHV
X.XX	Ratio

2015 INPUT TMCs COMPARED TO 2025 DHV

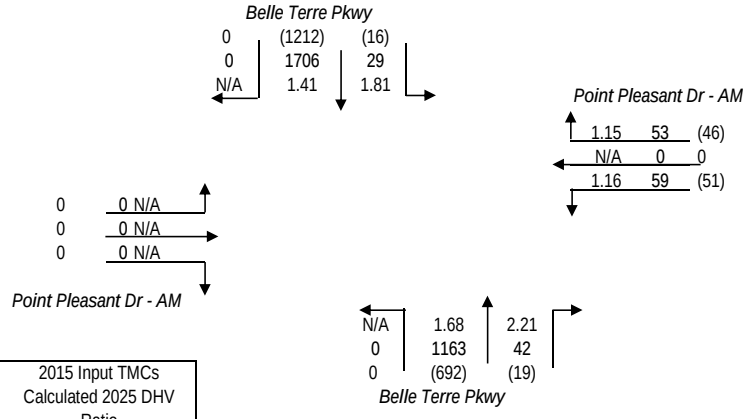

(XXX)	2015 Input TMCs
XXX	Calculated 2025 DHV
X.XX	Ratio

2015 INPUT TMCs COMPARED TO 2030 DHV

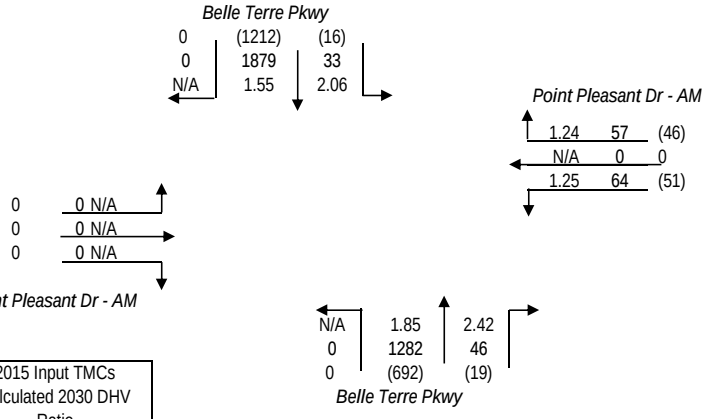

(XXX)	2015 Input TMCs
XXX	Calculated 2030 DHV
X.XX	Ratio

TURNS5 ANALYSIS SHEET - INPUT

Analyst:	-
Date:	13-Nov-15
Highway:	Belle Terre Pkwy
Intersection:	Rymfire Dr - AM
Project:	Belle Terre Blvd/Pkwy Intersection Analysis
County:	Flagler

Is this a 4 way intersection?

- ○ Yes, my intersection has four approaches

If not, which 3 approaches exist in the intersection?

- ○ EB, WB, and SB
- ○ EB, WB, and NB
- ◉ EB, SB, and NB
- ○ WB, SB, and NB

Is the Mainline Oriented North/South? Enter Yes or No

- ◉ Yes
- ○ No

K Factors	Mainline
	9.00%
	Side street
	9.00%

D Factors	*Mainline*
Northbound (NB)	41.0%
Southbound (SB)	59.0%
	Side street
Westbound (WB)	0.0%
Eastbound (EB)	61.0%

Do you have FTSUTMS Model Year traffic from which you would like to interpolate/extrapolate for project years? (Y/N)

Enter Yes or No

- ◉ Yes
- ○ No

If "Yes" go to cell C47 — If "No" go to cell C31

Enter Year and Growth Rates from Base Year:

	Year	*Rate* (1.0% = 0.01) **Mainline**	**Side Street**
Base	2015	0.00%	0.00%
Opening	2025		
Mid	2035		
Design	2045		

Mainline Growth Function

- ◉ Linear
- ○ Exponential
- ○ Decaying

Side Street Growth Function

- ◉ Linear
- ○ Exponential
- ○ Decaying

Enter Base Year AADTs for Volume Comparison:

(growth rates are used to calculate other project years)

From West: EB Approach	*From East: WB Approach*	*From North: SB Approach*	*From South: NB Approach*	***TOTAL***
0	0	0	0	0

Enter Project and Model Years

	Year
Base	2015
Opening	2020
Mid	2025
Design	2030
Model	2030

Enter Base and Model Year AADTs for Volume Comparison:

(volumes for other project years are calculated by interpolation)

	From West: EB Approach	*From East: WB Approach*	*From North: SB Approach*	*From South: NB Approach*	***TOTAL***
2015	2700	0	26000	26000	54700
2030	9900	0	33000	36000	78900

First Guess Turning % Option Used
Existing Turning Movement Counts

		1st Guess Turning %'s for AADT Balancing	**Actual/Counted Traffic for 2015**
(EB LT)	*West-to-North*	30.0%	137
(EB THRU)	*West-to-East*	0.0%	0
(EB RT)	*West-to-South*	70.0%	320
(WB LT)	*East-to-South*	0.0%	0
(WB THRU)	*East-to-West*	0.0%	0
(WB RT)	*East-to-North*	0.0%	0
(SB LT)	*North-to-East*	0.0%	0
(SB THRU)	*North-to-South*	93.2%	908
(SB RT)	*North-to-West*	6.8%	66
(NB LT)	*South-to-West*	17.9%	132
(NB THRU)	*South-to-North*	82.1%	606
(NB RT)	*South-to-East*	0.0%	0

Desired Closure: 1.00

Existing Year AADTs — Only the existing year total departure volumes [AADT*K*(1-D)] will be used to calculate the turning percentages first guess.

Existing Turning Movement Counts — The turning percentages first guess is the same as the ***actual distribution of turning volumes entered***. No balancing technique is used.

FSUTMS Model Year AADTs — Only the FSUTMS model year departure volumes [AADT*K*(1-D)] will be used to calculate the turning percentages first guess.

PROJECT TRAFFIC FOR Belle Terre Pkwy AT Rymfire Dr - AM

DESIGN HOUR TURNING MOVEMENTS IN YEAR 2015

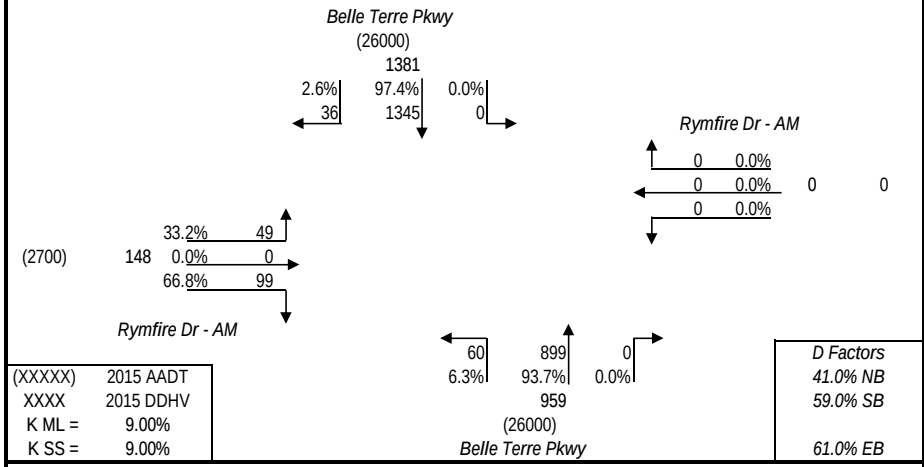

(XXXXX)	2015 AADT	
XXXX	2015 DDHV	
K ML =	9.00%	
K SS =	9.00%	

D Factors
41.0% NB
59.0% SB
61.0% EB

DESIGN HOUR TURNING MOVEMENTS IN YEAR 2020

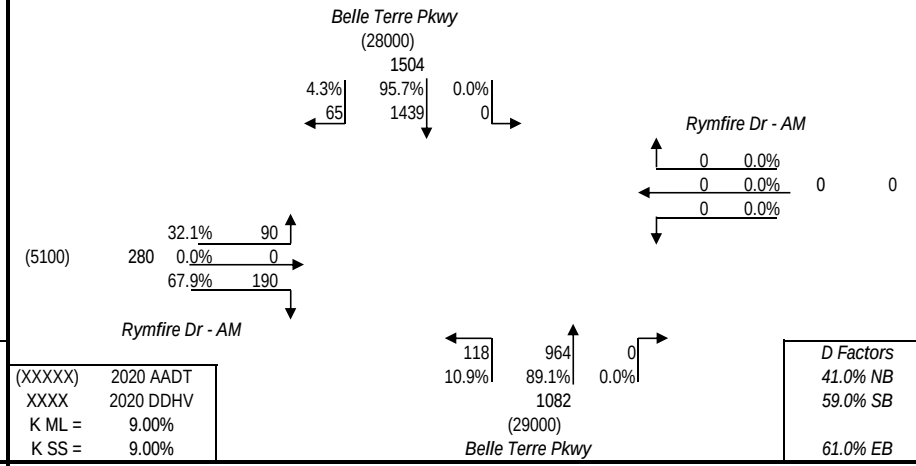

(XXXXX)	2020 AADT	
XXXX	2020 DDHV	
K ML =	9.00%	
K SS =	9.00%	

D Factors
41.0% NB
59.0% SB
61.0% EB

DESIGN HOUR TURNING MOVEMENTS IN YEAR 2025

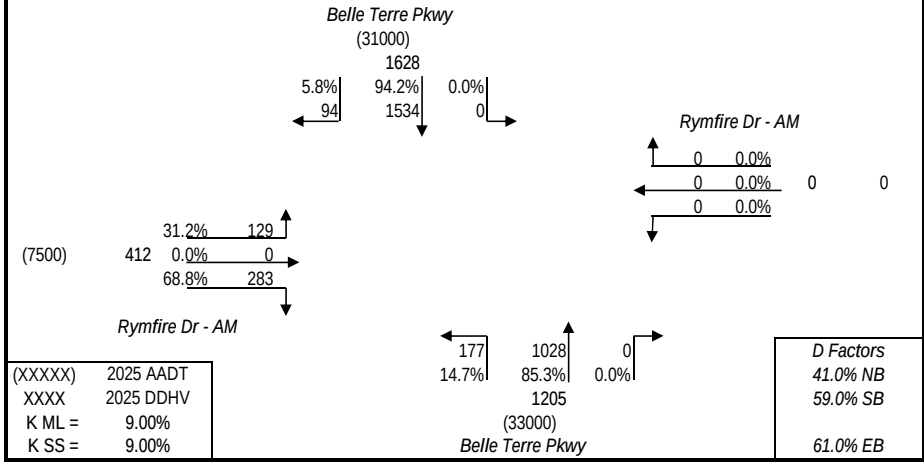

(XXXXX)	2025 AADT	
XXXX	2025 DDHV	
K ML =	9.00%	
K SS =	9.00%	

D Factors
41.0% NB
59.0% SB
61.0% EB

DESIGN HOUR TURNING MOVEMENTS IN YEAR 2030

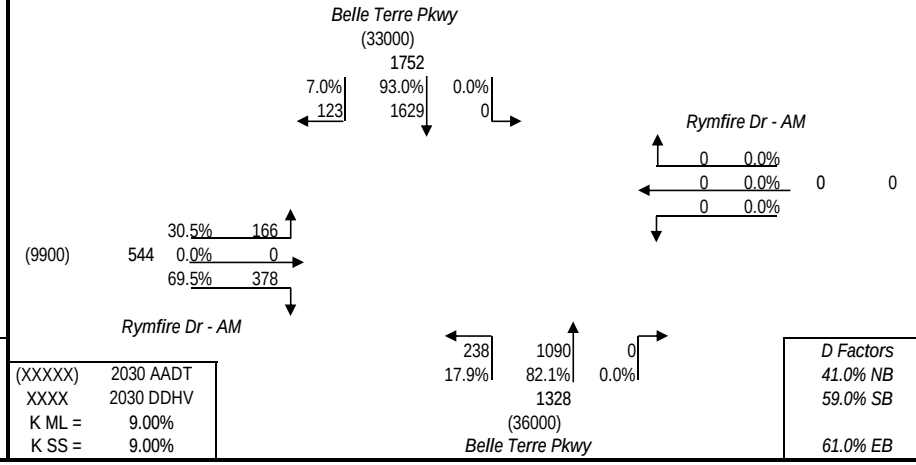

(XXXXX)	2030 AADT	
XXXX	2030 DDHV	
K ML =	9.00%	
K SS =	9.00%	

D Factors
41.0% NB
59.0% SB
61.0% EB

PROJECT TRAFFIC FOR Belle Terre Pkwy AT Rymfire Dr - AM

2015 INPUT TMCs COMPARED TO 2015 DHV

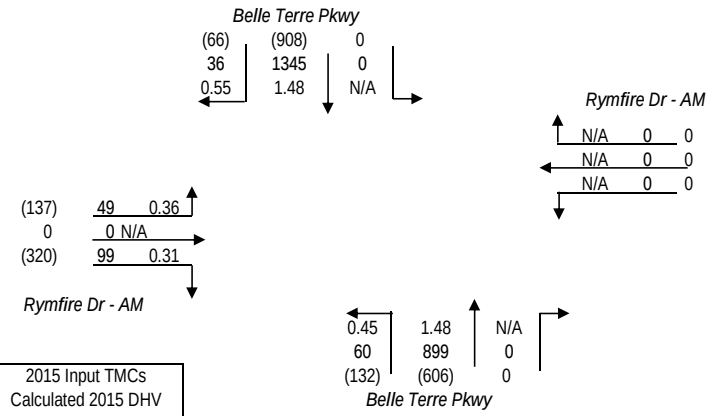

(XXX)	2015 Input TMCs
XXX	Calculated 2015 DHV
X.XX	Ratio

2015 INPUT TMCs COMPARED TO 2020 DHV

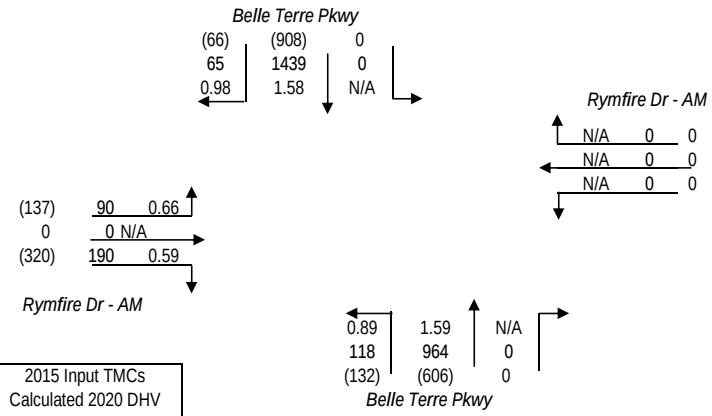

(XXX)	2015 Input TMCs
XXX	Calculated 2020 DHV
X.XX	Ratio

2015 INPUT TMCs COMPARED TO 2025 DHV

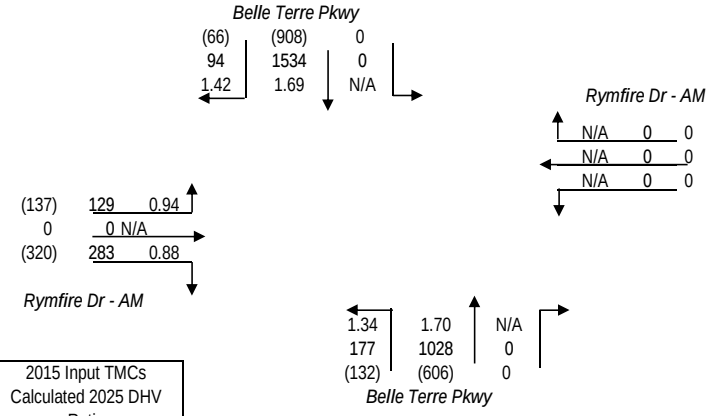

(XXX)	2015 Input TMCs
XXX	Calculated 2025 DHV
X.XX	Ratio

2015 INPUT TMCs COMPARED TO 2030 DHV

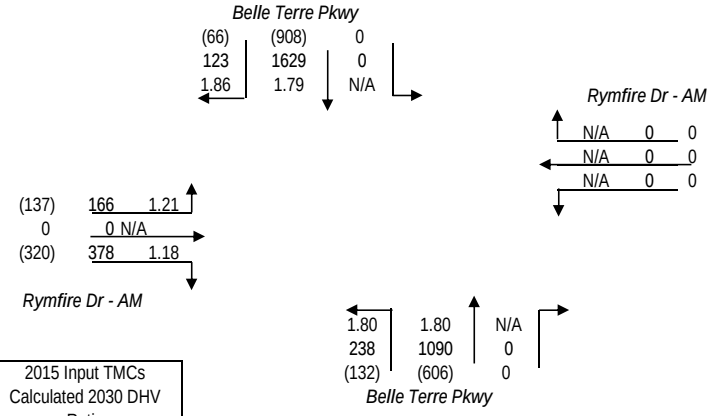

(XXX)	2015 Input TMCs
XXX	Calculated 2030 DHV
X.XX	Ratio

TURNS5 ANALYSIS SHEET - INPUT

Analyst:	-
Date:	13-Nov-15
Highway:	Belle Terre Pkwy
Intersection:	Ponce de Leon Dr - AM
Project:	Belle Terre Blvd/Pkwy Intersection Analysis
County:	Flagler

Is this a 4 way intersection?

- ○ Yes, my intersection has four approaches

If not, which 3 approaches exist in the intersection?

- ○ EB, WB, and SB
- ○ EB, WB, and NB
- ○ EB, SB, and NB
- ◉ WB, SB, and NB

Is the Mainline Oriented North/South? (Enter Yes or No)

- ◉ Yes
- ○ No

K Factors	
Mainline	9.00%
Side street	9.00%

D Factors	*Mainline*
Northbound (NB)	41.0%
Southbound (SB)	59.0%
	Side street
Westbound (WB)	61.0%
Eastbound (EB)	0.0%

Do you have FTSUTMS Model Year traffic from which you would like to interpolate/extrapolate for project years? (Y/N) (Enter Yes or No)

- ◉ Yes
- ○ No

If "Yes" go to cell C47 If "No" go to cell C31

Enter Year and Growth Rates from Base Year:

	Year	*Rate* (1.0% = 0.01) Mainline	Side Street
Base	2015	0.00%	0.00%
Opening	2025		
Mid	2035		
Design	2045		

Mainline Growth Function

- ◉ Linear
- ○ Exponential
- ○ Decaying

Side Street Growth Function

- ◉ Linear
- ○ Exponential
- ○ Decaying

Enter Base Year AADTs for Volume Comparison:
(growth rates are used to calculate other project years)

From West: EB Approach	*From East: WB Approach*	*From North: SB Approach*	*From South: NB Approach*	***TOTAL***
0	0	0	0	0

Enter Project and Model Years

	Year
Base	2015
Opening	2020
Mid	2025
Design	2030
Model	2030

Enter Base and Model Year AADTs for Volume Comparison:
(volumes for other project years are calculated by interpolation)

	From West: EB Approach	*From East: WB Approach*	*From North: SB Approach*	*From South: NB Approach*	***TOTAL***
2015	0	2222	26000	26000	54222
2030	0	2900	33000	33000	68900

		1st Guess Turning %'s for AADT Balancing	**Actual/Counted Traffic for 2015**
(EB LT)	*West-to-North*	0.0%	0
(EB THRU)	*West-to-East*	0.0%	0
(EB RT)	*West-to-South*	0.0%	0
(WB LT)	*East-to-South*	28.6%	36
(WB THRU)	*East-to-West*	0.0%	0
(WB RT)	*East-to-North*	71.4%	90
(SB LT)	*North-to-East*	3.6%	35
(SB THRU)	*North-to-South*	96.4%	938
(SB RT)	*North-to-West*	0.0%	0
(NB LT)	*South-to-West*	0.0%	0
(NB THRU)	*South-to-North*	98.0%	728
(NB RT)	*South-to-East*	2.0%	15

Desired Closure: 1.00

Existing Year AADTs

Existing Turning Movement Counts

FSUTMS Model Year AADTs

First Guess Turning % Option Used
Existing Turning Movement Counts

Only the existing year total departure volumes [AADT*K*(1-D)] will be used to calculate the turning percentages first guess.

The turning percentages first guess is the same as the ***actual distribution of turning volumes entered***. No balancing technique is used.

Only the FSUTMS model year departure volumes [AADT*K*(1-D)] will be used to calculate the turning percentages first guess.

PROJECT TRAFFIC FOR Belle Terre Pkwy AT Ponce de Leon Dr - AM

DESIGN HOUR TURNING MOVEMENTS IN YEAR 2015

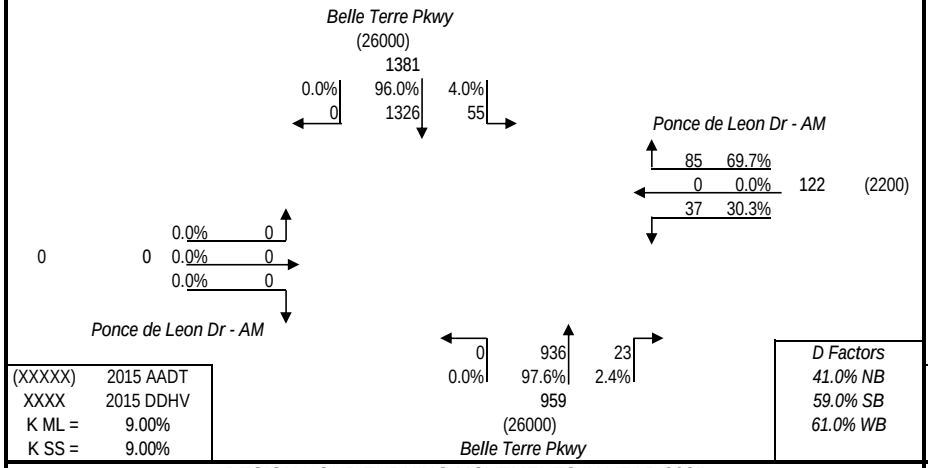

(XXXXX)	2015 AADT
XXXX	2015 DDHV
K ML =	9.00%
K SS =	9.00%

D Factors
41.0% NB
59.0% SB
61.0% WB

DESIGN HOUR TURNING MOVEMENTS IN YEAR 2020

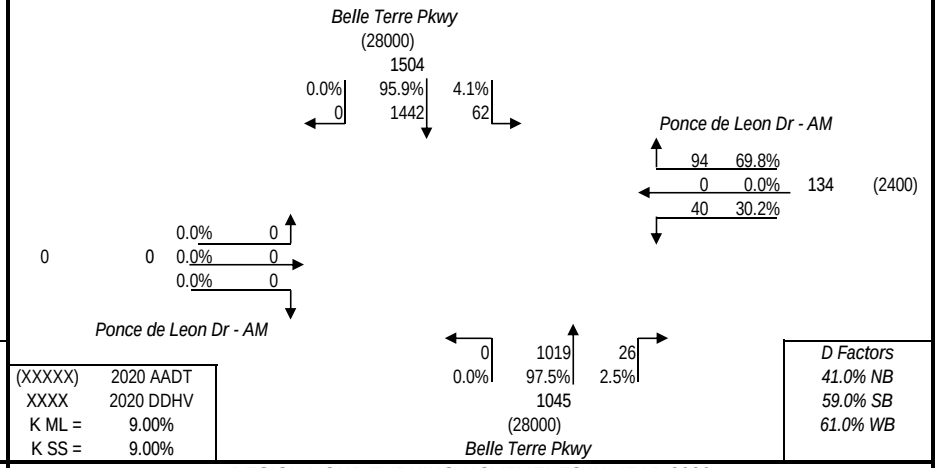

(XXXXX)	2020 AADT
XXXX	2020 DDHV
K ML =	9.00%
K SS =	9.00%

D Factors
41.0% NB
59.0% SB
61.0% WB

DESIGN HOUR TURNING MOVEMENTS IN YEAR 2025

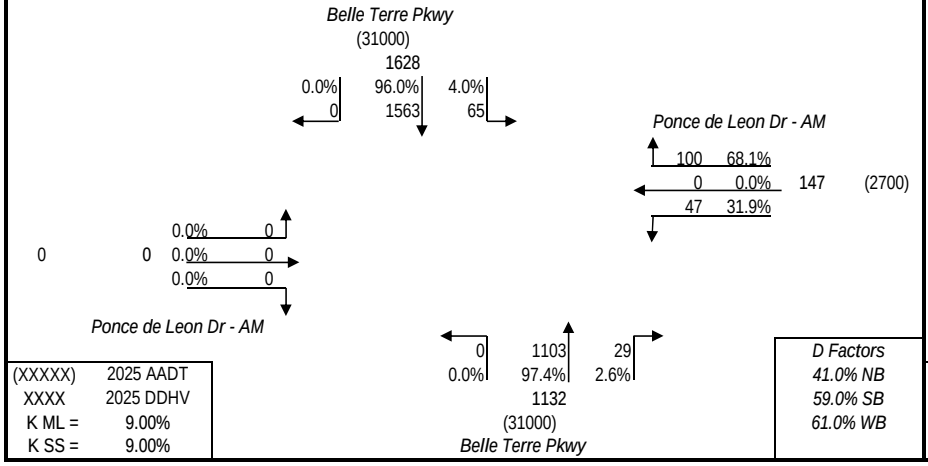

(XXXXX)	2025 AADT
XXXX	2025 DDHV
K ML =	9.00%
K SS =	9.00%

D Factors
41.0% NB
59.0% SB
61.0% WB

DESIGN HOUR TURNING MOVEMENTS IN YEAR 2030

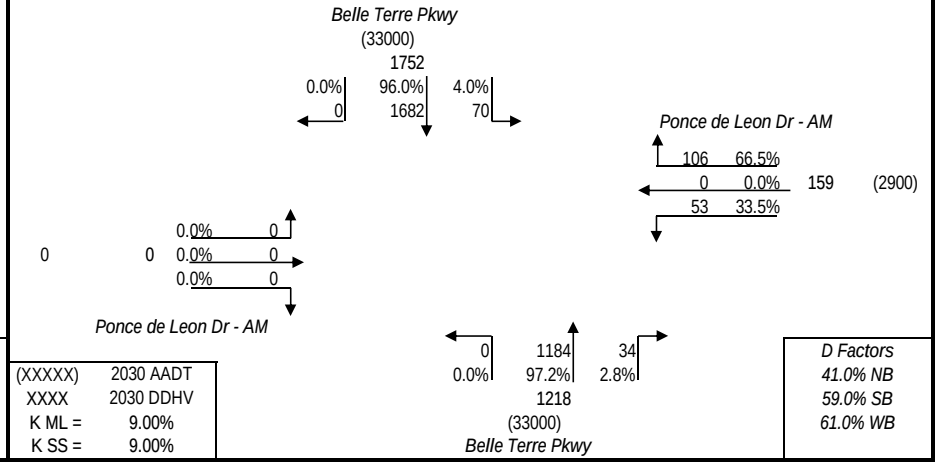

(XXXXX)	2030 AADT
XXXX	2030 DDHV
K ML =	9.00%
K SS =	9.00%

D Factors
41.0% NB
59.0% SB
61.0% WB

PROJECT TRAFFIC FOR Belle Terre Pkwy AT Ponce de Leon Dr - AM

2015 INPUT TMCs COMPARED TO 2015 DHV

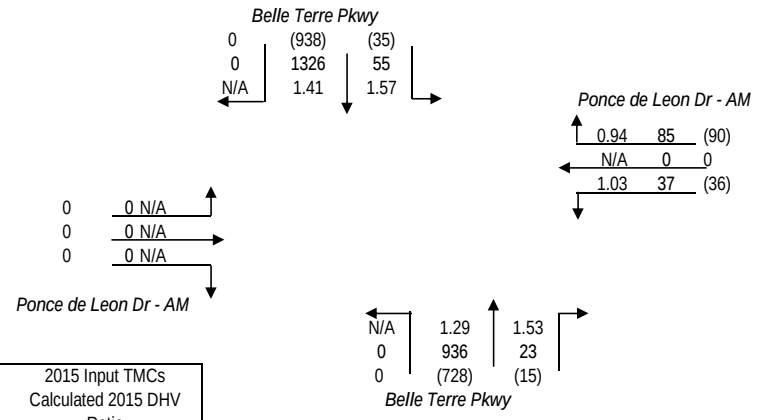

(XXX)	2015 Input TMCs
XXX	Calculated 2015 DHV
X.XX	Ratio

2015 INPUT TMCs COMPARED TO 2020 DHV

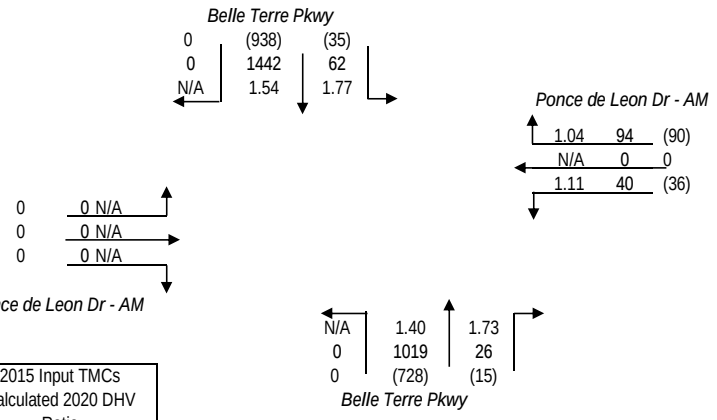

(XXX)	2015 Input TMCs
XXX	Calculated 2020 DHV
X.XX	Ratio

2015 INPUT TMCs COMPARED TO 2025 DHV

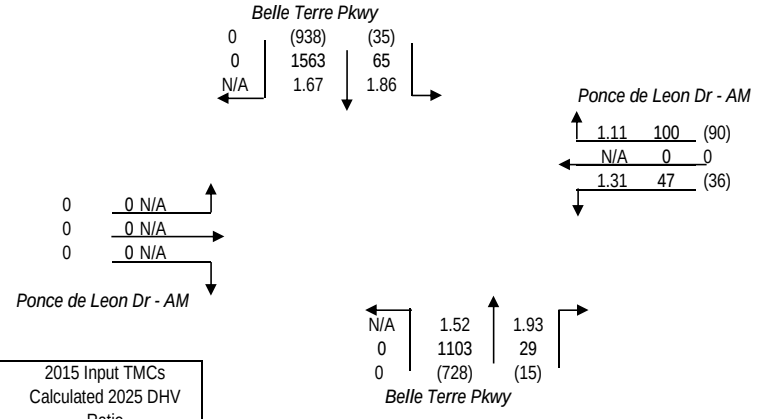

(XXX)	2015 Input TMCs
XXX	Calculated 2025 DHV
X.XX	Ratio

2015 INPUT TMCs COMPARED TO 2030 DHV

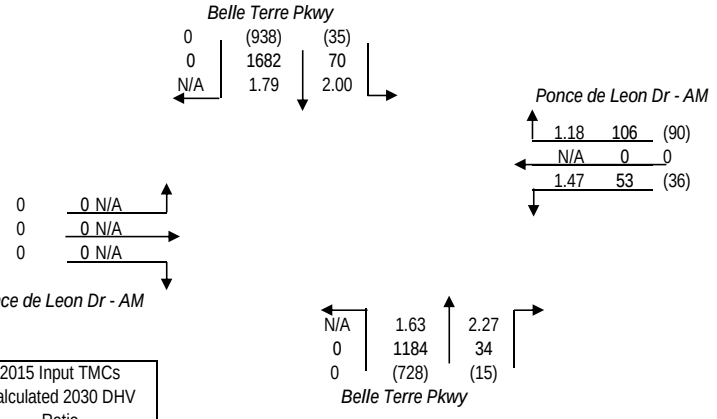

(XXX)	2015 Input TMCs
XXX	Calculated 2030 DHV
X.XX	Ratio

TURNS5 ANALYSIS SHEET - INPUT

Analyst:	-
Date:	13-Nov-15
Highway:	Belle Terre Pkwy
Intersection:	Pine Grove Dr - AM
Project:	Belle Terre Blvd/Pkwy Intersection Analysis
County:	Flagler

Is this a 4 way intersection?

- ○ Yes, my intersection has four approaches

If not, which 3 approaches exist in the intersection?

- ○ EB, WB, and SB
- ○ EB, WB, and NB
- ○ EB, SB, and NB
- ◉ WB, SB, and NB

Is the Mainline Oriented North/South? (Enter Yes or No)

- ◉ Yes
- ○ No

K Factors	
Mainline	9.00%
Side street	9.00%

D Factors	*Mainline*
Northbound (NB)	41.0%
Southbound (SB)	59.0%
	Side street
Westbound (WB)	61.0%
Eastbound (EB)	0.0%

Do you have FTSUTMS Model Year traffic from which you would like to interpolate/extrapolate for project years? (Y/N) (Enter Yes or No)

- ◉ Yes
- ○ No

If "Yes" go to cell C47 — If "No" go to cell C31

Enter Year and Growth Rates from Base Year:

	Year	*Rate* (1.0% = 0.01) Mainline	Side Street
Base	2015	0.00%	0.00%
Opening	2025		
Mid	2035		
Design	2045		

Mainline Growth Function
- ◉ Linear
- ○ Exponential
- ○ Decaying

Side Street Growth Function
- ◉ Linear
- ○ Exponential
- ○ Decaying

Enter Base Year AADTs for Volume Comparison:
(growth rates are used to calculate other project years)

From West: EB Approach	*From East: WB Approach*	*From North: SB Approach*	*From South: NB Approach*	***TOTAL***
0	0	0	0	0

Enter Project and Model Years

	Year
Base	2015
Opening	2020
Mid	2025
Design	2030
Model	2030

Enter Base and Model Year AADTs for Volume Comparison:
(volumes for other project years are calculated by interpolation)

	From West: EB Approach	*From East: WB Approach*	*From North: SB Approach*	*From South: NB Approach*	***TOTAL***
2015	0	4133	26000	26000	56133
2030	0	5300	34000	33000	72300

		1st Guess Turning %'s for AADT Balancing	**Actual/Counted Traffic for 2015**
(EB LT)	*West-to-North*	0.0%	0
(EB THRU)	*West-to-East*	0.0%	0
(EB RT)	*West-to-South*	0.0%	0
(WB LT)	*East-to-South*	52.6%	113
(WB THRU)	*East-to-West*	0.0%	0
(WB RT)	*East-to-North*	47.4%	102
(SB LT)	*North-to-East*	3.8%	34
(SB THRU)	*North-to-South*	96.2%	860
(SB RT)	*North-to-West*	0.0%	0
(NB LT)	*South-to-West*	0.0%	0
(NB THRU)	*South-to-North*	91.9%	752
(NB RT)	*South-to-East*	8.1%	66

Desired Closure: 1.00

Existing Year AADTs

Existing Turning Movement Counts

FSUTMS Model Year AADTs

First Guess Turning % Option Used
Existing Turning Movement Counts

Only the existing year total departure volumes [AADT*K*(1-D)] will be used to calculate the turning percentages first guess.

The turning percentages first guess is the same as the ***actual distribution of turning volumes entered***. No balancing technique is used.

Only the FSUTMS model year departure volumes [AADT*K*(1-D)] will be used to calculate the turning percentages first guess.

PROJECT TRAFFIC FOR Belle Terre Pkwy AT Pine Grove Dr - AM

DESIGN HOUR TURNING MOVEMENTS IN YEAR 2015

Belle Terre Pkwy
(26000)
1381
0.0% 0 | 95.6% 1320 | 4.4% 61

Pine Grove Dr - AM
109 47.8%
0 0.0% 227 (4100)
118 52.2%

0.0% 0
0 0 0.0% 0
0.0% 0

Pine Grove Dr - AM

0 | 871 | 88
0.0% | 90.8% | 9.2%
959
(26000)
Belle Terre Pkwy

(XXXXX)	2015 AADT
XXXX	2015 DDHV
K ML =	9.00%
K SS =	9.00%

D Factors
41.0% NB
59.0% SB
61.0% WB

DESIGN HOUR TURNING MOVEMENTS IN YEAR 2020

Belle Terre Pkwy
(29000)
1522
0.0% 0 | 95.5% 1454 | 4.5% 68

Pine Grove Dr - AM
120 48.4%
0 0.0% 248 (4500)
128 51.6%

0.0% 0
0 0 0.0% 0
0.0% 0

Pine Grove Dr - AM

0 | 950 | 95
0.0% | 90.9% | 9.1%
1045
(28000)
Belle Terre Pkwy

(XXXXX)	2020 AADT
XXXX	2020 DDHV
K ML =	9.00%
K SS =	9.00%

D Factors
41.0% NB
59.0% SB
61.0% WB

DESIGN HOUR TURNING MOVEMENTS IN YEAR 2025

Belle Terre Pkwy
(31000)
1664
0.0% 0 | 95.5% 1589 | 4.5% 75

Pine Grove Dr - AM
132 48.8%
0 0.0% 270 (4900)
138 51.2%

0.0% 0
0 0 0.0% 0
0.0% 0

Pine Grove Dr - AM

0 | 1030 | 102
0.0% | 91.0% | 9.0%
1132
(31000)
Belle Terre Pkwy

(XXXXX)	2025 AADT
XXXX	2025 DDHV
K ML =	9.00%
K SS =	9.00%

D Factors
41.0% NB
59.0% SB
61.0% WB

DESIGN HOUR TURNING MOVEMENTS IN YEAR 2030

Belle Terre Pkwy
(34000)
1805
0.0% 0 | 95.5% 1724 | 4.5% 81

Pine Grove Dr - AM
143 49.3%
0 0.0% 291 (5300)
148 50.7%

0.0% 0
0 0 0.0% 0
0.0% 0

Pine Grove Dr - AM

0 | 1110 | 108
0.0% | 91.1% | 8.9%
1218
(33000)
Belle Terre Pkwy

(XXXXX)	2030 AADT
XXXX	2030 DDHV
K ML =	9.00%
K SS =	9.00%

D Factors
41.0% NB
59.0% SB
61.0% WB

PROJECT TRAFFIC FOR Belle Terre Pkwy AT Pine Grove Dr - AM

2015 INPUT TMCs COMPARED TO 2015 DHV

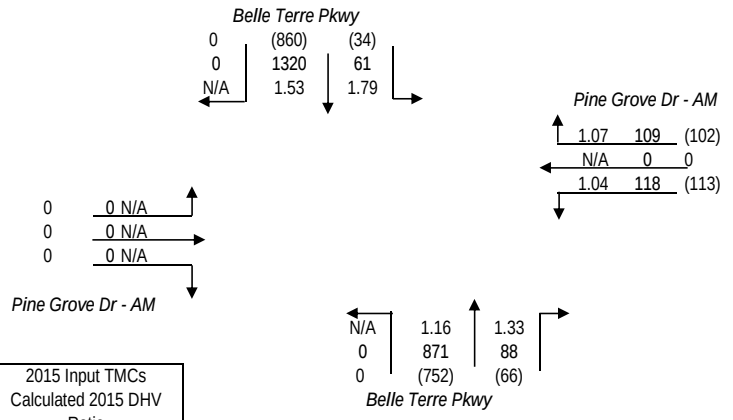

(XXX)	2015 Input TMCs
XXX	Calculated 2015 DHV
X.XX	Ratio

2015 INPUT TMCs COMPARED TO 2020 DHV

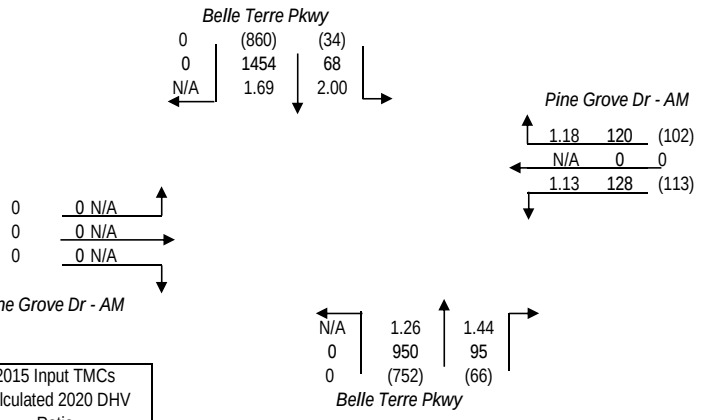

(XXX)	2015 Input TMCs
XXX	Calculated 2020 DHV
X.XX	Ratio

2015 INPUT TMCs COMPARED TO 2025 DHV

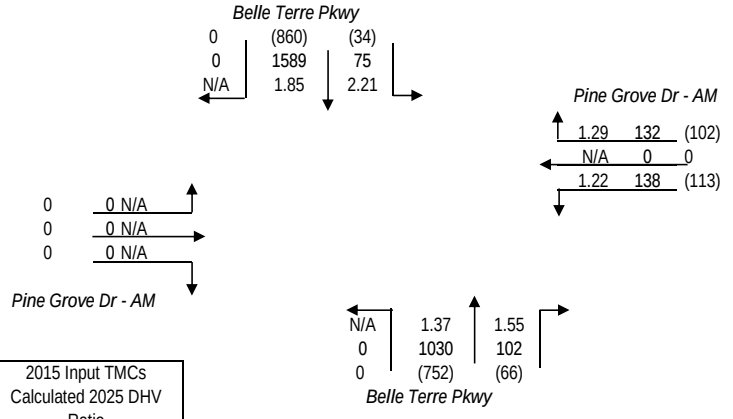

(XXX)	2015 Input TMCs
XXX	Calculated 2025 DHV
X.XX	Ratio

2015 INPUT TMCs COMPARED TO 2030 DHV

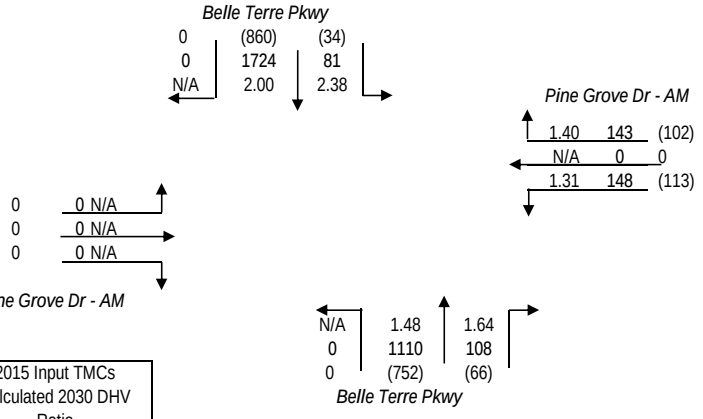

(XXX)	2015 Input TMCs
XXX	Calculated 2030 DHV
X.XX	Ratio

TURNS5 ANALYSIS SHEET - INPUT

Analyst:	-
Date:	13-Nov-15
Highway:	Belle Terre Pkwy
Intersection:	Whiteview Pkwy - AM
Project:	Belle Terre Blvd/Pkwy Intersection Analysis
County:	Flagler

Is this a 4 way intersection?

- (●) Yes, my intersection has four approaches

If not, which 3 approaches exist in the intersection?

- ( ) EB, WB, and SB
- ( ) EB, WB, and NB
- ( ) EB, SB, and NB
- ( ) WB, SB, and NB

Is the Mainline Oriented North/South? Enter Yes or No: (●) Yes ( ) No

K Factors	
Mainline	9.00%
Side street	9.00%

D Factors	*Mainline*
Northbound (NB)	41.0%
Southbound (SB)	59.0%
	Side street
Westbound (WB)	61.0%
Eastbound (EB)	39.0%

Do you have FTSUTMS Model Year traffic from which you would like to interpolate/extrapolate for project years? (Y/N)

Enter Yes or No: (●) Yes ( ) No

If "Yes" go to cell C47 — If "No" go to cell C31

Enter Year and Growth Rates from Base Year:

	Year	*Rate* (1.0% = 0.01) Mainline	Side Street
Base	2015	0.00%	0.00%
Opening	2025		
Mid	2035		
Design	2045		

Mainline Growth Function: (●) Linear ( ) Exponential ( ) Decaying

Side Street Growth Function: (●) Linear ( ) Exponential ( ) Decaying

Enter Base Year AADTs for Volume Comparison:
(growth rates are used to calculate other project years)

From West: EB Approach	*From East: WB Approach*	*From North: SB Approach*	*From South: NB Approach*	***TOTAL***
0	0	0	0	0

Enter Project and Model Years

	Year
Base	2015
Opening	2020
Mid	2025
Design	2030
Model	2030

Enter Base and Model Year AADTs for Volume Comparison:
(volumes for other project years are calculated by interpolation)

	From West: EB Approach	*From East: WB Approach*	*From North: SB Approach*	*From South: NB Approach*	***TOTAL***
2015	5400	4200	27000	26000	62600
2030	8600	6700	34000	34000	83300

First Guess Turning % Option Used
Existing Turning Movement Counts

		1st Guess Turning %'s for AADT Balancing	**Actual/Counted Traffic for 2015**
(EB LT)	*West-to-North*	46.2%	122
(EB THRU)	*West-to-East*	4.2%	11
(EB RT)	*West-to-South*	49.6%	131
(WB LT)	*East-to-South*	42.3%	118
(WB THRU)	*East-to-West*	24.4%	68
(WB RT)	*East-to-North*	33.3%	93
(SB LT)	*North-to-East*	5.6%	44
(SB THRU)	*North-to-South*	82.8%	645
(SB RT)	*North-to-West*	11.6%	90
(NB LT)	*South-to-West*	13.9%	119
(NB THRU)	*South-to-North*	81.3%	694
(NB RT)	*South-to-East*	4.8%	41

Desired Closure: 1.00

Existing Year AADTs — Only the existing year total departure volumes [AADT*K*(1-D)] will be used to calculate the turning percentages first guess.

Existing Turning Movement Counts — The turning percentages first guess is the same as the ***actual distribution of turning volumes entered***. No balancing technique is used.

FSUTMS Model Year AADTs — Only the FSUTMS model year departure volumes [AADT*K*(1-D)] will be used to calculate the turning percentages first guess.

PROJECT TRAFFIC FOR Belle Terre Pkwy AT Whiteview Pkwy - AM

DESIGN HOUR TURNING MOVEMENTS IN YEAR 2015

Belle Terre Pkwy
(27000)
1434
9.8% 141 | 84.0% 1204 | 6.2% 89

Whiteview Pkwy - AM
83 35.9%
48 20.8% 231 (4200)
100 43.3%

(5400) 190
47.3% 90
4.5% 8
48.2% 92

Whiteview Pkwy - AM

108 11.3% | 802 83.6% | 49 5.1%
959
(26000)
Belle Terre Pkwy

(XXXXX)	2015 AADT
XXXX	2015 DDHV
K ML =	9.00%
K SS =	9.00%

D Factors
41.0% NB
59.0% SB
61.0% WB
39.0% EB

DESIGN HOUR TURNING MOVEMENTS IN YEAR 2020

Belle Terre Pkwy
(29000)
1558
10.4% 162 | 82.9% 1292 | 6.7% 104

Whiteview Pkwy - AM
95 34.6%
62 22.3% 276 (5000)
119 43.1%

(6500) 227
46.3% 105
5.0% 11
48.7% 111

Whiteview Pkwy - AM

130 12.3% | 868 82.0% | 60 5.7%
1058
(29000)
Belle Terre Pkwy

(XXXXX)	2020 AADT
XXXX	2020 DDHV
K ML =	9.00%
K SS =	9.00%

D Factors
41.0% NB
59.0% SB
61.0% WB
39.0% EB

DESIGN HOUR TURNING MOVEMENTS IN YEAR 2025

Belle Terre Pkwy
(32000)
1682
10.9% 183 | 82.0% 1380 | 7.1% 119

Whiteview Pkwy - AM
108 33.6%
76 23.5% 322 (5900)
138 42.9%

(7500) 264
45.6% 120
5.3% 14
49.1% 130

Whiteview Pkwy - AM

153 13.2% | 932 80.7% | 71 6.1%
1156
(31000)
Belle Terre Pkwy

(XXXXX)	2025 AADT
XXXX	2025 DDHV
K ML =	9.00%
K SS =	9.00%

D Factors
41.0% NB
59.0% SB
61.0% WB
39.0% EB

DESIGN HOUR TURNING MOVEMENTS IN YEAR 2030

Belle Terre Pkwy
(34000)
1805
11.2% 202 | 81.5% 1471 | 7.3% 132

Whiteview Pkwy - AM
119 32.4%
90 24.5% 368 (6700)
159 43.1%

(8600) 302
44.4% 134
5.7% 17
49.9% 151

Whiteview Pkwy - AM

176 14.0% | 996 79.4% | 83 6.6%
1255
(34000)
Belle Terre Pkwy

(XXXXX)	2030 AADT
XXXX	2030 DDHV
K ML =	9.00%
K SS =	9.00%

D Factors
41.0% NB
59.0% SB
61.0% WB
39.0% EB

PROJECT TRAFFIC FOR Belle Terre Pkwy AT Whiteview Pkwy - AM

2015 INPUT TMCs COMPARED TO 2015 DHV

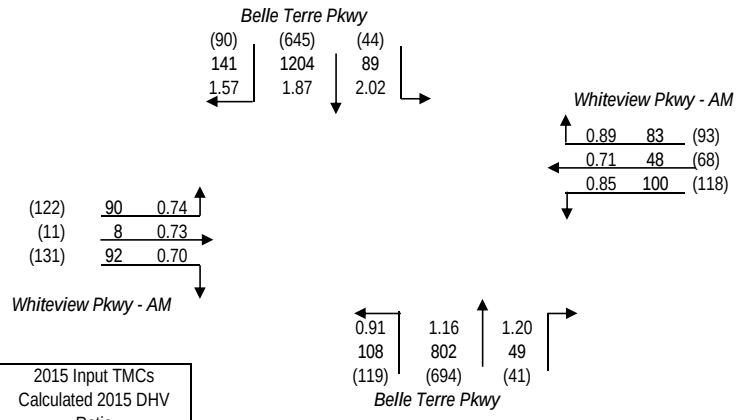

(XXX)	2015 Input TMCs
XXX	Calculated 2015 DHV
X.XX	Ratio

2015 INPUT TMCs COMPARED TO 2020 DHV

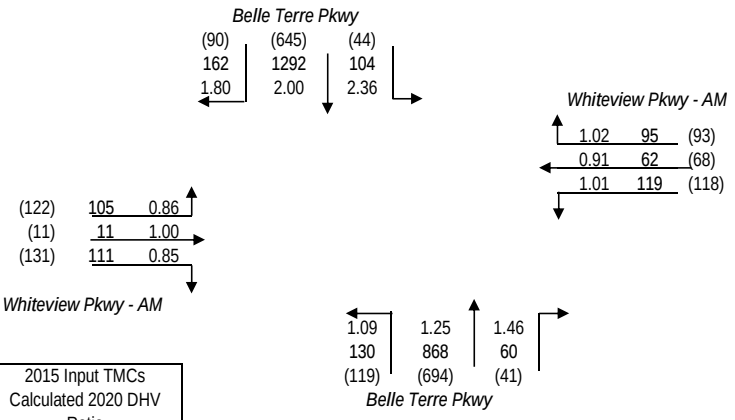

(XXX)	2015 Input TMCs
XXX	Calculated 2020 DHV
X.XX	Ratio

2015 INPUT TMCs COMPARED TO 2025 DHV

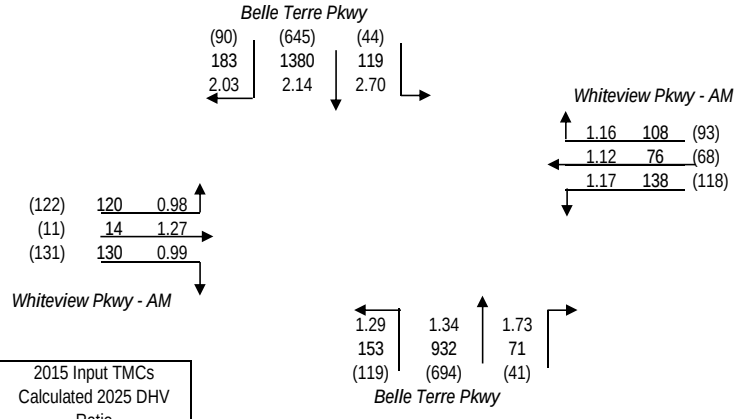

(XXX)	2015 Input TMCs
XXX	Calculated 2025 DHV
X.XX	Ratio

2015 INPUT TMCs COMPARED TO 2030 DHV

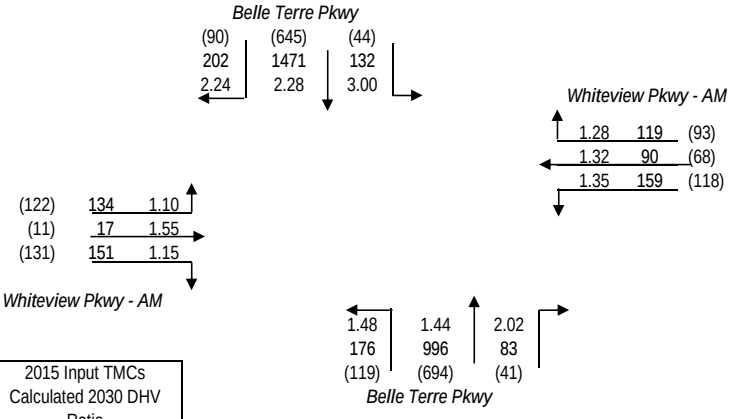

(XXX)	2015 Input TMCs
XXX	Calculated 2030 DHV
X.XX	Ratio

TURNS5 ANALYSIS SHEET - INPUT

Analyst:	-
Date:	13-Nov-15
Highway:	Belle Terre Pkwy
Intersection:	Whippoorwill Dr - AM
Project:	Belle Terre Blvd/Pkwy Intersection Analysis
County:	Flagler

Is this a 4 way intersection?

- ○ Yes, my intersection has four approaches

If not, which 3 approaches exist in the intersection?

- ○ EB, WB, and SB
- ○ EB, WB, and NB
- ◉ EB, SB, and NB
- ○ WB, SB, and NB

Is the Mainline Oriented North/South? Enter Yes or No: ◉ Yes ○ No

K Factors	
Mainline	9.00%
Side street	9.00%

D Factors	*Mainline*
Northbound (NB)	59.0%
Southbound (SB)	41.0%
	Side street
Westbound (WB)	0.0%
Eastbound (EB)	61.0%

Do you have FTSUTMS Model Year traffic from which you would like to interpolate/extrapolate for project years? (Y/N)

Enter Yes or No: ◉ Yes ○ No

If "Yes" go to cell C47 — If "No" go to cell C31

Enter Year and Growth Rates from Base Year:

	Year	*Rate* (1.0% = 0.01) Mainline	Side Street
Base	2015	0.00%	0.00%
Opening	2025		
Mid	2035		
Design	2045		

Mainline Growth Function: ◉ Linear ○ Exponential ○ Decaying

Side Street Growth Function: ◉ Linear ○ Exponential ○ Decaying

Enter Base Year AADTs for Volume Comparison:
(growth rates are used to calculate other project years)

From West: EB Approach	*From East: WB Approach*	*From North: SB Approach*	*From South: NB Approach*	***TOTAL***
0	0	0	0	0

Enter Project and Model Years

	Year
Base	2015
Opening	2020
Mid	2025
Design	2030
Model	2030

Enter Base and Model Year AADTs for Volume Comparison:
(volumes for other project years are calculated by interpolation)

	From West: EB Approach	*From East: WB Approach*	*From North: SB Approach*	*From South: NB Approach*	***TOTAL***
2015	2433	0	27000	27000	56433
2030	3100	0	34500	34000	71600

First Guess Turning % Option Used
Existing Turning Movement Counts

		1st Guess Turning %'s for AADT Balancing	**Actual/Counted Traffic for 2015**
(EB LT)	*West-to-North*	56.4%	57
(EB THRU)	*West-to-East*	0.0%	0
(EB RT)	*West-to-South*	43.6%	44
(WB LT)	*East-to-South*	0.0%	0
(WB THRU)	*East-to-West*	0.0%	0
(WB RT)	*East-to-North*	0.0%	0
(SB LT)	*North-to-East*	0.0%	0
(SB THRU)	*North-to-South*	94.8%	735
(SB RT)	*North-to-West*	5.2%	40
(NB LT)	*South-to-West*	3.3%	30
(NB THRU)	*South-to-North*	96.7%	879
(NB RT)	*South-to-East*	0.0%	0

Desired Closure: 1.00

Existing Year AADTs — Only the existing year total departure volumes [AADT*K*(1-D)] will be used to calculate the turning percentages first guess.

Existing Turning Movement Counts — The turning percentages first guess is the same as the ***actual distribution of turning volumes entered***. No balancing technique is used.

FSUTMS Model Year AADTs — Only the FSUTMS model year departure volumes [AADT*K*(1-D)] will be used to calculate the turning percentages first guess.

PROJECT TRAFFIC FOR Belle Terre Pkwy AT Whippoorwill Dr - AM

DESIGN HOUR TURNING MOVEMENTS IN YEAR 2015

Belle Terre Pkwy
(27000)
996
4.5% 45 | 95.5% 951 | 0.0% 0

Whippoorwill Dr - AM
0 0.0%
0 0.0% 0 0
0 0.0%

(2400) 134
56.1% 75
0.0% 0
43.9% 59

Whippoorwill Dr - AM

42 | 1392 | 0
2.9% | 97.1% | 0.0%
1434
(27000)
Belle Terre Pkwy

(XXXXX)	2015 AADT	
XXXX	2015 DDHV	
K ML =	9.00%	
K SS =	9.00%	

D Factors
59.0% NB
41.0% SB
61.0% EB

DESIGN HOUR TURNING MOVEMENTS IN YEAR 2020

Belle Terre Pkwy
(30000)
1089
4.6% 50 | 95.4% 1039 | 0.0% 0

Whippoorwill Dr - AM
0 0.0%
0 0.0% 0 0
0 0.0%

(2700) 146
56.4% 82
0.0% 0
43.6% 64

Whippoorwill Dr - AM

45 | 1513 | 0
2.9% | 97.1% | 0.0%
1558
(29000)
Belle Terre Pkwy

(XXXXX)	2020 AADT	
XXXX	2020 DDHV	
K ML =	9.00%	
K SS =	9.00%	

D Factors
59.0% NB
41.0% SB
61.0% EB

DESIGN HOUR TURNING MOVEMENTS IN YEAR 2025

Belle Terre Pkwy
(32000)
1181
4.6% 54 | 95.4% 1127 | 0.0% 0

Whippoorwill Dr - AM
0 0.0%
0 0.0% 0 0
0 0.0%

(2900) 158
56.6% 89
0.0% 0
43.4% 69

Whippoorwill Dr - AM

49 | 1633 | 0
2.9% | 97.1% | 0.0%
1682
(32000)
Belle Terre Pkwy

(XXXXX)	2025 AADT	
XXXX	2025 DDHV	
K ML =	9.00%	
K SS =	9.00%	

D Factors
59.0% NB
41.0% SB
61.0% EB

DESIGN HOUR TURNING MOVEMENTS IN YEAR 2030

Belle Terre Pkwy
(35000)
1273
4.6% 59 | 95.4% 1214 | 0.0% 0

Whippoorwill Dr - AM
0 0.0%
0 0.0% 0 0
0 0.0%

(3100) 170
56.8% 97
0.0% 0
43.2% 73

Whippoorwill Dr - AM

52 | 1753 | 0
2.9% | 97.1% | 0.0%
1805
(34000)
Belle Terre Pkwy

(XXXXX)	2030 AADT	
XXXX	2030 DDHV	
K ML =	9.00%	
K SS =	9.00%	

D Factors
59.0% NB
41.0% SB
61.0% EB

PROJECT TRAFFIC FOR Belle Terre Pkwy AT Whippoorwill Dr - AM

2015 INPUT TMCs COMPARED TO 2015 DHV

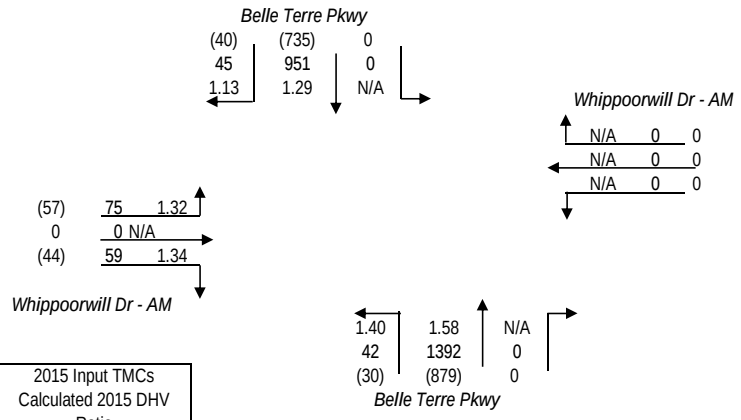

(XXX)	2015 Input TMCs
XXX	Calculated 2015 DHV
X.XX	Ratio

2015 INPUT TMCs COMPARED TO 2020 DHV

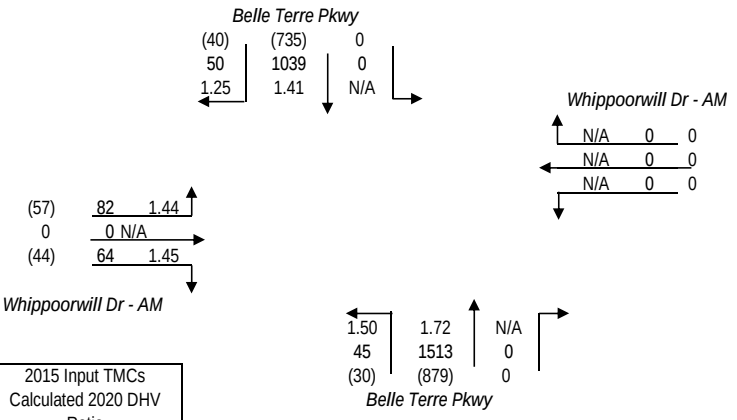

(XXX)	2015 Input TMCs
XXX	Calculated 2020 DHV
X.XX	Ratio

2015 INPUT TMCs COMPARED TO 2025 DHV

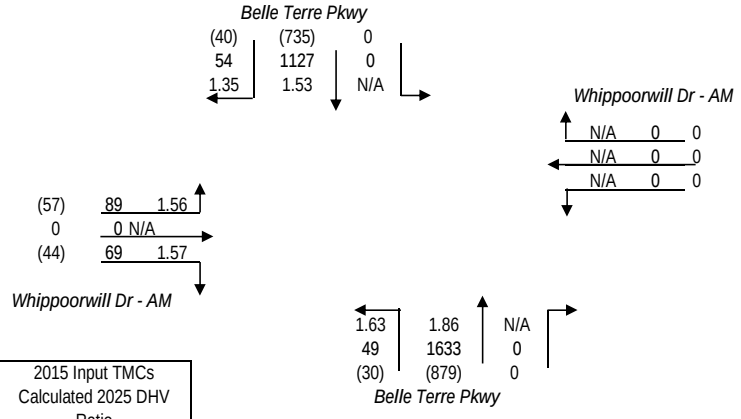

(XXX)	2015 Input TMCs
XXX	Calculated 2025 DHV
X.XX	Ratio

2015 INPUT TMCs COMPARED TO 2030 DHV

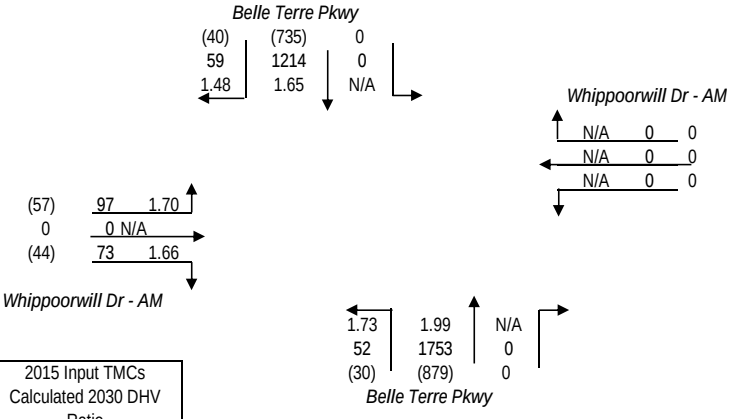

(XXX)	2015 Input TMCs
XXX	Calculated 2030 DHV
X.XX	Ratio

TURNS5 ANALYSIS SHEET - INPUT

Analyst:	-
Date:	13-Nov-15
Highway:	Belle Terre Pkwy
Intersection:	Pritchard Dr - AM
Project:	Belle Terre Blvd/Pkwy Intersection Analysis
County:	Flagler

Is this a 4 way intersection?

- ○ Yes, my intersection has four approaches

If not, which 3 approaches exist in the intersection?

- ○ EB, WB, and SB
- ○ EB, WB, and NB
- ○ EB, SB, and NB
- ◉ WB, SB, and NB

Is the Mainline Oriented North/South? (Enter Yes or No)

- ◉ Yes
- ○ No

K Factors	Mainline	**D Factors**	*Mainline*
	9.00%	Northbound (NB)	59.0%
	Side street	Southbound (SB)	41.0%
	9.00%		*Side street*
		Westbound (WB)	61.0%
		Eastbound (EB)	0.0%

Do you have FTSUTMS Model Year traffic from which you would like to interpolate/extrapolate for project years? (Y/N) (Enter Yes or No)

- ◉ Yes
- ○ No

If "Yes" go to cell C47 If "No" go to cell C31

Enter Year and Growth Rates from Base Year:

	Year	*Rate* (1.0% = 0.01) Mainline	Side Street
Base	2015	0.00%	0.00%
Opening	2025		
Mid	2035		
Design	2045		

Mainline Growth Function

- ◉ Linear
- ○ Exponential
- ○ Decaying

Side Street Growth Function

- ◉ Linear
- ○ Exponential
- ○ Decaying

Enter Base Year AADTs for Volume Comparison:
(growth rates are used to calculate other project years)

From West: EB Approach	*From East: WB Approach*	*From North: SB Approach*	*From South: NB Approach*	***TOTAL***
0	0	0	0	0

Enter Project and Model Years

	Year
Base	2015
Opening	2020
Mid	2025
Design	2030
Model	2030

Enter Base and Model Year AADTs for Volume Comparison:
(volumes for other project years are calculated by interpolation)

	From West: EB Approach	*From East: WB Approach*	*From North: SB Approach*	*From South: NB Approach*	***TOTAL***
2015	0	3533	27000	27000	57533
2030	0	4500	35000	34500	74000

		1st Guess Turning %'s for AADT Balancing	**Actual/Counted Traffic for 2015**
(EB LT)	*West-to-North*	0.0%	0
(EB THRU)	*West-to-East*	0.0%	0
(EB RT)	*West-to-South*	0.0%	0
(WB LT)	*East-to-South*	25.0%	43
(WB THRU)	*East-to-West*	0.0%	0
(WB RT)	*East-to-North*	75.0%	129
(SB LT)	*North-to-East*	6.5%	51
(SB THRU)	*North-to-South*	93.5%	732
(SB RT)	*North-to-West*	0.0%	0
(NB LT)	*South-to-West*	0.0%	0
(NB THRU)	*South-to-North*	97.3%	911
(NB RT)	*South-to-East*	2.7%	25

Desired Closure: 1.00

Existing Year AADTs

Existing Turning Movement Counts

FSUTMS Model Year AADTs

First Guess Turning % Option Used
Existing Turning Movement Counts

Only the existing year total departure volumes [AADT*K*(1-D)] will be used to calculate the turning percentages first guess.

The turning percentages first guess is the same as the ***actual distribution of turning volumes entered***. No balancing technique is used.

Only the FSUTMS model year departure volumes [AADT*K*(1-D)] will be used to calculate the turning percentages first guess.

PROJECT TRAFFIC FOR Belle Terre Pkwy AT Pritchard Dr - AM

DESIGN HOUR TURNING MOVEMENTS IN YEAR 2015

Belle Terre Pkwy
(27000)
996

0.0% 0 | 92.9% 925 | 7.1% 71

Pritchard Dr - AM
136 69.9%
0 0.0% 194 (3500)
58 30.1%

0.0% 0
0 0 0.0% 0
0.0% 0

Pritchard Dr - AM

0 | 1380 | 54
0.0% | 96.2% | 3.8%
1434
(27000)
Belle Terre Pkwy

(XXXXX)	2015 AADT
XXXX	2015 DDHV
K ML =	9.00%
K SS =	9.00%

D Factors
59.0% NB
41.0% SB
61.0% WB

DESIGN HOUR TURNING MOVEMENTS IN YEAR 2020

Belle Terre Pkwy
(30000)
1095

0.0% 0 | 92.4% 1012 | 7.6% 83

Pritchard Dr - AM
156 73.5%
0 0.0% 212 (3900)
56 26.5%

0.0% 0
0 0 0.0% 0
0.0% 0

Pritchard Dr - AM

0 | 1513 | 53
0.0% | 96.6% | 3.4%
1566
(30000)
Belle Terre Pkwy

(XXXXX)	2020 AADT
XXXX	2020 DDHV
K ML =	9.00%
K SS =	9.00%

D Factors
59.0% NB
41.0% SB
61.0% WB

DESIGN HOUR TURNING MOVEMENTS IN YEAR 2025

Belle Terre Pkwy
(32000)
1193

0.0% 0 | 92.4% 1102 | 7.6% 91

Pritchard Dr - AM
169 73.7%
0 0.0% 229 (4200)
60 26.3%

0.0% 0
0 0 0.0% 0
0.0% 0

Pritchard Dr - AM

0 | 1641 | 58
0.0% | 96.6% | 3.4%
1699
(32000)
Belle Terre Pkwy

(XXXXX)	2025 AADT
XXXX	2025 DDHV
K ML =	9.00%
K SS =	9.00%

D Factors
59.0% NB
41.0% SB
61.0% WB

DESIGN HOUR TURNING MOVEMENTS IN YEAR 2030

Belle Terre Pkwy
(35000)
1292

0.0% 0 | 92.4% 1194 | 7.6% 98

Pritchard Dr - AM
183 73.9%
0 0.0% 247 (4500)
64 26.1%

0.0% 0
0 0 0.0% 0
0.0% 0

Pritchard Dr - AM

0 | 1770 | 62
0.0% | 96.6% | 3.4%
1832
(35000)
Belle Terre Pkwy

(XXXXX)	2030 AADT
XXXX	2030 DDHV
K ML =	9.00%
K SS =	9.00%

D Factors
59.0% NB
41.0% SB
61.0% WB

PROJECT TRAFFIC FOR Belle Terre Pkwy AT Pritchard Dr - AM

2015 INPUT TMCs COMPARED TO 2015 DHV

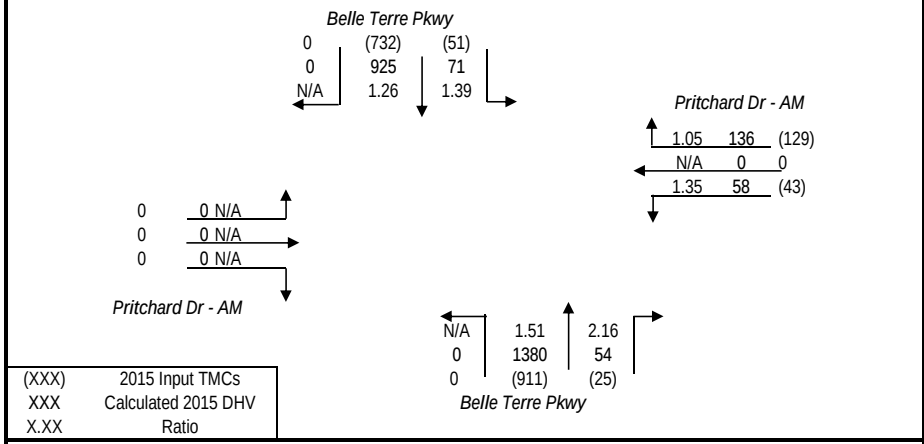

2015 INPUT TMCs COMPARED TO 2020 DHV

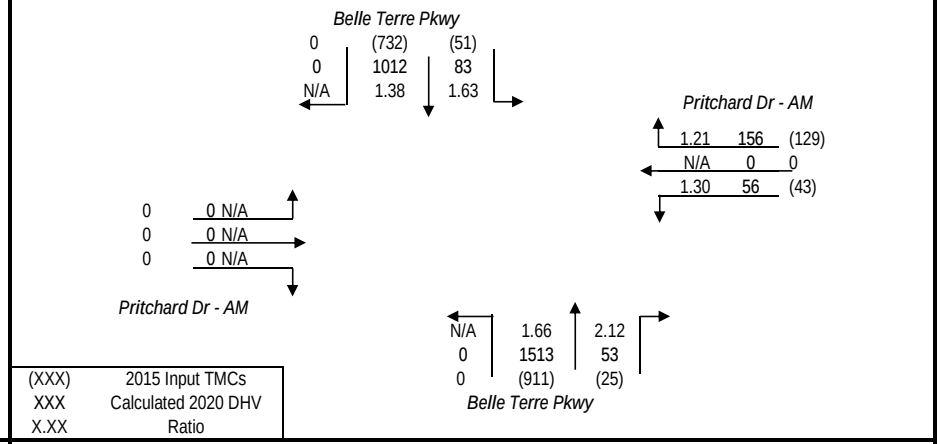

2015 INPUT TMCs COMPARED TO 2025 DHV

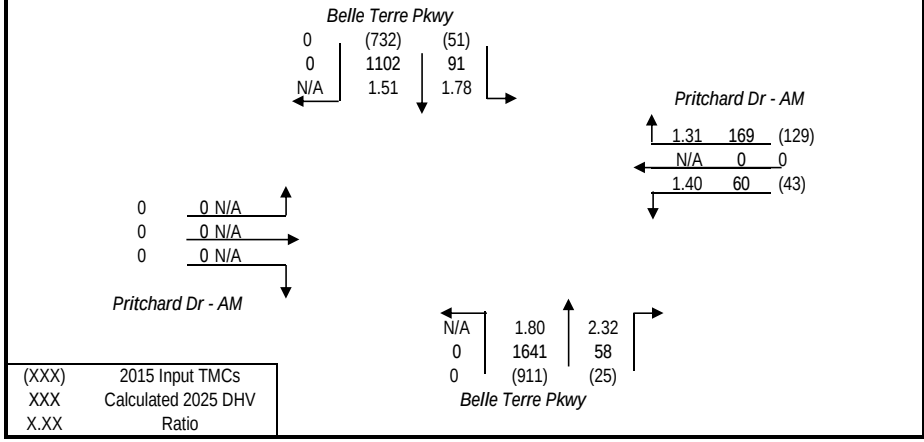

2015 INPUT TMCs COMPARED TO 2030 DHV

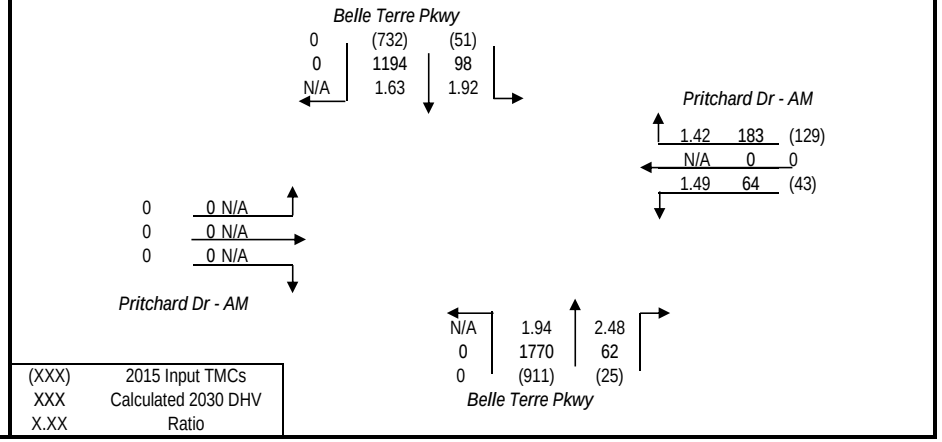

TURNS5 ANALYSIS SHEET - INPUT

Analyst:	-
Date:	13-Nov-15
Highway:	Belle Terre Pkwy
Intersection:	School Entrance- AM
Project:	Belle Terre Blvd/Pkwy Intersection Analysis
County:	Flagler

Is this a 4 way intersection?

- ○ Yes, my intersection has four approaches

If not, which 3 approaches exist in the intersection?

- ○ EB, WB, and SB
- ○ EB, WB, and NB
- ○ EB, SB, and NB
- ◉ WB, SB, and NB

Is the Mainline Oriented North/South? (Enter Yes or No)

- ◉ Yes
- ○ No

K Factors	
Mainline	9.00%
Side street	9.00%

D Factors	*Mainline*
Northbound (NB)	59.0%
Southbound (SB)	41.0%
	Side street
Westbound (WB)	39.0%
Eastbound (EB)	0.0%

Do you have FTSUTMS Model Year traffic from which you would like to interpolate/extrapolate for project years? (Y/N) (Enter Yes or No)

- ◉ Yes
- ○ No

If "Yes" go to cell C47 — If "No" go to cell C31

Enter Year and Growth Rates from Base Year:

	Year	*Rate* (1.0% = 0.01) Mainline	Side Street
Base	2015	0.00%	0.00%
Opening	2025		
Mid	2035		
Design	2045		

Mainline Growth Function
- ◉ Linear
- ○ Exponential
- ○ Decaying

Side Street Growth Function
- ◉ Linear
- ○ Exponential
- ○ Decaying

Enter Base Year AADTs for Volume Comparison:
(growth rates are used to calculate other project years)

From West: EB Approach	*From East: WB Approach*	*From North: SB Approach*	*From South: NB Approach*	***TOTAL***
0	0	0	0	0

Enter Project and Model Years

	Year
Base	2015
Opening	2020
Mid	2025
Design	2030
Model	2030

Enter Base and Model Year AADTs for Volume Comparison:
(volumes for other project years are calculated by interpolation)

	From West: EB Approach	*From East: WB Approach*	*From North: SB Approach*	*From South: NB Approach*	***TOTAL***
2015	0	2289	27000	27000	56289
2030	0	2900	35000	35000	72900

First Guess Turning % Option Used
Existing Turning Movement Counts

		1st Guess Turning %'s for AADT Balancing	**Actual/Counted Traffic for 2015**
(EB LT)	*West-to-North*	0.0%	0
(EB THRU)	*West-to-East*	0.0%	0
(EB RT)	*West-to-South*	0.0%	0
(WB LT)	*East-to-South*	68.8%	22
(WB THRU)	*East-to-West*	0.0%	0
(WB RT)	*East-to-North*	31.2%	10
(SB LT)	*North-to-East*	16.6%	151
(SB THRU)	*North-to-South*	83.4%	761
(SB RT)	*North-to-West*	0.0%	0
(NB LT)	*South-to-West*	0.0%	0
(NB THRU)	*South-to-North*	97.8%	1017
(NB RT)	*South-to-East*	2.2%	23

Desired Closure: 2.00

Existing Year AADTs — Only the existing year total departure volumes [AADT*K*(1-D)] will be used to calculate the turning percentages first guess.

Existing Turning Movement Counts — The turning percentages first guess is the same as the ***actual distribution of turning volumes entered***. No balancing technique is used.

FSUTMS Model Year AADTs — Only the FSUTMS model year departure volumes [AADT*K*(1-D)] will be used to calculate the turning percentages first guess.

PROJECT TRAFFIC FOR Belle Terre Pkwy AT School Entrance- AM

DESIGN HOUR TURNING MOVEMENTS IN YEAR 2015

Belle Terre Pkwy
(27000)
996

0.0% 0 | 89.8% 894 | 10.2% 102

School Entrance- AM
23 28.8%
0 0.0% 80 (2300)
57 71.2%

0.0% 0
0 0 0.0% 0
0.0% 0

School Entrance- AM

0 | 1414 | 20
0.0% | 98.6% | 1.4%
1434
(27000)
Belle Terre Pkwy

(XXXXX)	2015 AADT
XXXX	2015 DDHV
K ML =	9.00%
K SS =	9.00%

D Factors
59.0% NB
41.0% SB
39.0% WB

DESIGN HOUR TURNING MOVEMENTS IN YEAR 2020

Belle Terre Pkwy
(30000)
1095

0.0% 0 | 89.9% 984 | 10.1% 111

School Entrance- AM
25 28.8%
0 0.0% 88 (2500)
63 71.2%

0.0% 0
0 0 0.0% 0
0.0% 0

School Entrance- AM

0 | 1553 | 22
0.0% | 98.6% | 1.4%
1575
(30000)
Belle Terre Pkwy

(XXXXX)	2020 AADT
XXXX	2020 DDHV
K ML =	9.00%
K SS =	9.00%

D Factors
59.0% NB
41.0% SB
39.0% WB

DESIGN HOUR TURNING MOVEMENTS IN YEAR 2025

Belle Terre Pkwy
(32000)
1193

0.0% 0 | 90.0% 1074 | 10.0% 119

School Entrance- AM
27 28.8%
0 0.0% 95 (2700)
68 71.2%

0.0% 0
0 0 0.0% 0
0.0% 0

School Entrance- AM

0 | 1693 | 24
0.0% | 98.6% | 1.4%
1717
(32000)
Belle Terre Pkwy

(XXXXX)	2025 AADT
XXXX	2025 DDHV
K ML =	9.00%
K SS =	9.00%

D Factors
59.0% NB
41.0% SB
39.0% WB

DESIGN HOUR TURNING MOVEMENTS IN YEAR 2030

Belle Terre Pkwy
(35000)
1292

0.0% 0 | 90.1% 1164 | 9.9% 128

School Entrance- AM
29 28.3%
0 0.0% 102 (2900)
73 71.7%

0.0% 0
0 0 0.0% 0
0.0% 0

School Entrance- AM

0 | 1833 | 26
0.0% | 98.6% | 1.4%
1859
(35000)
Belle Terre Pkwy

(XXXXX)	2030 AADT
XXXX	2030 DDHV
K ML =	9.00%
K SS =	9.00%

D Factors
59.0% NB
41.0% SB
39.0% WB

PROJECT TRAFFIC FOR Belle Terre Pkwy AT School Entrance- AM

2015 INPUT TMCs COMPARED TO 2015 DHV

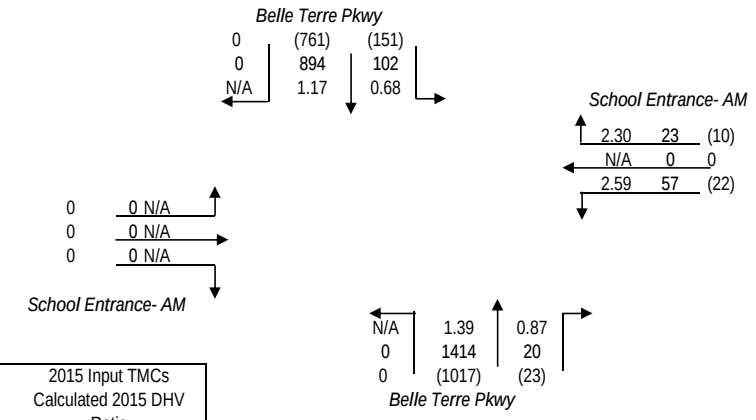

(XXX)	2015 Input TMCs
XXX	Calculated 2015 DHV
X.XX	Ratio

2015 INPUT TMCs COMPARED TO 2020 DHV

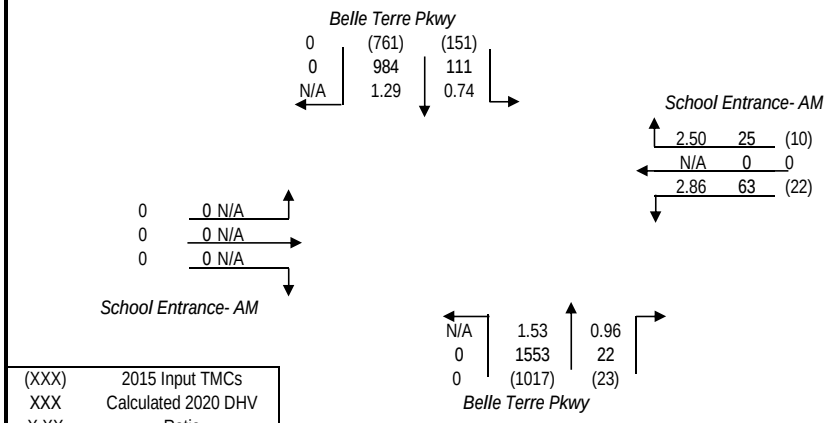

(XXX)	2015 Input TMCs
XXX	Calculated 2020 DHV
X.XX	Ratio

2015 INPUT TMCs COMPARED TO 2025 DHV

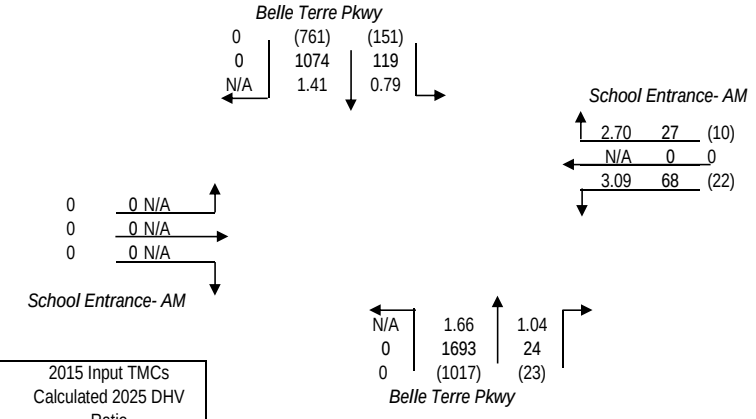

(XXX)	2015 Input TMCs
XXX	Calculated 2025 DHV
X.XX	Ratio

2015 INPUT TMCs COMPARED TO 2030 DHV

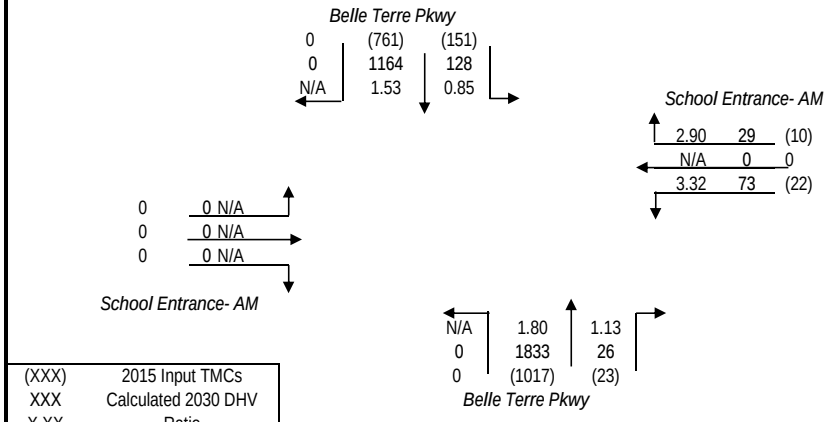

(XXX)	2015 Input TMCs
XXX	Calculated 2030 DHV
X.XX	Ratio

TURNS5 ANALYSIS SHEET - INPUT

Analyst:	-
Date:	13-Nov-15
Highway:	Belle Terre Pkwy
Intersection:	Parkview Dr (S) - AM
Project:	Belle Terre Blvd/Pkwy Intersection Analysis
County:	Flagler

Is this a 4 way intersection?

- ○ Yes, my intersection has four approaches

If not, which 3 approaches exist in the intersection?

- ○ EB, WB, and SB
- ○ EB, WB, and NB
- ○ EB, SB, and NB
- ◉ WB, SB, and NB

Is the Mainline Oriented North/South? (Enter Yes or No)

- ◉ Yes
- ○ No

K Factors	
Mainline	9.00%
Side street	9.00%

D Factors	*Mainline*
Northbound (NB)	59.0%
Southbound (SB)	41.0%
	Side street
Westbound (WB)	61.0%
Eastbound (EB)	0.0%

Do you have FTSUTMS Model Year traffic from which you would like to interpolate/extrapolate for project years? (Y/N) (Enter Yes or No)

- ◉ Yes
- ○ No

If "Yes" go to cell C47 If "No" go to cell C31

Enter Year and Growth Rates from Base Year:

	Year	*Rate* (1.0% = 0.01) Mainline	Side Street
Base	2015	0.00%	0.00%
Opening	2025		
Mid	2035		
Design	2045		

Mainline Growth Function

- ◉ Linear
- ○ Exponential
- ○ Decaying

Side Street Growth Function

- ◉ Linear
- ○ Exponential
- ○ Decaying

Enter Base Year AADTs for Volume Comparison:
(growth rates are used to calculate other project years)

From West: EB Approach	*From East: WB Approach*	*From North: SB Approach*	*From South: NB Approach*	***TOTAL***
0	0	0	0	0

Enter Project and Model Years

	Year
Base	2015
Opening	2020
Mid	2025
Design	2030
Model	2030

Enter Base and Model Year AADTs for Volume Comparison:
(volumes for other project years are calculated by interpolation)

	From West: EB Approach	*From East: WB Approach*	*From North: SB Approach*	*From South: NB Approach*	***TOTAL***
2015	0	6667	27000	27000	60667
2030	0	8600	33000	35000	76600

		1st Guess Turning %'s for AADT Balancing	**Actual/Counted Traffic for 2015**
(EB LT)	*West-to-North*	0.0%	0
(EB THRU)	*West-to-East*	0.0%	0
(EB RT)	*West-to-South*	0.0%	0
(WB LT)	*East-to-South*	55.9%	266
(WB THRU)	*East-to-West*	0.0%	0
(WB RT)	*East-to-North*	44.1%	210
(SB LT)	*North-to-East*	7.1%	49
(SB THRU)	*North-to-South*	92.9%	646
(SB RT)	*North-to-West*	0.0%	0
(NB LT)	*South-to-West*	0.0%	0
(NB THRU)	*South-to-North*	92.7%	952
(NB RT)	*South-to-East*	7.3%	75

Desired Closure: 1.00

Existing Year AADTs

Existing Turning Movement Counts

FSUTMS Model Year AADTs

First Guess Turning % Option Used
Existing Turning Movement Counts

Only the existing year total departure volumes [AADT*K*(1-D)] will be used to calculate the turning percentages first guess.

The turning percentages first guess is the same as the ***actual distribution of turning volumes entered***. No balancing technique is used.

Only the FSUTMS model year departure volumes [AADT*K*(1-D)] will be used to calculate the turning percentages first guess.

PROJECT TRAFFIC FOR Belle Terre Pkwy AT Parkview Dr (S) - AM

DESIGN HOUR TURNING MOVEMENTS IN YEAR 2015

Belle Terre Pkwy
(27000)
996
0.0% 0 | 89.6% 892 | 10.4% 104

Parkview Dr (S) - AM
169 46.3%
0 0.0% 366 (6700)
197 53.7%

0.0% 0
0 0 0.0% 0
0.0% 0

Parkview Dr (S) - AM

0 | 0.0% | 1292 90.1% | 142 9.9%
1434
(27000)
Belle Terre Pkwy

(XXXXX)	2015 AADT
XXXX	2015 DDHV
K ML =	9.00%
K SS =	9.00%

D Factors
59.0% NB
41.0% SB
61.0% WB

DESIGN HOUR TURNING MOVEMENTS IN YEAR 2020

Belle Terre Pkwy
(29000)
1070
0.0% 0 | 89.7% 960 | 10.3% 110

Parkview Dr (S) - AM
181 45.2%
0 0.0% 401 (7300)
220 54.8%

0.0% 0
0 0 0.0% 0
0.0% 0

Parkview Dr (S) - AM

0 | 0.0% | 1416 89.9% | 159 10.1%
1575
(30000)
Belle Terre Pkwy

(XXXXX)	2020 AADT
XXXX	2020 DDHV
K ML =	9.00%
K SS =	9.00%

D Factors
59.0% NB
41.0% SB
61.0% WB

DESIGN HOUR TURNING MOVEMENTS IN YEAR 2025

Belle Terre Pkwy
(31000)
1144
0.0% 0 | 89.8% 1027 | 10.2% 117

Parkview Dr (S) - AM
194 44.4%
0 0.0% 437 (8000)
243 55.6%

0.0% 0
0 0 0.0% 0
0.0% 0

Parkview Dr (S) - AM

0 | 0.0% | 1540 89.7% | 177 10.3%
1717
(32000)
Belle Terre Pkwy

(XXXXX)	2025 AADT
XXXX	2025 DDHV
K ML =	9.00%
K SS =	9.00%

D Factors
59.0% NB
41.0% SB
61.0% WB

DESIGN HOUR TURNING MOVEMENTS IN YEAR 2030

Belle Terre Pkwy
(33000)
1218
0.0% 0 | 89.9% 1095 | 10.1% 123

Parkview Dr (S) - AM
206 43.6%
0 0.0% 472 (8600)
266 56.4%

0.0% 0
0 0 0.0% 0
0.0% 0

Parkview Dr (S) - AM

0 | 0.0% | 1664 89.5% | 195 10.5%
1859
(35000)
Belle Terre Pkwy

(XXXXX)	2030 AADT
XXXX	2030 DDHV
K ML =	9.00%
K SS =	9.00%

D Factors
59.0% NB
41.0% SB
61.0% WB

PROJECT TRAFFIC FOR Belle Terre Pkwy AT Parkview Dr (S) - AM

2015 INPUT TMCs COMPARED TO 2015 DHV

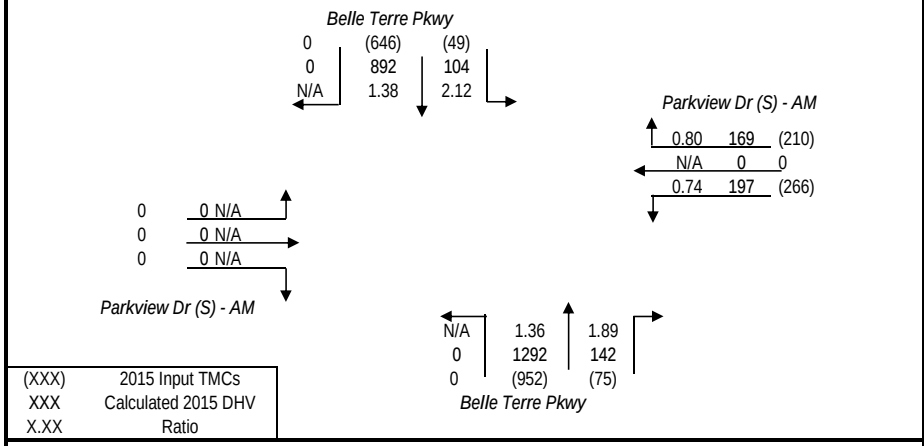

2015 INPUT TMCs COMPARED TO 2020 DHV

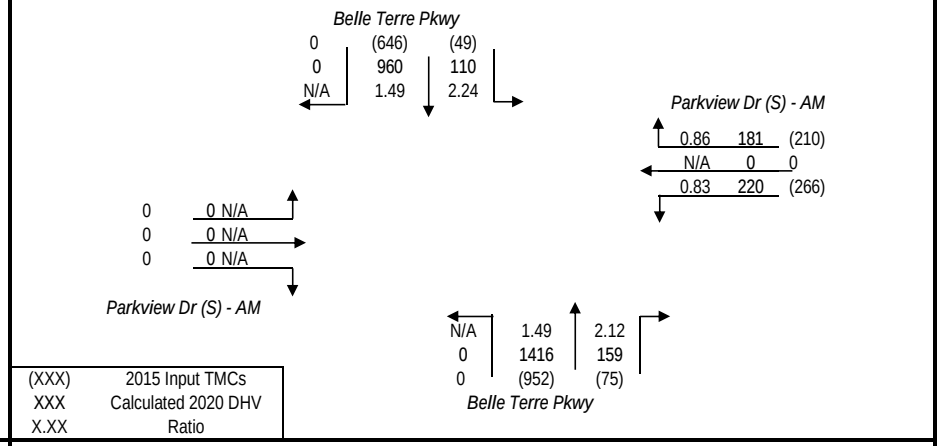

2015 INPUT TMCs COMPARED TO 2025 DHV

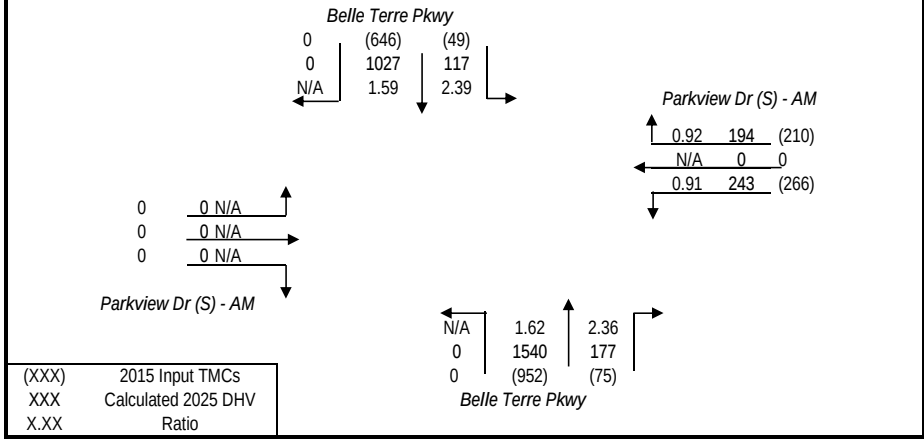

2015 INPUT TMCs COMPARED TO 2030 DHV

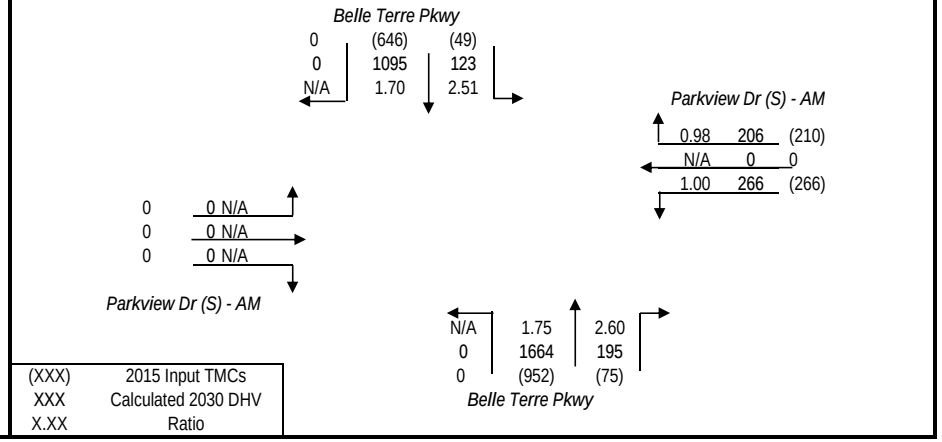

TURNS5 ANALYSIS SHEET - INPUT

Analyst:	-
Date:	13-Nov-15
Highway:	Belle Terre Pkwy
Intersection:	Parkview Dr (N) - AM
Project:	Belle Terre Blvd/Pkwy Intersection Analysis
County:	Flagler

Is this a 4 way intersection?

- ○ Yes, my intersection has four approaches

If not, which 3 approaches exist in the intersection?

- ○ EB, WB, and SB
- ○ EB, WB, and NB
- ○ EB, SB, and NB
- ◉ WB, SB, and NB

Is the Mainline Oriented North/South? (Enter Yes or No)

- ◉ Yes
- ○ No

K Factors	
Mainline	9.00%
Side street	9.00%

D Factors	*Mainline*
Northbound (NB)	59.0%
Southbound (SB)	41.0%
	Side street
Westbound (WB)	61.0%
Eastbound (EB)	0.0%

Do you have FTSUTMS Model Year traffic from which you would like to interpolate/extrapolate for project years? (Y/N) (Enter Yes or No)

- ◉ Yes
- ○ No

If "Yes" go to cell C47 If "No" go to cell C31

Enter Year and Growth Rates from Base Year:

	Year	*Rate* (1.0% = 0.01) Mainline	Side Street
Base	2015	0.00%	0.00%
Opening	2025		
Mid	2035		
Design	2045		

Mainline Growth Function

- ◉ Linear
- ○ Exponential
- ○ Decaying

Side Street Growth Function

- ◉ Linear
- ○ Exponential
- ○ Decaying

Enter Base Year AADTs for Volume Comparison:
(growth rates are used to calculate other project years)

From West: EB Approach	*From East: WB Approach*	*From North: SB Approach*	*From South: NB Approach*	***TOTAL***
0	0	0	0	0

Enter Project and Model Years

	Year
Base	2015
Opening	2020
Mid	2025
Design	2030
Model	2030

Enter Base and Model Year AADTs for Volume Comparison:
(volumes for other project years are calculated by interpolation)

	From West: EB Approach	*From East: WB Approach*	*From North: SB Approach*	*From South: NB Approach*	***TOTAL***
2015	0	3433	25000	27000	55433
2030	0	4400	32000	33000	69400

		1st Guess Turning %'s for AADT Balancing	**Actual/Counted Traffic for 2015**
(EB LT)	*West-to-North*	0.0%	0
(EB THRU)	*West-to-East*	0.0%	0
(EB RT)	*West-to-South*	0.0%	0
(WB LT)	*East-to-South*	18.4%	27
(WB THRU)	*East-to-West*	0.0%	0
(WB RT)	*East-to-North*	81.6%	120
(SB LT)	*North-to-East*	10.5%	78
(SB THRU)	*North-to-South*	89.5%	668
(SB RT)	*North-to-West*	0.0%	0
(NB LT)	*South-to-West*	0.0%	0
(NB THRU)	*South-to-North*	98.6%	1146
(NB RT)	*South-to-East*	1.4%	16

Desired Closure: 1.00

Existing Year AADTs

Existing Turning Movement Counts

FSUTMS Model Year AADTs

First Guess Turning % Option Used
Existing Turning Movement Counts

Only the existing year total departure volumes [AADT*K*(1-D)] will be used to calculate the turning percentages first guess.

The turning percentages first guess is the same as the ***actual distribution of turning volumes entered***. No balancing technique is used.

Only the FSUTMS model year departure volumes [AADT*K*(1-D)] will be used to calculate the turning percentages first guess.

PROJECT TRAFFIC FOR Belle Terre Pkwy AT Parkview Dr (N) - AM

DESIGN HOUR TURNING MOVEMENTS IN YEAR 2015

Belle Terre Pkwy
(25000)
923
0.0% 0 | 95.7% 883 | 4.3% 40

Parkview Dr (N) - AM
52 27.5%
0 0.0% 188 (3400)
136 72.5%

0.0% 0
0 0 0.0% 0
0.0% 0

Parkview Dr (N) - AM

0 | 0.0% 1348 | 86 6.0%
1434
(27000)
Belle Terre Pkwy

(XXXXX)	2015 AADT
XXXX	2015 DDHV
K ML =	9.00%
K SS =	9.00%

D Factors
59.0% NB
41.0% SB
61.0% WB

DESIGN HOUR TURNING MOVEMENTS IN YEAR 2020

Belle Terre Pkwy
(27000)
1009
0.0% 0 | 94.7% 956 | 5.3% 53

Parkview Dr (N) - AM
70 34.2%
0 0.0% 206 (3800)
136 65.8%

0.0% 0
0 0 0.0% 0
0.0% 0

Parkview Dr (N) - AM

0 | 0.0% 1457 | 83 5.4%
1540
(29000)
Belle Terre Pkwy

(XXXXX)	2020 AADT
XXXX	2020 DDHV
K ML =	9.00%
K SS =	9.00%

D Factors
59.0% NB
41.0% SB
61.0% WB

DESIGN HOUR TURNING MOVEMENTS IN YEAR 2025

Belle Terre Pkwy
(30000)
1095
0.0% 0 | 94.0% 1029 | 6.0% 66

Parkview Dr (N) - AM
89 39.8%
0 0.0% 224 (4100)
135 60.2%

0.0% 0
0 0 0.0% 0
0.0% 0

Parkview Dr (N) - AM

0 | 0.0% 1564 | 82 5.0%
1646
(31000)
Belle Terre Pkwy

(XXXXX)	2025 AADT
XXXX	2025 DDHV
K ML =	9.00%
K SS =	9.00%

D Factors
59.0% NB
41.0% SB
61.0% WB

DESIGN HOUR TURNING MOVEMENTS IN YEAR 2030

Belle Terre Pkwy
(32000)
1181
0.0% 0 | 93.3% 1102 | 6.7% 79

Parkview Dr (N) - AM
108 44.8%
0 0.0% 242 (4400)
134 55.2%

0.0% 0
0 0 0.0% 0
0.0% 0

Parkview Dr (N) - AM

0 | 0.0% 1673 | 79 4.5%
1752
(33000)
Belle Terre Pkwy

(XXXXX)	2030 AADT
XXXX	2030 DDHV
K ML =	9.00%
K SS =	9.00%

D Factors
59.0% NB
41.0% SB
61.0% WB

PROJECT TRAFFIC FOR Belle Terre Pkwy AT Parkview Dr (N) - AM

2015 INPUT TMCs COMPARED TO 2015 DHV

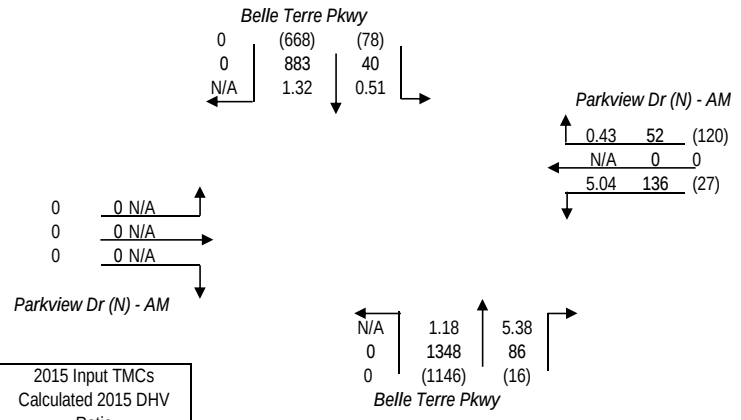

(XXX)	2015 Input TMCs
XXX	Calculated 2015 DHV
X.XX	Ratio

2015 INPUT TMCs COMPARED TO 2020 DHV

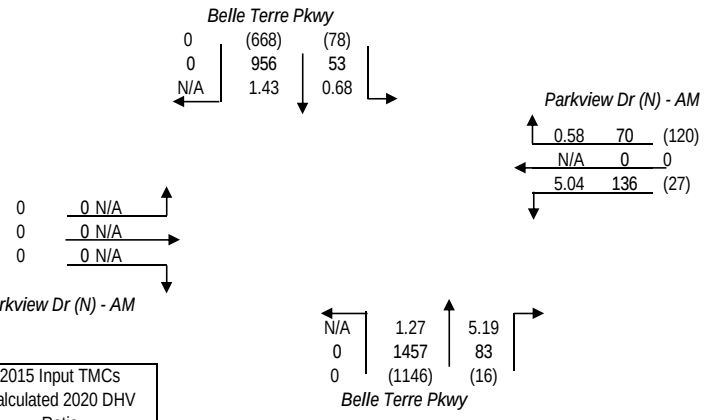

(XXX)	2015 Input TMCs
XXX	Calculated 2020 DHV
X.XX	Ratio

2015 INPUT TMCs COMPARED TO 2025 DHV

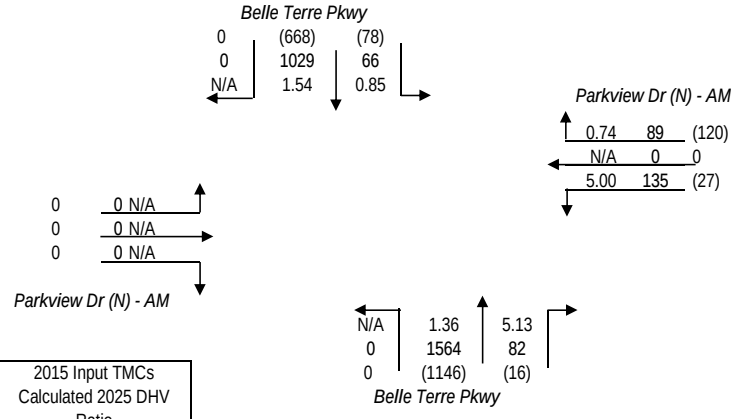

(XXX)	2015 Input TMCs
XXX	Calculated 2025 DHV
X.XX	Ratio

2015 INPUT TMCs COMPARED TO 2030 DHV

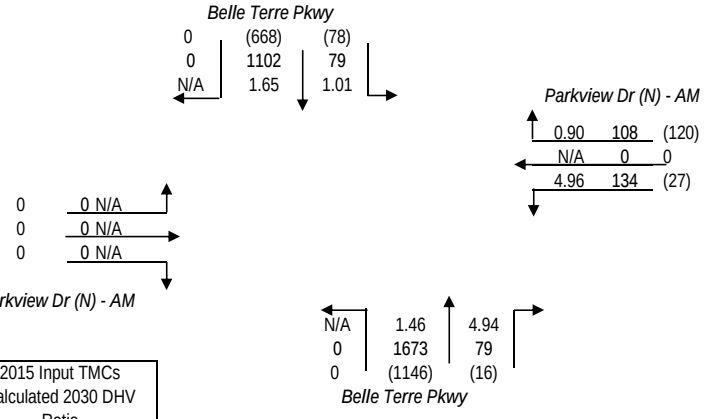

(XXX)	2015 Input TMCs
XXX	Calculated 2030 DHV
X.XX	Ratio

TURNS5 ANALYSIS SHEET - INPUT

Analyst:	-
Date:	13-Nov-15
Highway:	Belle Terre Pkwy
Intersection:	Pine Lakes Pkwy - AM
Project:	Belle Terre Blvd/Pkwy Intersection Analysis
County:	Flagler

Is this a 4 way intersection?

- ○ Yes, my intersection has four approaches

If not, which 3 approaches exist in the intersection?

- ○ EB, WB, and SB
- ○ EB, WB, and NB
- ◉ EB, SB, and NB
- ○ WB, SB, and NB

Is the Mainline Oriented North/South? (Enter Yes or No)

- ◉ Yes
- ○ No

K Factors	
Mainline	9.00%
Side street	9.00%

D Factors	*Mainline*
Northbound (NB)	59.0%
Southbound (SB)	41.0%
	Side street
Westbound (WB)	0.0%
Eastbound (EB)	61.0%

Do you have FTSUTMS Model Year traffic from which you would like to interpolate/extrapolate for project years? (Y/N) (Enter Yes or No)

- ◉ Yes
- ○ No

If "Yes" go to cell C47 If "No" go to cell C31

Enter Year and Growth Rates from Base Year:

	Year	*Rate* (1.0% = 0.01) Mainline	Side Street
Base	2015	0.00%	0.00%
Opening	2025		
Mid	2035		
Design	2045		

Mainline Growth Function

- ◉ Linear
- ○ Exponential
- ○ Decaying

Side Street Growth Function

- ◉ Linear
- ○ Exponential
- ○ Decaying

Enter Base Year AADTs for Volume Comparison:
(growth rates are used to calculate other project years)

From West: EB Approach	*From East: WB Approach*	*From North: SB Approach*	*From South: NB Approach*	***TOTAL***
0	0	0	0	0

Enter Project and Model Years

	Year
Base	2015
Opening	2020
Mid	2025
Design	2030
Model	2030

Enter Base and Model Year AADTs for Volume Comparison:
(volumes for other project years are calculated by interpolation)

	From West: EB Approach	*From East: WB Approach*	*From North: SB Approach*	*From South: NB Approach*	***TOTAL***
2015	3900	0	25000	25000	53900
2030	7300	0	32000	32000	71300

		1st Guess Turning %'s for AADT Balancing	**Actual/Counted Traffic for 2015**
(EB LT)	*West-to-North*	80.5%	417
(EB THRU)	*West-to-East*	0.0%	0
(EB RT)	*West-to-South*	19.5%	101
(WB LT)	*East-to-South*	0.0%	0
(WB THRU)	*East-to-West*	0.0%	0
(WB RT)	*East-to-North*	0.0%	0
(SB LT)	*North-to-East*	0.0%	0
(SB THRU)	*North-to-South*	79.3%	645
(SB RT)	*North-to-West*	20.7%	168
(NB LT)	*South-to-West*	6.2%	79
(NB THRU)	*South-to-North*	93.8%	1187
(NB RT)	*South-to-East*	0.0%	0

Desired Closure: 1.00

Existing Year AADTs

Existing Turning Movement Counts

FSUTMS Model Year AADTs

First Guess Turning % Option Used
Existing Turning Movement Counts

Only the existing year total departure volumes [AADT*K*(1-D)] will be used to calculate the turning percentages first guess.

The turning percentages first guess is the same as the ***actual distribution of turning volumes entered***. No balancing technique is used.

Only the FSUTMS model year departure volumes [AADT*K*(1-D)] will be used to calculate the turning percentages first guess.

PROJECT TRAFFIC FOR Belle Terre Pkwy AT Pine Lakes Pkwy - AM

DESIGN HOUR TURNING MOVEMENTS IN YEAR 2015

Belle Terre Pkwy
(25000)
923
8.4% 78 | 91.6% 845 | 0.0% 0

Pine Lakes Pkwy - AM
0 0.0%
0 0.0% 0 0
0 0.0%

66.2% 142
(3900) 214 0.0% 0
33.8% 72

Pine Lakes Pkwy - AM

62 | 1266 | 0
4.7% | 95.3% | 0.0%
1328
(25000)
Belle Terre Pkwy

(XXXXX)	2015 AADT	
XXXX	2015 DDHV	
K ML =	9.00%	
K SS =	9.00%	

D Factors
59.0% NB
41.0% SB
61.0% EB

DESIGN HOUR TURNING MOVEMENTS IN YEAR 2020

Belle Terre Pkwy
(27000)
1009
9.5% 96 | 90.5% 913 | 0.0% 0

Pine Lakes Pkwy - AM
0 0.0%
0 0.0% 0 0
0 0.0%

63.2% 174
(5000) 276 0.0% 0
36.8% 102

Pine Lakes Pkwy - AM

87 | 1364 | 0
6.0% | 94.0% | 0.0%
1451
(27000)
Belle Terre Pkwy

(XXXXX)	2020 AADT	
XXXX	2020 DDHV	
K ML =	9.00%	
K SS =	9.00%	

D Factors
59.0% NB
41.0% SB
61.0% EB

DESIGN HOUR TURNING MOVEMENTS IN YEAR 2025

Belle Terre Pkwy
(30000)
1095
10.5% 115 | 89.5% 980 | 0.0% 0

Pine Lakes Pkwy - AM
0 0.0%
0 0.0% 0 0
0 0.0%

62.1% 211
(6200) 339 0.0% 0
37.9% 128

Pine Lakes Pkwy - AM

109 | 1466 | 0
6.9% | 93.1% | 0.0%
1575
(30000)
Belle Terre Pkwy

(XXXXX)	2025 AADT	
XXXX	2025 DDHV	
K ML =	9.00%	
K SS =	9.00%	

D Factors
59.0% NB
41.0% SB
61.0% EB

DESIGN HOUR TURNING MOVEMENTS IN YEAR 2030

Belle Terre Pkwy
(32000)
1181
11.4% 135 | 88.6% 1046 | 0.0% 0

Pine Lakes Pkwy - AM
0 0.0%
0 0.0% 0 0
0 0.0%

61.4% 246
(7300) 401 0.0% 0
38.6% 155

Pine Lakes Pkwy - AM

133 | 1566 | 0
7.8% | 92.2% | 0.0%
1699
(32000)
Belle Terre Pkwy

(XXXXX)	2030 AADT	
XXXX	2030 DDHV	
K ML =	9.00%	
K SS =	9.00%	

D Factors
59.0% NB
41.0% SB
61.0% EB

PROJECT TRAFFIC FOR Belle Terre Pkwy AT Pine Lakes Pkwy - AM

2015 INPUT TMCs COMPARED TO 2015 DHV

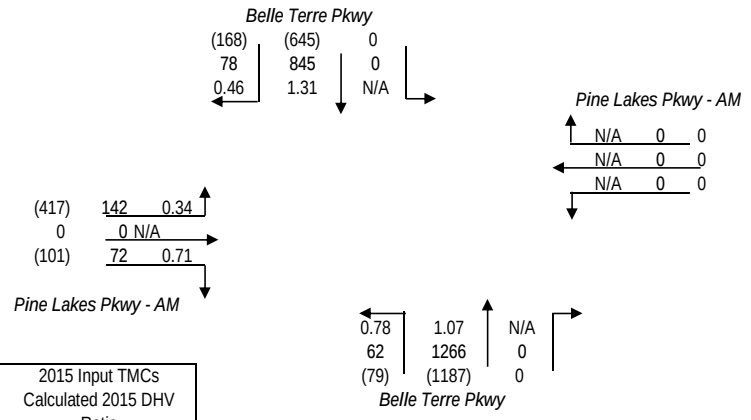

(XXX)	2015 Input TMCs
XXX	Calculated 2015 DHV
X.XX	Ratio

2015 INPUT TMCs COMPARED TO 2020 DHV

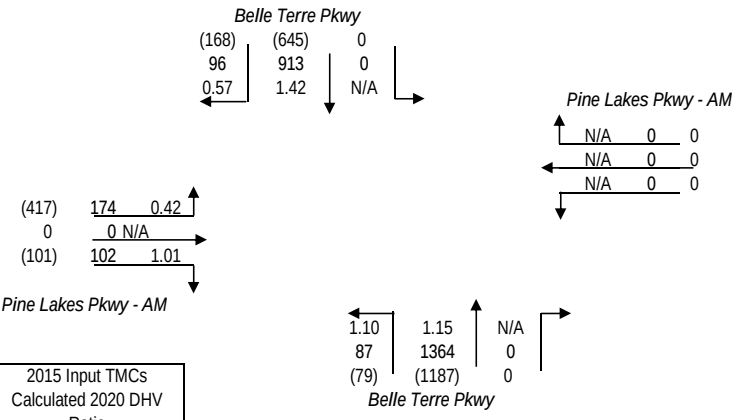

(XXX)	2015 Input TMCs
XXX	Calculated 2020 DHV
X.XX	Ratio

2015 INPUT TMCs COMPARED TO 2025 DHV

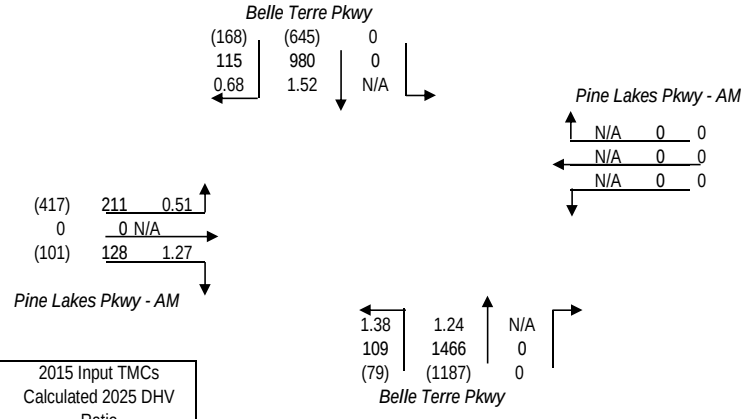

(XXX)	2015 Input TMCs
XXX	Calculated 2025 DHV
X.XX	Ratio

2015 INPUT TMCs COMPARED TO 2030 DHV

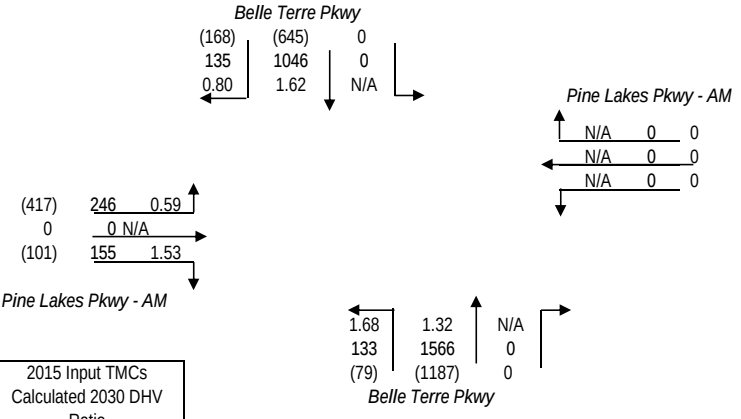

(XXX)	2015 Input TMCs
XXX	Calculated 2030 DHV
X.XX	Ratio

TURNS5 ANALYSIS SHEET - INPUT

Analyst:	-
Date:	13-Nov-15
Highway:	Belle Terre Blvd- PM
Intersection:	US-1
Project:	Belle Terre Blvd/Pkwy Intersection Analysis
County:	Flagler

Is this a 4 way intersection?

- ○ Yes, my intersection has four approaches

If not, which 3 approaches exist in the intersection?

- ○ EB, WB, and SB
- ○ EB, WB, and NB
- ○ EB, SB, and NB
- ◉ WB, SB, and NB

Is the Mainline Oriented North/South? (Enter Yes or No)

- ○ Yes
- ◉ No

K Factors	Mainline	**D Factors**	*Mainline*
	9.00%	Westbound (WB)	41.0%
	Side street	Eastbound (EB)	0.0%
	9.00%		*Side street*
		Northbound (NB)	61.0%
		Southbound (SB)	39.0%

Do you have FTSUTMS Model Year traffic from which you would like to interpolate/extrapolate for project years? (Y/N) (Enter Yes or No)

- ◉ Yes
- ○ No

If "Yes" go to cell C47 — If "No" go to cell C31

Enter Year and Growth Rates from Base Year:

	Year	*Rate* (1.0% = 0.01) Mainline	Side Street
Base	2015	0.00%	0.00%
Opening	2025		
Mid	2035		
Design	2045		

Mainline Growth Function
- ◉ Linear
- ○ Exponential
- ○ Decaying

Side Street Growth Function
- ◉ Linear
- ○ Exponential
- ○ Decaying

Enter Base Year AADTs for Volume Comparison:
(growth rates are used to calculate other project years)

From West: EB Approach	*From East: WB Approach*	*From North: SB Approach*	*From South: NB Approach*	***TOTAL***
0	0	0	0	0

Enter Project and Model Years

	Year
Base	2015
Opening	2020
Mid	2025
Design	2030
Model	2030

Enter Base and Model Year AADTs for Volume Comparison:
(volumes for other project years are calculated by interpolation)

	From West: EB Approach	*From East: WB Approach*	*From North: SB Approach*	*From South: NB Approach*	***TOTAL***
2015	0	3900	9700	13600	27200
2030	0	7100	19000	26000	52100

		1st Guess Turning %'s for AADT Balancing	**Actual/Counted Traffic for 2015**
(EB LT)	*West-to-North*	0.0%	0
(EB THRU)	*West-to-East*	0.0%	0
(EB RT)	*West-to-South*	0.0%	0
(WB LT)	*East-to-South*	78.0%	71
(WB THRU)	*East-to-West*	0.0%	0
(WB RT)	*East-to-North*	22.0%	20
(SB LT)	*North-to-East*	7.6%	35
(SB THRU)	*North-to-South*	92.4%	425
(SB RT)	*North-to-West*	0.0%	0
(NB LT)	*South-to-West*	0.0%	0
(NB THRU)	*South-to-North*	86.2%	535
(NB RT)	*South-to-East*	13.8%	86

Desired Closure: 3.00

Existing Year AADTs

Existing Turning Movement Counts

FSUTMS Model Year AADTs

First Guess Turning % Option Used
Existing Turning Movement Counts

Only the existing year total departure volumes [AADT*K*(1-D)] will be used to calculate the turning percentages first guess.

The turning percentages first guess is the same as the ***actual distribution of turning volumes entered***. No balancing technique is used.

Only the FSUTMS model year departure volumes [AADT*K*(1-D)] will be used to calculate the turning percentages first guess.

PROJECT TRAFFIC FOR Belle Terre Blvd- PM AT US-1

DESIGN HOUR TURNING MOVEMENTS IN YEAR 2015

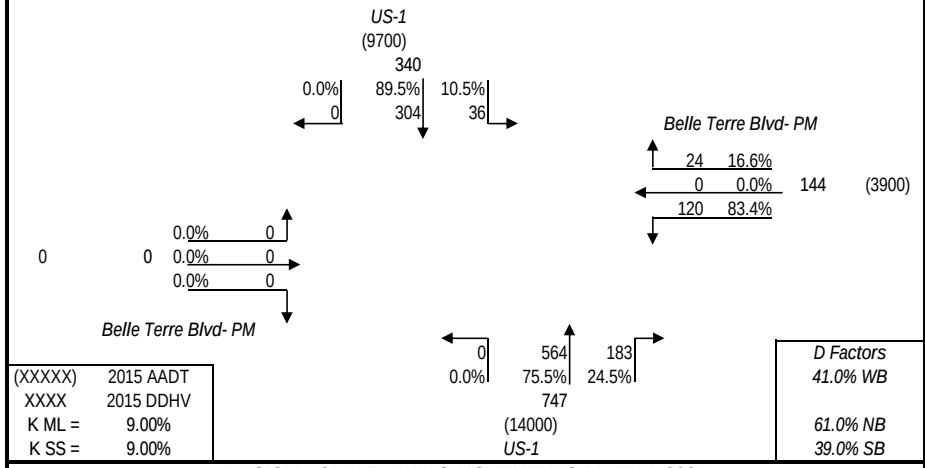

(XXXXX)	2015 AADT
XXXX	2015 DDHV
K ML =	9.00%
K SS =	9.00%

D Factors
41.0% WB
61.0% NB
39.0% SB

DESIGN HOUR TURNING MOVEMENTS IN YEAR 2020

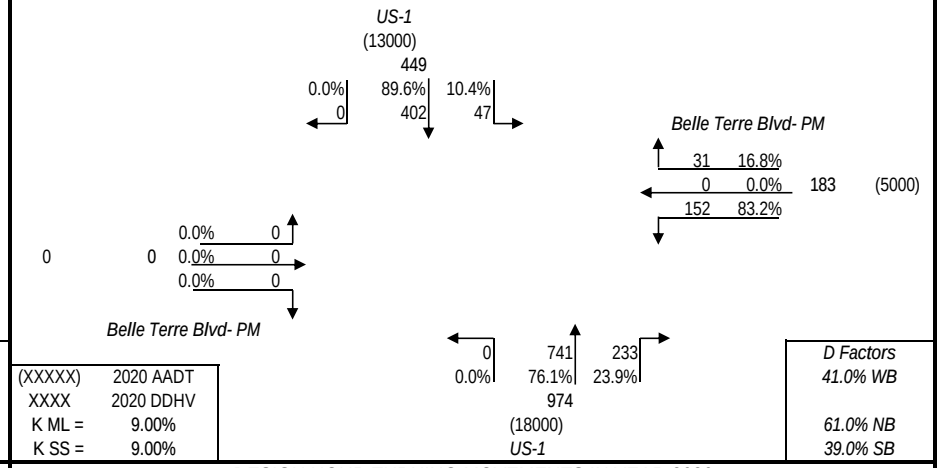

(XXXXX)	2020 AADT
XXXX	2020 DDHV
K ML =	9.00%
K SS =	9.00%

D Factors
41.0% WB
61.0% NB
39.0% SB

DESIGN HOUR TURNING MOVEMENTS IN YEAR 2025

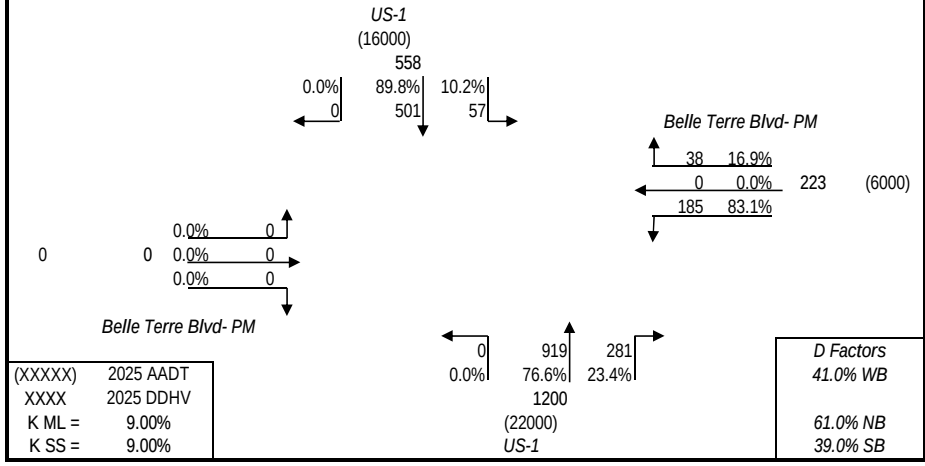

(XXXXX)	2025 AADT
XXXX	2025 DDHV
K ML =	9.00%
K SS =	9.00%

D Factors
41.0% WB
61.0% NB
39.0% SB

DESIGN HOUR TURNING MOVEMENTS IN YEAR 2030

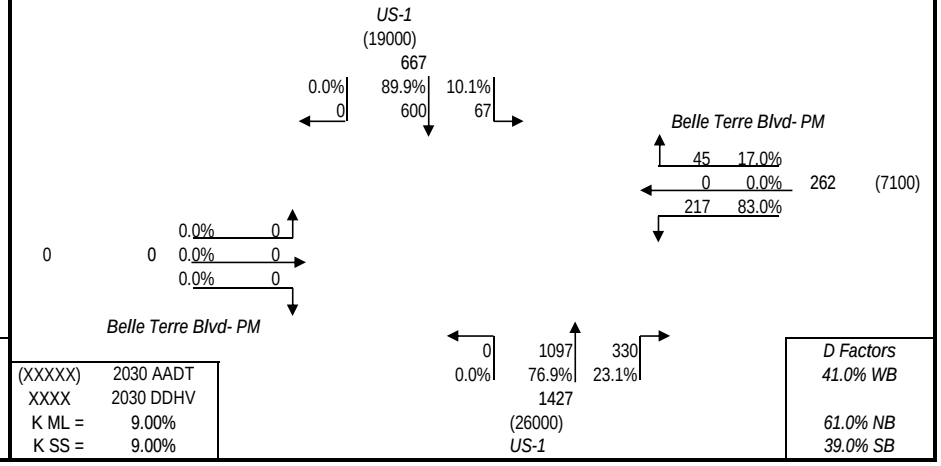

(XXXXX)	2030 AADT
XXXX	2030 DDHV
K ML =	9.00%
K SS =	9.00%

D Factors
41.0% WB
61.0% NB
39.0% SB

PROJECT TRAFFIC FOR Belle Terre Blvd- PM AT US-1

2015 INPUT TMCs COMPARED TO 2015 DHV

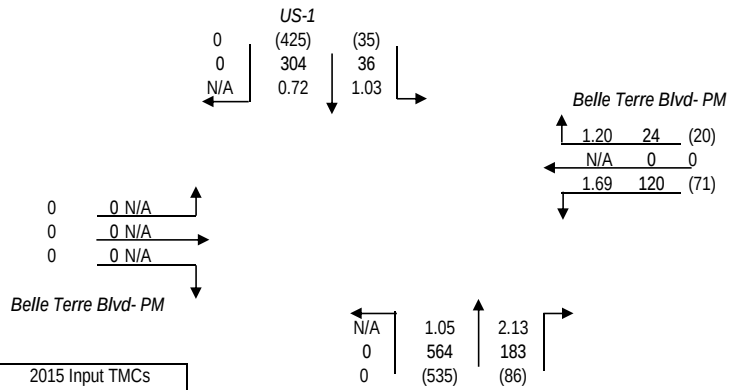

(XXX)	2015 Input TMCs
XXX	Calculated 2015 DHV
X.XX	Ratio

2015 INPUT TMCs COMPARED TO 2020 DHV

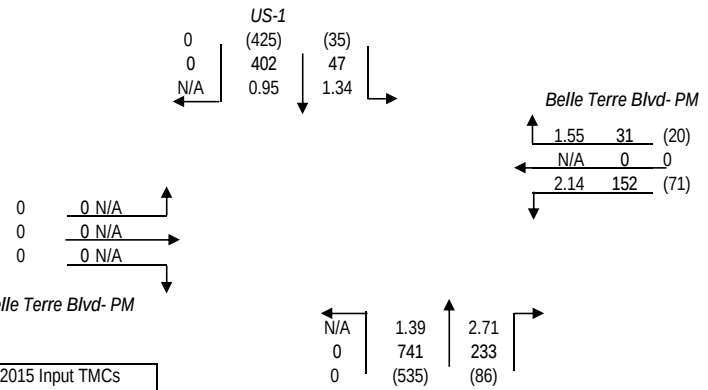

(XXX)	2015 Input TMCs
XXX	Calculated 2020 DHV
X.XX	Ratio

2015 INPUT TMCs COMPARED TO 2025 DHV

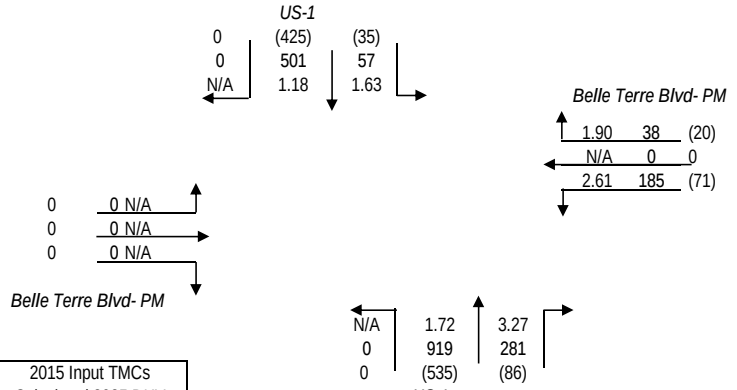

(XXX)	2015 Input TMCs
XXX	Calculated 2025 DHV
X.XX	Ratio

2015 INPUT TMCs COMPARED TO 2030 DHV

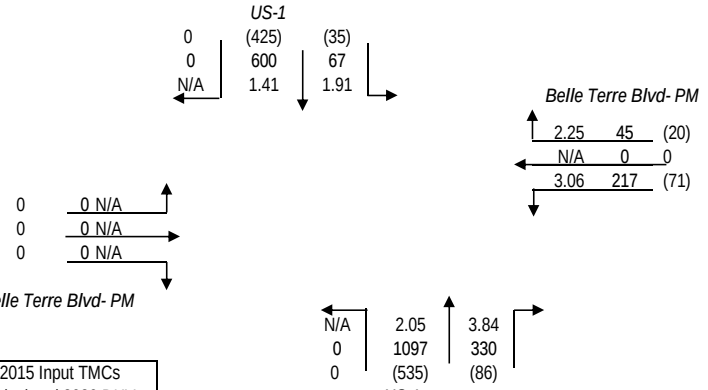

(XXX)	2015 Input TMCs
XXX	Calculated 2030 DHV
X.XX	Ratio

TURNS5 ANALYSIS SHEET - INPUT

Analyst:	-
Date:	17-Nov-15
Highway:	Belle Terre Blvd
Intersection:	Kaywood Pl/Kankakee Tr- PM
Project:	Belle Terre Blvd/Pkwy Intersection Analysis
County:	Flagler

Is this a 4 way intersection?

- (●) Yes, my intersection has four approaches

If not, which 3 approaches exist in the intersection?

- ( ) EB, WB, and SB
- ( ) EB, WB, and NB
- ( ) EB, SB, and NB
- ( ) WB, SB, and NB

Is the Mainline Oriented North/South? Enter Yes or No

- (●) Yes
- ( ) No

K Factors	Mainline	**D Factors**	*Mainline*
	9.00%	Northbound (NB)	59.0%
	Side street	Southbound (SB)	41.0%
	9.00%		*Side street*
		Westbound (WB)	39.0%
		Eastbound (EB)	61.0%

Do you have FTSUTMS Model Year traffic from which you would like to interpolate/extrapolate for project years? (Y/N)

Enter Yes or No

- (●) Yes
- ( ) No

If "Yes" go to cell C47 — If "No" go to cell C31

Enter Year and Growth Rates from Base Year:

	Year	*Rate* (1.0% = 0.01) **Mainline**	**Side Street**
Base	2015	0.00%	0.00%
Opening	2025		
Mid	2035		
Design	2045		

Mainline Growth Function

- (●) Linear
- ( ) Exponential
- ( ) Decaying

Side Street Growth Function

- (●) Linear
- ( ) Exponential
- ( ) Decaying

Enter Base Year AADTs for Volume Comparison:

(growth rates are used to calculate other project years)

From West: EB Approach	*From East: WB Approach*	*From North: SB Approach*	*From South: NB Approach*	***TOTAL***
0	0	0	0	0

Enter Project and Model Years

	Year
Base	2015
Opening	2020
Mid	2025
Design	2030
Model	2030

Enter Base and Model Year AADTs for Volume Comparison:

(volumes for other project years are calculated by interpolation)

	From West: EB Approach	*From East: WB Approach*	*From North: SB Approach*	*From South: NB Approach*	***TOTAL***
2015	788	133	4000	3900	8821
2030	1000	170	7100	7100	15370

First Guess Turning % Option Used
Existing Turning Movement Counts

		1st Guess Turning %'s for AADT Balancing	**Actual/Counted Traffic for 2015**
(EB LT)	*West-to-North*	87.0%	20
(EB THRU)	*West-to-East*	0.0%	0
(EB RT)	*West-to-South*	13.0%	3
(WB LT)	*East-to-South*	50.0%	2
(WB THRU)	*East-to-West*	0.0%	0
(WB RT)	*East-to-North*	50.0%	2
(SB LT)	*North-to-East*	1.7%	2
(SB THRU)	*North-to-South*	72.2%	86
(SB RT)	*North-to-West*	26.1%	31
(NB LT)	*South-to-West*	7.7%	17
(NB THRU)	*South-to-North*	89.6%	198
(NB RT)	*South-to-East*	2.7%	6

Desired Closure: 1.00

Existing Year AADTs — Only the existing year total departure volumes [AADT*K*(1-D)] will be used to calculate the turning percentages first guess.

Existing Turning Movement Counts — The turning percentages first guess is the same as the ***actual distribution of turning volumes entered***. No balancing technique is used.

FSUTMS Model Year AADTs — Only the FSUTMS model year departure volumes [AADT*K*(1-D)] will be used to calculate the turning percentages first guess.

PROJECT TRAFFIC FOR Belle Terre Blvd AT Kaywood Pl/Kankakee Tr- PM

DESIGN HOUR TURNING MOVEMENTS IN YEAR 2015

Belle Terre Blvd
(4000)
148
14.4% 21 | 83.6% 124 | 2.0% 3

Kaywood Pl/Kankakee Tr- PM
3 58.5%
0 0.0% 5 (130)
2 41.5%

(790) 43
90.4% 39
0.0% 0
9.6% 4

Kaywood Pl/Kankakee Tr- PM

6 | 197 | 4
2.8% | 95.1% | 2.1%
207
(3900)
Belle Terre Blvd

(XXXXX)	2015 AADT
XXXX	2015 DDHV
K ML =	9.00%
K SS =	9.00%

D Factors
59.0% NB
41.0% SB
39.0% WB
61.0% EB

DESIGN HOUR TURNING MOVEMENTS IN YEAR 2020

Belle Terre Blvd
(5000)
186
12.3% 23 | 85.9% 160 | 1.8% 3

Kaywood Pl/Kankakee Tr- PM
3 58.7%
0 0.0% 5 (150)
2 41.3%

(860) 47
90.5% 43
0.0% 0
9.5% 4

Kaywood Pl/Kankakee Tr- PM

6 | 253 | 5
2.3% | 95.9% | 1.8%
264
(5000)
Belle Terre Blvd

(XXXXX)	2020 AADT
XXXX	2020 DDHV
K ML =	9.00%
K SS =	9.00%

D Factors
59.0% NB
41.0% SB
39.0% WB
61.0% EB

DESIGN HOUR TURNING MOVEMENTS IN YEAR 2025

Belle Terre Blvd
(6100)
224
11.2% 25 | 87.1% 195 | 1.7% 4

Kaywood Pl/Kankakee Tr- PM
4 58.6%
0 0.0% 6 (160)
2 41.4%

(930) 51
90.5% 46
0.0% 0
9.5% 5

Kaywood Pl/Kankakee Tr- PM

7 | 308 | 5
2.1% | 96.2% | 1.7%
320
(6000)
Belle Terre Blvd

(XXXXX)	2025 AADT
XXXX	2025 DDHV
K ML =	9.00%
K SS =	9.00%

D Factors
59.0% NB
41.0% SB
39.0% WB
61.0% EB

DESIGN HOUR TURNING MOVEMENTS IN YEAR 2030

Belle Terre Blvd
(7100)
262
10.2% 27 | 88.3% 231 | 1.5% 4

Kaywood Pl/Kankakee Tr- PM
4 58.7%
0 0.0% 6 (170)
2 41.3%

(1000) 55
90.5% 50
0.0% 0
9.5% 5

Kaywood Pl/Kankakee Tr- PM

7 | 365 | 5
1.9% | 96.7% | 1.4%
377
(7100)
Belle Terre Blvd

(XXXXX)	2030 AADT
XXXX	2030 DDHV
K ML =	9.00%
K SS =	9.00%

D Factors
59.0% NB
41.0% SB
39.0% WB
61.0% EB

PROJECT TRAFFIC FOR Belle Terre Blvd AT Kaywood Pl/Kankakee Tr- PM

2015 INPUT TMCs COMPARED TO 2015 DHV

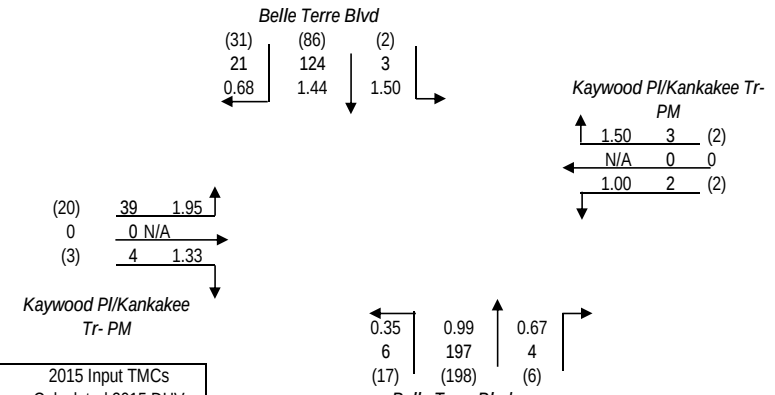

(XXX)	2015 Input TMCs
XXX	Calculated 2015 DHV
X.XX	Ratio

2015 INPUT TMCs COMPARED TO 2020 DHV

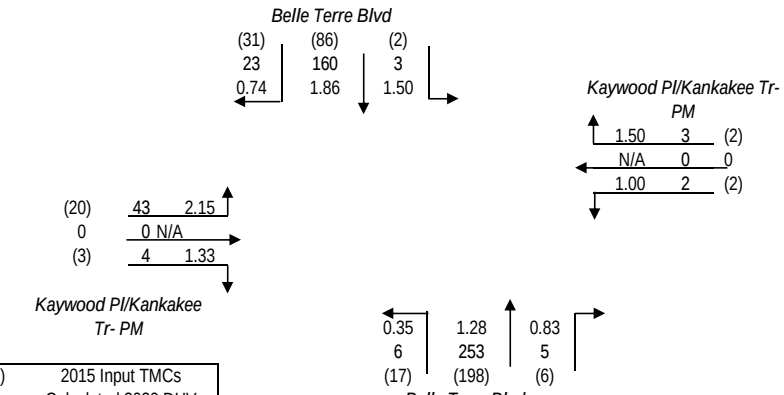

(XXX)	2015 Input TMCs
XXX	Calculated 2020 DHV
X.XX	Ratio

2015 INPUT TMCs COMPARED TO 2025 DHV

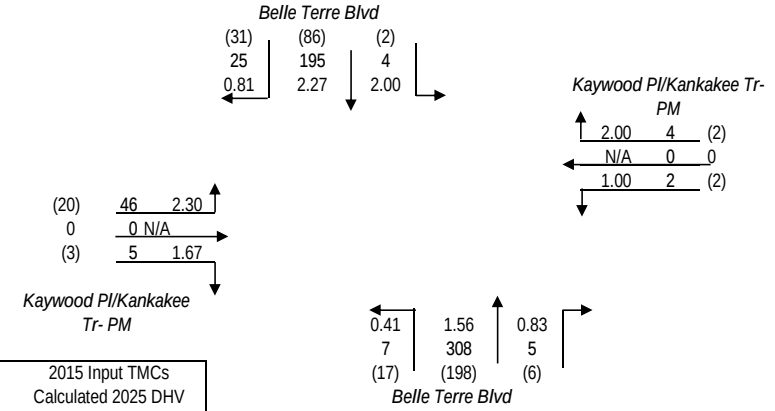

(XXX)	2015 Input TMCs
XXX	Calculated 2025 DHV
X.XX	Ratio

2015 INPUT TMCs COMPARED TO 2030 DHV

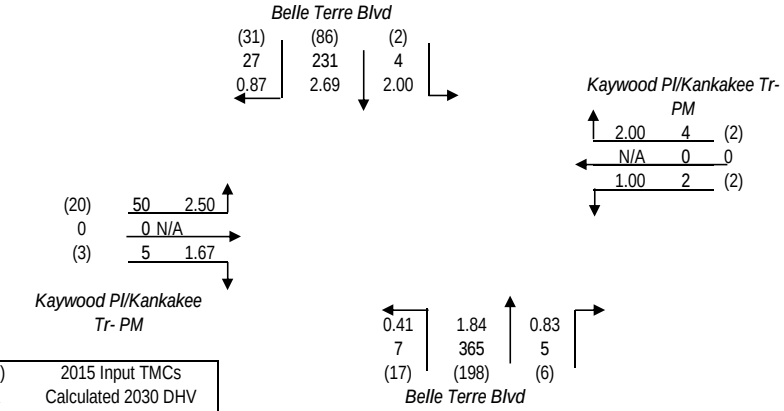

(XXX)	2015 Input TMCs
XXX	Calculated 2030 DHV
X.XX	Ratio

TURNS5 ANALYSIS SHEET - INPUT

Analyst:	-
Date:	13-Nov-15
Highway:	Belle Terre Blvd
Intersection:	Kathleen Tr (S)- PM
Project:	Belle Terre Blvd/Pkwy Intersection Analysis
County:	Flagler

Is this a 4 way intersection?

- ○ Yes, my intersection has four approaches

If not, which 3 approaches exist in the intersection?

- ○ EB, WB, and SB
- ○ EB, WB, and NB
- ○ EB, SB, and NB
- ◉ WB, SB, and NB

Is the Mainline Oriented North/South? (Enter Yes or No)

- ◉ Yes
- ○ No

K Factors	
Mainline	9.00%
Side street	9.00%

D Factors	*Mainline*
Northbound (NB)	59.0%
Southbound (SB)	41.0%
	Side street
Westbound (WB)	39.0%
Eastbound (EB)	0.0%

Do you have FTSUTMS Model Year traffic from which you would like to interpolate/extrapolate for project years? (Y/N) (Enter Yes or No)

- ◉ Yes
- ○ No

If "Yes" go to cell C47 If "No" go to cell C31

Enter Year and Growth Rates from Base Year:

	Year	*Rate* (1.0% = 0.01) Mainline	Side Street
Base	2015	0.00%	0.00%
Opening	2025		
Mid	2035		
Design	2045		

Mainline Growth Function

- ◉ Linear
- ○ Exponential
- ○ Decaying

Side Street Growth Function

- ◉ Linear
- ○ Exponential
- ○ Decaying

Enter Base Year AADTs for Volume Comparison:
(growth rates are used to calculate other project years)

From West: EB Approach	*From East: WB Approach*	*From North: SB Approach*	*From South: NB Approach*	***TOTAL***
0	0	0	0	0

Enter Project and Model Years

	Year
Base	2015
Opening	2020
Mid	2025
Design	2030
Model	2030

Enter Base and Model Year AADTs for Volume Comparison:
(volumes for other project years are calculated by interpolation)

	From West: EB Approach	*From East: WB Approach*	*From North: SB Approach*	*From South: NB Approach*	***TOTAL***
2015	0	233	4200	4000	8433
2030	0	300	7500	7100	14900

First Guess Turning % Option Used
Existing Turning Movement Counts

		1st Guess Turning %'s for AADT Balancing	**Actual/Counted Traffic for 2015**
(EB LT)	*West-to-North*	0.0%	0
(EB THRU)	*West-to-East*	0.0%	0
(EB RT)	*West-to-South*	0.0%	0
(WB LT)	*East-to-South*	60.0%	3
(WB THRU)	*East-to-West*	0.0%	0
(WB RT)	*East-to-North*	40.0%	2
(SB LT)	*North-to-East*	3.3%	4
(SB THRU)	*North-to-South*	96.7%	116
(SB RT)	*North-to-West*	0.0%	0
(NB LT)	*South-to-West*	0.0%	0
(NB THRU)	*South-to-North*	97.3%	214
(NB RT)	*South-to-East*	2.7%	6

Desired Closure: 1.00

Existing Year AADTs

Only the existing year total departure volumes [AADT*K*(1-D)] will be used to calculate the turning percentages first guess.

Existing Turning Movement Counts

The turning percentages first guess is the same as the ***actual distribution of turning volumes entered***. No balancing technique is used.

FSUTMS Model Year AADTs

Only the FSUTMS model year departure volumes [AADT*K*(1-D)] will be used to calculate the turning percentages first guess.

PROJECT TRAFFIC FOR Belle Terre Blvd AT Kathleen Tr (S)- PM

DESIGN HOUR TURNING MOVEMENTS IN YEAR 2015

Belle Terre Blvd
(4200)
155
0.0% 0 | 95.9% 149 | 4.1% 6

Kathleen Tr (S)- PM
3 42.6%
0 0.0% 8 (230)
5 57.4%

0.0% 0
0 0 0.0% 0
0.0% 0

Kathleen Tr (S)- PM

0 | 0.0% 206 | 97.0% 6 | 3.0%
212
(4000)
Belle Terre Blvd

(XXXXX)	2015 AADT
XXXX	2015 DDHV
K ML =	9.00%
K SS =	9.00%

D Factors
59.0% NB
41.0% SB
39.0% WB

DESIGN HOUR TURNING MOVEMENTS IN YEAR 2020

Belle Terre Blvd
(5300)
196
0.0% 0 | 96.5% 189 | 3.5% 7

Kathleen Tr (S)- PM
4 42.7%
0 0.0% 9 (260)
5 57.3%

0.0% 0
0 0 0.0% 0
0.0% 0

Kathleen Tr (S)- PM

0 | 0.0% 260 | 97.4% 7 | 2.6%
267
(5000)
Belle Terre Blvd

(XXXXX)	2020 AADT
XXXX	2020 DDHV
K ML =	9.00%
K SS =	9.00%

D Factors
59.0% NB
41.0% SB
39.0% WB

DESIGN HOUR TURNING MOVEMENTS IN YEAR 2025

Belle Terre Blvd
(6400)
236
0.0% 0 | 96.9% 229 | 3.1% 7

Kathleen Tr (S)- PM
4 42.8%
0 0.0% 10 (280)
6 57.2%

0.0% 0
0 0 0.0% 0
0.0% 0

Kathleen Tr (S)- PM

0 | 0.0% 315 | 97.7% 7 | 2.3%
322
(6100)
Belle Terre Blvd

(XXXXX)	2025 AADT
XXXX	2025 DDHV
K ML =	9.00%
K SS =	9.00%

D Factors
59.0% NB
41.0% SB
39.0% WB

DESIGN HOUR TURNING MOVEMENTS IN YEAR 2030

Belle Terre Blvd
(7500)
277
0.0% 0 | 97.2% 269 | 2.8% 8

Kathleen Tr (S)- PM
5 42.2%
0 0.0% 11 (300)
6 57.8%

0.0% 0
0 0 0.0% 0
0.0% 0

Kathleen Tr (S)- PM

0 | 0.0% 369 | 97.9% 8 | 2.1%
377
(7100)
Belle Terre Blvd

(XXXXX)	2030 AADT
XXXX	2030 DDHV
K ML =	9.00%
K SS =	9.00%

D Factors
59.0% NB
41.0% SB
39.0% WB

PROJECT TRAFFIC FOR Belle Terre Blvd AT Kathleen Tr (S)- PM

2015 INPUT TMCs COMPARED TO 2015 DHV

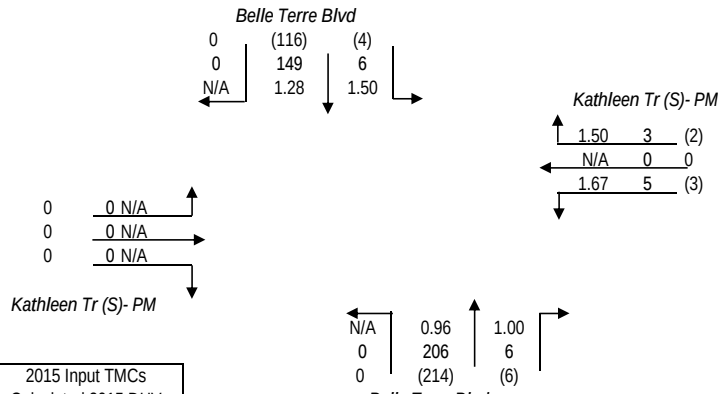

(XXX)	2015 Input TMCs
XXX	Calculated 2015 DHV
X.XX	Ratio

2015 INPUT TMCs COMPARED TO 2020 DHV

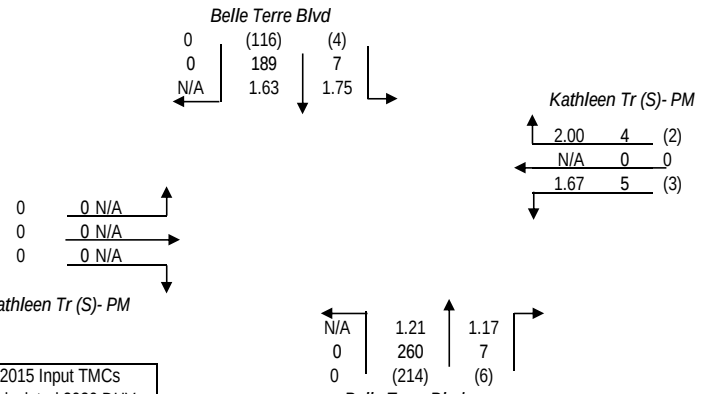

(XXX)	2015 Input TMCs
XXX	Calculated 2020 DHV
X.XX	Ratio

2015 INPUT TMCs COMPARED TO 2025 DHV

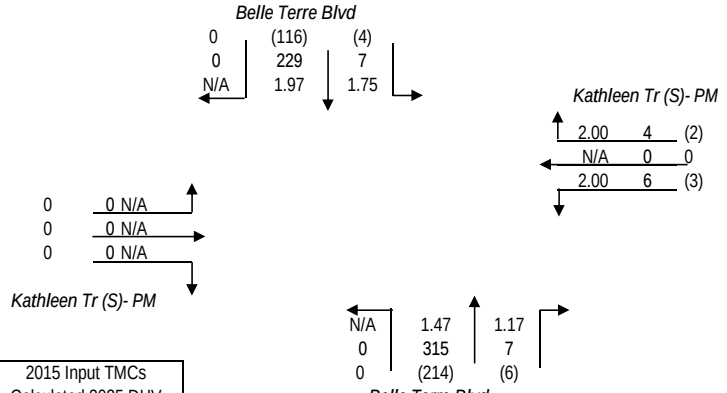

(XXX)	2015 Input TMCs
XXX	Calculated 2025 DHV
X.XX	Ratio

2015 INPUT TMCs COMPARED TO 2030 DHV

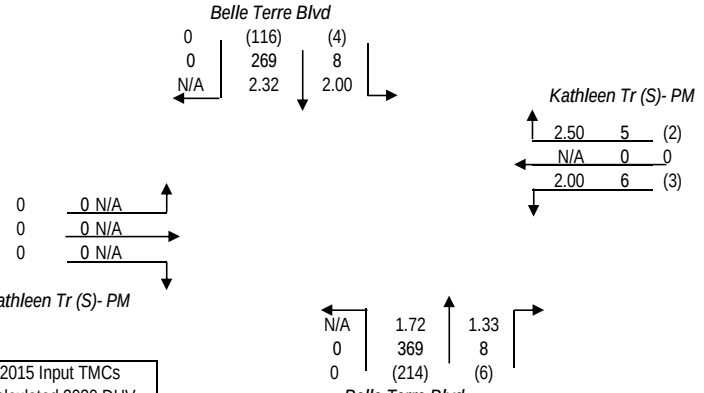

(XXX)	2015 Input TMCs
XXX	Calculated 2030 DHV
X.XX	Ratio

TURNS5 ANALYSIS SHEET - INPUT

Analyst:	-
Date:	13-Nov-15
Highway:	Belle Terre Blvd
Intersection:	Kainite Pl/Kathleen Tr (N)- PM
Project:	Belle Terre Blvd/Pkwy Intersection Analysis
County:	Flagler

Is this a 4 way intersection?

- (●) Yes, my intersection has four approaches

If not, which 3 approaches exist in the intersection?

- ( ) EB, WB, and SB
- ( ) EB, WB, and NB
- ( ) EB, SB, and NB
- ( ) WB, SB, and NB

Is the Mainline Oriented North/South? Enter Yes or No: (●) Yes ( ) No

K Factors	
Mainline	9.00%
Side street	9.00%

D Factors	*Mainline*
Northbound (NB)	59.0%
Southbound (SB)	41.0%
	Side street
Westbound (WB)	39.0%
Eastbound (EB)	61.0%

Do you have FTSUTMS Model Year traffic from which you would like to interpolate/extrapolate for project years? (Y/N)

Enter Yes or No: (●) Yes ( ) No

If "Yes" go to cell C47 — If "No" go to cell C31

Enter Year and Growth Rates from Base Year:

	Year	*Rate* (1.0% = 0.01) **Mainline**	**Side Street**
Base	2015	0.00%	0.00%
Opening	2025		
Mid	2035		
Design	2045		

Mainline Growth Function: (●) Linear ( ) Exponential ( ) Decaying

Side Street Growth Function: (●) Linear ( ) Exponential ( ) Decaying

Enter Base Year AADTs for Volume Comparison:
(growth rates are used to calculate other project years)

From West: EB Approach	*From East: WB Approach*	*From North: SB Approach*	*From South: NB Approach*	***TOTAL***
0	0	0	0	0

Enter Project and Model Years

	Year
Base	2015
Opening	2020
Mid	2025
Design	2030
Model	2030

Enter Base and Model Year AADTs for Volume Comparison:
(volumes for other project years are calculated by interpolation)

	From West: EB Approach	*From East: WB Approach*	*From North: SB Approach*	*From South: NB Approach*	***TOTAL***
2015	177	288	4500	4200	9165
2030	230	370	8000	7500	16100

		1st Guess Turning %'s for AADT Balancing	**Actual/Counted Traffic for 2015**
(EB LT)	*West-to-North*	42.9%	3
(EB THRU)	*West-to-East*	0.0%	0
(EB RT)	*West-to-South*	57.1%	4
(WB LT)	*East-to-South*	50.0%	2
(WB THRU)	*East-to-West*	0.0%	0
(WB RT)	*East-to-North*	50.0%	2
(SB LT)	*North-to-East*	7.0%	9
(SB THRU)	*North-to-South*	88.3%	114
(SB RT)	*North-to-West*	4.7%	6
(NB LT)	*South-to-West*	1.4%	3
(NB THRU)	*South-to-North*	96.3%	208
(NB RT)	*South-to-East*	2.3%	5

Desired Closure: 3.00

First Guess Turning % Option Used
Existing Turning Movement Counts

Existing Year AADTs — Only the existing year total departure volumes [AADT*K*(1-D)] will be used to calculate the turning percentages first guess.

Existing Turning Movement Counts — The turning percentages first guess is the same as the ***actual distribution of turning volumes entered***. No balancing technique is used.

FSUTMS Model Year AADTs — Only the FSUTMS model year departure volumes [AADT*K*(1-D)] will be used to calculate the turning percentages first guess.

PROJECT TRAFFIC FOR Belle Terre Blvd AT Kainite Pl/Kathleen Tr (N)- PM

DESIGN HOUR TURNING MOVEMENTS IN YEAR 2015

Belle Terre Blvd
(4500)
166
2.7% 4 | 90.4% 151 | 6.9% 11

Kainite Pl/Kathleen Tr (N)- PM
5 52.0%
0 0.0% 10 (290)
5 48.0%

(180) 10
44.8% 4
0.0% 0
55.2% 6

Kainite Pl/Kathleen Tr (N)- PM

2 0.7% | 216 97.2% | 5 2.1%
223
(4200)
Belle Terre Blvd

(XXXXX)	2015 AADT
XXXX	2015 DDHV
K ML =	9.00%
K SS =	9.00%

D Factors
59.0% NB
41.0% SB
39.0% WB
61.0% EB

DESIGN HOUR TURNING MOVEMENTS IN YEAR 2020

Belle Terre Blvd
(5700)
209
2.5% 5 | 91.6% 192 | 5.9% 12

Kainite Pl/Kathleen Tr (N)- PM
6 51.8%
0 0.0% 11 (320)
5 48.2%

(200) 11
44.7% 5
0.0% 0
55.3% 6

Kainite Pl/Kathleen Tr (N)- PM

2 0.7% | 274 97.6% | 5 1.7%
281
(5300)
Belle Terre Blvd

(XXXXX)	2020 AADT
XXXX	2020 DDHV
K ML =	9.00%
K SS =	9.00%

D Factors
59.0% NB
41.0% SB
39.0% WB
61.0% EB

DESIGN HOUR TURNING MOVEMENTS IN YEAR 2025

Belle Terre Blvd
(6800)
252
2.1% 5 | 92.4% 233 | 5.5% 14

Kainite Pl/Kathleen Tr (N)- PM
6 51.7%
0 0.0% 12 (340)
6 48.3%

(210) 12
44.6% 5
0.0% 0
55.4% 7

Kainite Pl/Kathleen Tr (N)- PM

2 0.6% | 333 97.8% | 5 1.6%
340
(6400)
Belle Terre Blvd

(XXXXX)	2025 AADT
XXXX	2025 DDHV
K ML =	9.00%
K SS =	9.00%

D Factors
59.0% NB
41.0% SB
39.0% WB
61.0% EB

DESIGN HOUR TURNING MOVEMENTS IN YEAR 2030

Belle Terre Blvd
(8000)
295
2.0% 6 | 93.1% 275 | 4.9% 14

Kainite Pl/Kathleen Tr (N)- PM
7 51.0%
0 0.0% 13 (370)
6 49.0%

(230) 13
43.9% 6
0.0% 0
56.1% 7

Kainite Pl/Kathleen Tr (N)- PM

2 0.6% | 390 97.9% | 6 1.5%
398
(7500)
Belle Terre Blvd

(XXXXX)	2030 AADT
XXXX	2030 DDHV
K ML =	9.00%
K SS =	9.00%

D Factors
59.0% NB
41.0% SB
39.0% WB
61.0% EB

PROJECT TRAFFIC FOR Belle Terre Blvd AT Kainite Pl/Kathleen Tr (N)- PM

2015 INPUT TMCs COMPARED TO 2015 DHV

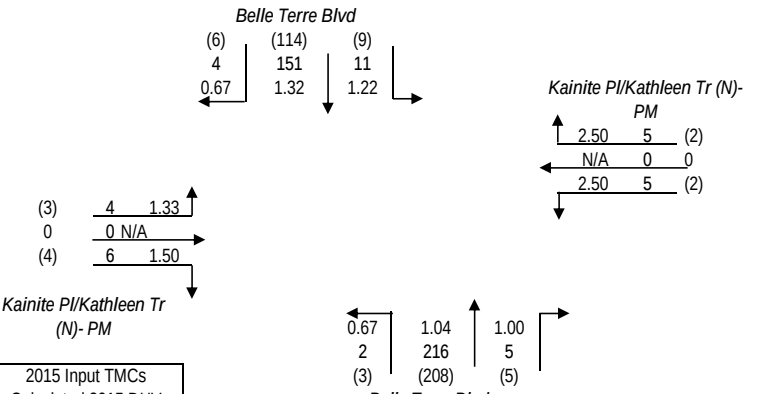

(XXX)	2015 Input TMCs
XXX	Calculated 2015 DHV
X.XX	Ratio

2015 INPUT TMCs COMPARED TO 2020 DHV

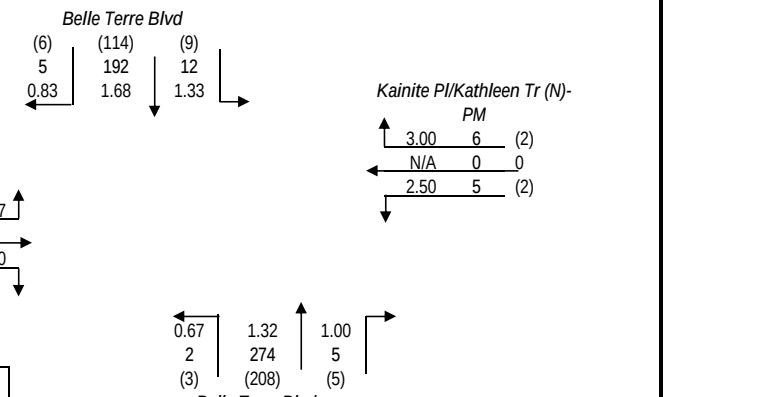

(XXX)	2015 Input TMCs
XXX	Calculated 2020 DHV
X.XX	Ratio

2015 INPUT TMCs COMPARED TO 2025 DHV

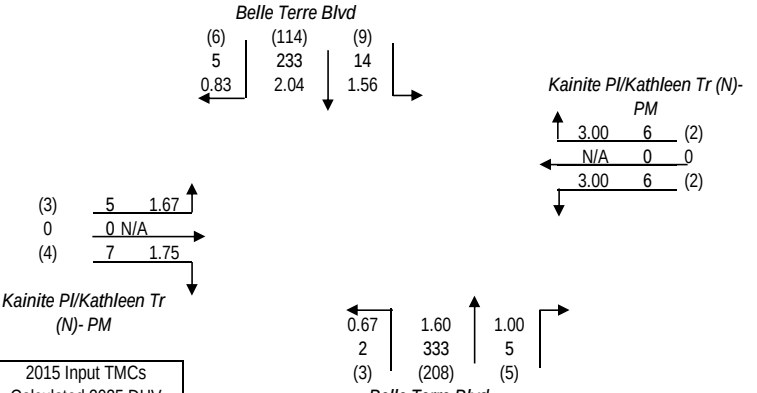

(XXX)	2015 Input TMCs
XXX	Calculated 2025 DHV
X.XX	Ratio

2015 INPUT TMCs COMPARED TO 2030 DHV

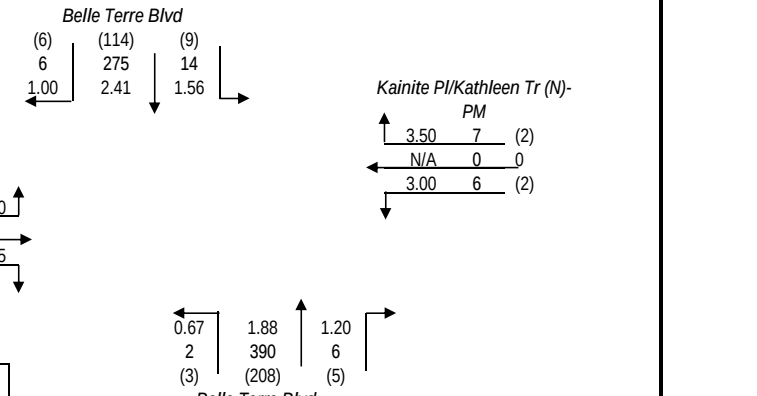

(XXX)	2015 Input TMCs
XXX	Calculated 2030 DHV
X.XX	Ratio

TURNS5 ANALYSIS SHEET - INPUT

Analyst:	-
Date:	13-Nov-15
Highway:	Belle Terre Blvd
Intersection:	Karas Tr- PM
Project:	Belle Terre Blvd/Pkwy Intersection Analysis
County:	Flagler

Is this a 4 way intersection?

- ○ Yes, my intersection has four approaches

If not, which 3 approaches exist in the intersection?

- ○ EB, WB, and SB
- ○ EB, WB, and NB
- ○ EB, SB, and NB
- ◉ WB, SB, and NB

Is the Mainline Oriented North/South? (Enter Yes or No)

- ◉ Yes
- ○ No

K Factors	Mainline	**D Factors**	*Mainline*
	9.00%	Northbound (NB)	59.0%
	Side street	Southbound (SB)	41.0%
	9.00%		*Side street*
		Westbound (WB)	39.0%
		Eastbound (EB)	0.0%

Do you have FTSUTMS Model Year traffic from which you would like to interpolate/extrapolate for project years? (Y/N) (Enter Yes or No)

- ◉ Yes
- ○ No

If "Yes" go to cell C47 If "No" go to cell C31

Enter Year and Growth Rates from Base Year:

	Year	*Rate* (1.0% = 0.01) Mainline	Side Street
Base	2015	0.00%	0.00%
Opening	2025		
Mid	2035		
Design	2045		

Mainline Growth Function

- ◉ Linear
- ○ Exponential
- ○ Decaying

Side Street Growth Function

- ◉ Linear
- ○ Exponential
- ○ Decaying

Enter Base Year AADTs for Volume Comparison:
(growth rates are used to calculate other project years)

From West: EB Approach	*From East: WB Approach*	*From North: SB Approach*	*From South: NB Approach*	***TOTAL***
0	0	0	0	0

Enter Project and Model Years

	Year
Base	2015
Opening	2020
Mid	2025
Design	2030
Model	2030

Enter Base and Model Year AADTs for Volume Comparison:
(volumes for other project years are calculated by interpolation)

	From West: EB Approach	*From East: WB Approach*	*From North: SB Approach*	*From South: NB Approach*	***TOTAL***
2015	0	633	5000	4500	10133
2030	0	810	8500	8000	17310

		1st Guess Turning %'s for AADT Balancing	**Actual/Counted Traffic for 2015**
(EB LT)	*West-to-North*	0.0%	0
(EB THRU)	*West-to-East*	0.0%	0
(EB RT)	*West-to-South*	0.0%	0
(WB LT)	*East-to-South*	20.7%	6
(WB THRU)	*East-to-West*	0.0%	0
(WB RT)	*East-to-North*	79.3%	23
(SB LT)	*North-to-East*	14.6%	21
(SB THRU)	*North-to-South*	85.4%	123
(SB RT)	*North-to-West*	0.0%	0
(NB LT)	*South-to-West*	0.0%	0
(NB THRU)	*South-to-North*	96.7%	206
(NB RT)	*South-to-East*	3.3%	7

Desired Closure: 1.00

Existing Year AADTs

Existing Turning Movement Counts

FSUTMS Model Year AADTs

First Guess Turning % Option Used
Existing Turning Movement Counts

Only the existing year total departure volumes [AADT*K*(1-D)] will be used to calculate the turning percentages first guess.

The turning percentages first guess is the same as the ***actual distribution of turning volumes entered***. No balancing technique is used.

Only the FSUTMS model year departure volumes [AADT*K*(1-D)] will be used to calculate the turning percentages first guess.

PROJECT TRAFFIC FOR Belle Terre Blvd AT Karas Tr- PM

DESIGN HOUR TURNING MOVEMENTS IN YEAR 2015

Belle Terre Blvd
(5000)
185
0.0% 0 | 85.6% 158 | 14.4% 27

Karas Tr- PM
18 80.1%
0 0.0% 22 (630)
4 19.9%

0.0% 0
0 0 0.0% 0
0.0% 0

Karas Tr- PM

0 | 232 | 7
0.0% | 96.9% | 3.1%
239
(4500)
Belle Terre Blvd

(XXXXX)	2015 AADT
XXXX	2015 DDHV
K ML =	9.00%
K SS =	9.00%

D Factors
59.0% NB
41.0% SB
39.0% WB

DESIGN HOUR TURNING MOVEMENTS IN YEAR 2020

Belle Terre Blvd
(6200)
228
0.0% 0 | 87.4% 199 | 12.6% 29

Karas Tr- PM
19 79.5%
0 0.0% 24 (690)
5 20.5%

0.0% 0
0 0 0.0% 0
0.0% 0

Karas Tr- PM

0 | 293 | 8
0.0% | 97.2% | 2.8%
301
(5700)
Belle Terre Blvd

(XXXXX)	2020 AADT
XXXX	2020 DDHV
K ML =	9.00%
K SS =	9.00%

D Factors
59.0% NB
41.0% SB
39.0% WB

DESIGN HOUR TURNING MOVEMENTS IN YEAR 2025

Belle Terre Blvd
(7300)
271
0.0% 0 | 88.7% 240 | 11.3% 31

Karas Tr- PM
21 79.0%
0 0.0% 26 (750)
5 21.0%

0.0% 0
0 0 0.0% 0
0.0% 0

Karas Tr- PM

0 | 354 | 9
0.0% | 97.5% | 2.5%
363
(6800)
Belle Terre Blvd

(XXXXX)	2025 AADT
XXXX	2025 DDHV
K ML =	9.00%
K SS =	9.00%

D Factors
59.0% NB
41.0% SB
39.0% WB

DESIGN HOUR TURNING MOVEMENTS IN YEAR 2030

Belle Terre Blvd
(8500)
314
0.0% 0 | 89.6% 281 | 10.4% 33

Karas Tr- PM
22 78.1%
0 0.0% 28 (810)
6 21.9%

0.0% 0
0 0 0.0% 0
0.0% 0

Karas Tr- PM

0 | 415 | 10
0.0% | 97.6% | 2.4%
425
(8000)
Belle Terre Blvd

(XXXXX)	2030 AADT
XXXX	2030 DDHV
K ML =	9.00%
K SS =	9.00%

D Factors
59.0% NB
41.0% SB
39.0% WB

PROJECT TRAFFIC FOR Belle Terre Blvd AT Karas Tr- PM

2015 INPUT TMCs COMPARED TO 2015 DHV

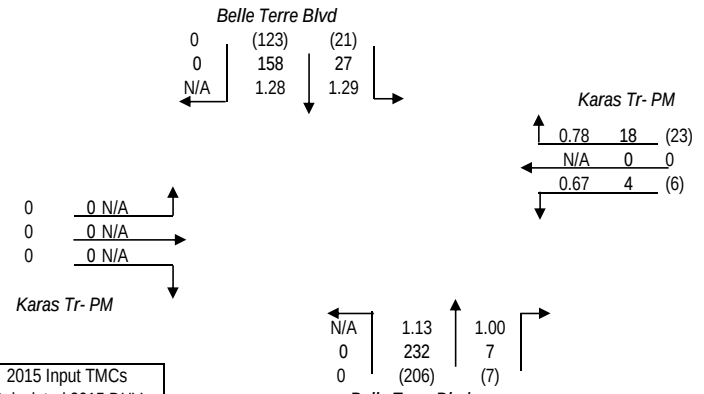

(XXX)	2015 Input TMCs
XXX	Calculated 2015 DHV
X.XX	Ratio

2015 INPUT TMCs COMPARED TO 2020 DHV

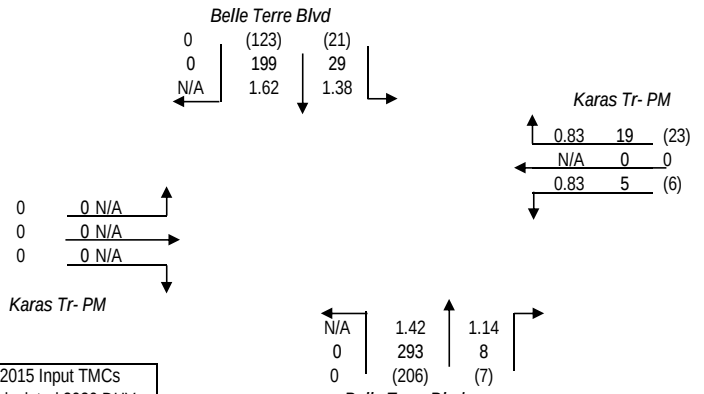

(XXX)	2015 Input TMCs
XXX	Calculated 2020 DHV
X.XX	Ratio

2015 INPUT TMCs COMPARED TO 2025 DHV

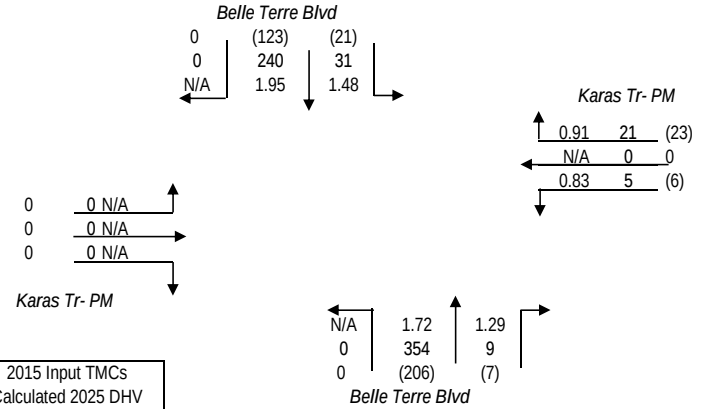

(XXX)	2015 Input TMCs
XXX	Calculated 2025 DHV
X.XX	Ratio

2015 INPUT TMCs COMPARED TO 2030 DHV

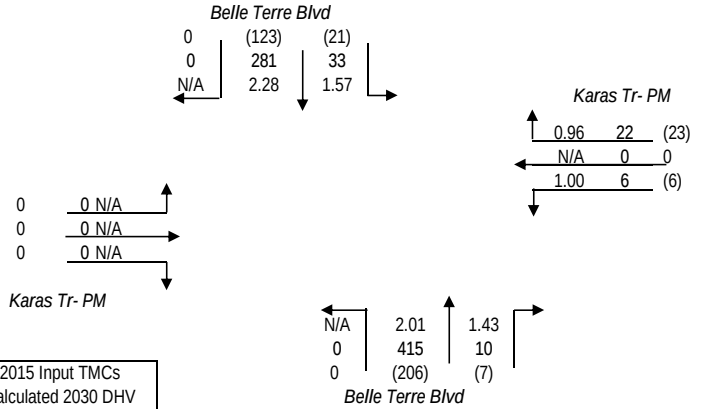

(XXX)	2015 Input TMCs
XXX	Calculated 2030 DHV
X.XX	Ratio

TURNS5 ANALYSIS SHEET - INPUT

Analyst:	-
Date:	13-Nov-15
Highway:	Belle Terre Blvd
Intersection:	Citation Blvd- PM
Project:	Belle Terre Blvd/Pkwy Intersection Analysis
County:	Flagler

Is this a 4 way intersection?

- ○ Yes, my intersection has four approaches

If not, which 3 approaches exist in the intersection?

- ○ EB, WB, and SB
- ○ EB, WB, and NB
- ○ EB, SB, and NB
- ◉ WB, SB, and NB

Is the Mainline Oriented North/South? (Enter Yes or No)

- ◉ Yes
- ○ No

K Factors	
Mainline	9.00%
Side street	9.00%

D Factors	*Mainline*
Northbound (NB)	59.0%
Southbound (SB)	41.0%
	Side street
Westbound (WB)	39.0%
Eastbound (EB)	0.0%

Do you have FTSUTMS Model Year traffic from which you would like to interpolate/extrapolate for project years? (Y/N) (Enter Yes or No)

- ◉ Yes
- ○ No

If "Yes" go to cell C47 If "No" go to cell C31

Enter Year and Growth Rates from Base Year:

	Year	*Rate* (1.0% = 0.01) Mainline	Side Street
Base	2015	0.00%	0.00%
Opening	2025		
Mid	2035		
Design	2045		

Mainline Growth Function

- ◉ Linear
- ○ Exponential
- ○ Decaying

Side Street Growth Function

- ◉ Linear
- ○ Exponential
- ○ Decaying

Enter Base Year AADTs for Volume Comparison:
(growth rates are used to calculate other project years)

From West: EB Approach	*From East: WB Approach*	*From North: SB Approach*	*From South: NB Approach*	***TOTAL***
0	0	0	0	0

Enter Project and Model Years

	Year
Base	2015
Opening	2020
Mid	2025
Design	2030
Model	2030

Enter Base and Model Year AADTs for Volume Comparison:
(volumes for other project years are calculated by interpolation)

	From West: EB Approach	*From East: WB Approach*	*From North: SB Approach*	*From South: NB Approach*	***TOTAL***
2015	0	400	5500	5000	10900
2030	0	510	9500	8500	18510

		1st Guess Turning %'s for AADT Balancing	**Actual/Counted Traffic for 2015**
(EB LT)	*West-to-North*	0.0%	0
(EB THRU)	*West-to-East*	0.0%	0
(EB RT)	*West-to-South*	0.0%	0
(WB LT)	*East-to-South*	57.9%	11
(WB THRU)	*East-to-West*	0.0%	0
(WB RT)	*East-to-North*	42.1%	8
(SB LT)	*North-to-East*	5.8%	8
(SB THRU)	*North-to-South*	94.2%	131
(SB RT)	*North-to-West*	0.0%	0
(NB LT)	*South-to-West*	0.0%	0
(NB THRU)	*South-to-North*	90.8%	217
(NB RT)	*South-to-East*	9.2%	22

Desired Closure: 3.00

Existing Year AADTs

Existing Turning Movement Counts

FSUTMS Model Year AADTs

First Guess Turning % Option Used
Existing Turning Movement Counts

Only the existing year total departure volumes [AADT*K*(1-D)] will be used to calculate the turning percentages first guess.

The turning percentages first guess is the same as the ***actual distribution of turning volumes entered***. No balancing technique is used.

Only the FSUTMS model year departure volumes [AADT*K*(1-D)] will be used to calculate the turning percentages first guess.

PROJECT TRAFFIC FOR Belle Terre Blvd AT Citation Blvd- PM

DESIGN HOUR TURNING MOVEMENTS IN YEAR 2015

Belle Terre Blvd
(5500)
203
0.0% 0 | 96.1% 195 | 3.9% 8

Citation Blvd- PM
7 48.0%
0 0.0% 14 (400)
7 52.0%

0.0% 0
0 0 0.0% 0
0.0% 0

Citation Blvd- PM

0 | 0.0% 253 | 13 4.9%
266
(5000)
Belle Terre Blvd

(XXXXX)	2015 AADT
XXXX	2015 DDHV
K ML =	9.00%
K SS =	9.00%

D Factors
59.0% NB
41.0% SB
39.0% WB

DESIGN HOUR TURNING MOVEMENTS IN YEAR 2020

Belle Terre Blvd
(6800)
252
0.0% 0 | 96.5% 243 | 3.5% 9

Citation Blvd- PM
7 48.5%
0 0.0% 15 (440)
8 51.5%

0.0% 0
0 0 0.0% 0
0.0% 0

Citation Blvd- PM

0 | 0.0% 313 | 14 4.3%
327
(6200)
Belle Terre Blvd

(XXXXX)	2020 AADT
XXXX	2020 DDHV
K ML =	9.00%
K SS =	9.00%

D Factors
59.0% NB
41.0% SB
39.0% WB

DESIGN HOUR TURNING MOVEMENTS IN YEAR 2025

Belle Terre Blvd
(8200)
301
0.0% 0 | 96.8% 291 | 3.2% 10

Citation Blvd- PM
8 48.7%
0 0.0% 17 (470)
9 51.3%

0.0% 0
0 0 0.0% 0
0.0% 0

Citation Blvd- PM

0 | 0.0% 374 | 15 3.9%
389
(7300)
Belle Terre Blvd

(XXXXX)	2025 AADT
XXXX	2025 DDHV
K ML =	9.00%
K SS =	9.00%

D Factors
59.0% NB
41.0% SB
39.0% WB

DESIGN HOUR TURNING MOVEMENTS IN YEAR 2030

Belle Terre Blvd
(9500)
351
0.0% 0 | 97.1% 341 | 2.9% 10

Citation Blvd- PM
9 47.7%
0 0.0% 18 (510)
9 52.3%

0.0% 0
0 0 0.0% 0
0.0% 0

Citation Blvd- PM

0 | 0.0% 434 | 17 3.7%
451
(8500)
Belle Terre Blvd

(XXXXX)	2030 AADT
XXXX	2030 DDHV
K ML =	9.00%
K SS =	9.00%

D Factors
59.0% NB
41.0% SB
39.0% WB

PROJECT TRAFFIC FOR Belle Terre Blvd AT Citation Blvd- PM

2015 INPUT TMCs COMPARED TO 2015 DHV

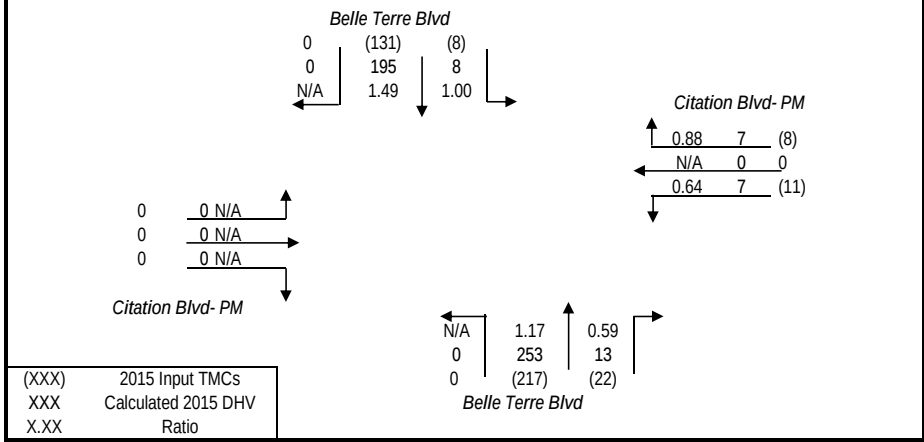

2015 INPUT TMCs COMPARED TO 2020 DHV

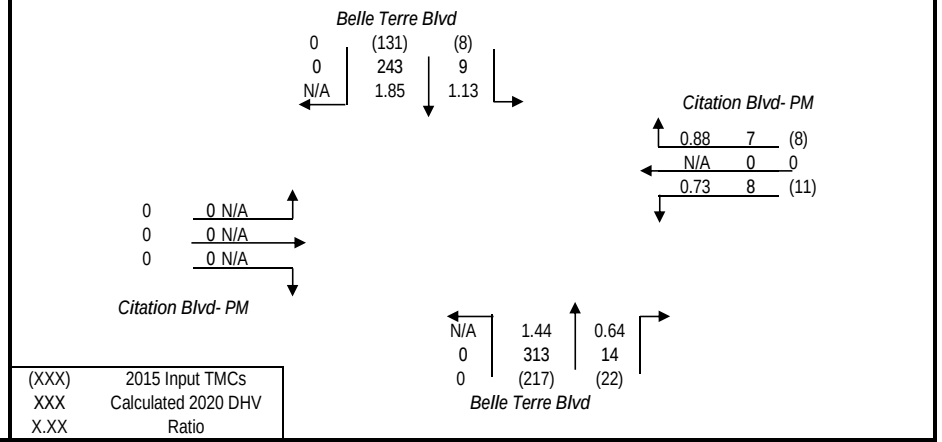

2015 INPUT TMCs COMPARED TO 2025 DHV

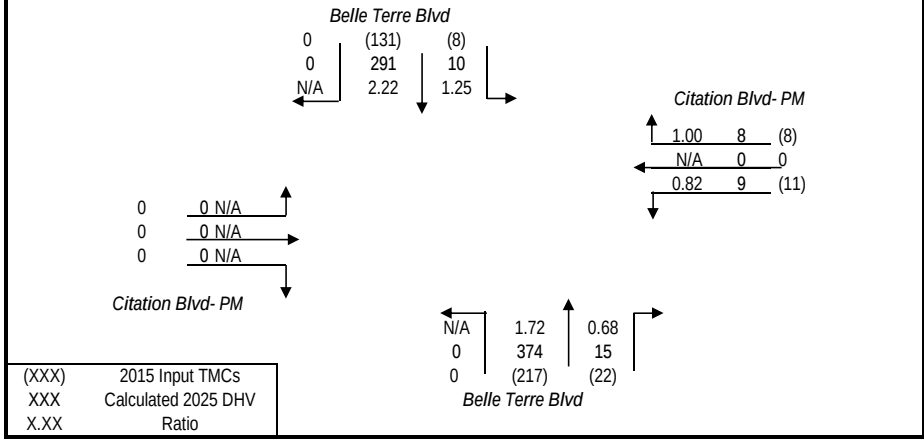

2015 INPUT TMCs COMPARED TO 2030 DHV

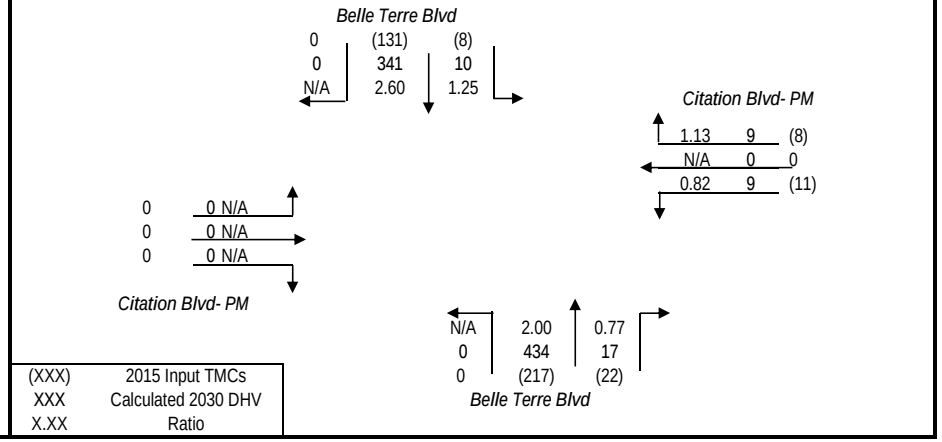

TURNS5 ANALYSIS SHEET - INPUT

Analyst:	-
Date:	13-Nov-15
Highway:	Belle Terre Blvd
Intersection:	Zonal Geranium Tr (S) - PM
Project:	Belle Terre Blvd/Pkwy Intersection Analysis
County:	Flagler

Is this a 4 way intersection?

- ○ Yes, my intersection has four approaches

If not, which 3 approaches exist in the intersection?

- ○ EB, WB, and SB
- ○ EB, WB, and NB
- ◉ EB, SB, and NB
- ○ WB, SB, and NB

Is the Mainline Oriented North/South? (Enter Yes or No)

- ◉ Yes
- ○ No

K Factors	
Mainline	9.00%
Side street	9.00%

D Factors	*Mainline*
Northbound (NB)	41.0%
Southbound (SB)	59.0%
	Side street
Westbound (WB)	0.0%
Eastbound (EB)	39.0%

Do you have FTSUTMS Model Year traffic from which you would like to interpolate/extrapolate for project years? (Y/N) (Enter Yes or No)

- ◉ Yes
- ○ No

If "Yes" go to cell C47 If "No" go to cell C31

Enter Year and Growth Rates from Base Year:

	Year	*Rate* (1.0% = 0.01) Mainline	Side Street
Base	2015	0.00%	0.00%
Opening	2025		
Mid	2035		
Design	2045		

Mainline Growth Function

- ◉ Linear
- ○ Exponential
- ○ Decaying

Side Street Growth Function

- ◉ Linear
- ○ Exponential
- ○ Decaying

Enter Base Year AADTs for Volume Comparison:
(growth rates are used to calculate other project years)

From West: EB Approach	*From East: WB Approach*	*From North: SB Approach*	*From South: NB Approach*	***TOTAL***
0	0	0	0	0

Enter Project and Model Years

	Year
Base	2015
Opening	2020
Mid	2025
Design	2030
Model	2030

Enter Base and Model Year AADTs for Volume Comparison:
(volumes for other project years are calculated by interpolation)

	From West: EB Approach	*From East: WB Approach*	*From North: SB Approach*	*From South: NB Approach*	***TOTAL***
2015	778	0	5500	5500	11778
2030	1000	0	9500	9500	20000

First Guess Turning % Option Used
Existing Turning Movement Counts

		1st Guess Turning %'s for AADT Balancing	**Actual/Counted Traffic for 2015**
(EB LT)	*West-to-North*	65.2%	15
(EB THRU)	*West-to-East*	0.0%	0
(EB RT)	*West-to-South*	34.8%	8
(WB LT)	*East-to-South*	0.0%	0
(WB THRU)	*East-to-West*	0.0%	0
(WB RT)	*East-to-North*	0.0%	0
(SB LT)	*North-to-East*	0.0%	0
(SB THRU)	*North-to-South*	84.0%	131
(SB RT)	*North-to-West*	16.0%	25
(NB LT)	*South-to-West*	9.8%	22
(NB THRU)	*South-to-North*	90.2%	203
(NB RT)	*South-to-East*	0.0%	0

Desired Closure: 1.00

Existing Year AADTs

Only the existing year total departure volumes [AADT*K*(1-D)] will be used to calculate the turning percentages first guess.

Existing Turning Movement Counts

The turning percentages first guess is the same as the ***actual distribution of turning volumes entered***. No balancing technique is used.

FSUTMS Model Year AADTs

Only the FSUTMS model year departure volumes [AADT*K*(1-D)] will be used to calculate the turning percentages first guess.

PROJECT TRAFFIC FOR Belle Terre Blvd AT Zonal Geranium Tr (S) - PM

DESIGN HOUR TURNING MOVEMENTS IN YEAR 2015

Belle Terre Blvd
(5500)
292
9.7% 28 | 90.3% 264 | 0.0% 0

Zonal Geranium Tr (S) - PM
0 0.0%
0 0.0% 0 0
0 0.0%

(780) 27
62.3% 17
0.0% 0
37.7% 10

Zonal Geranium Tr (S) - PM

13 | 190 | 0
6.5% | 93.5% | 0.0%
203
(5500)
Belle Terre Blvd

(XXXXX)	2015 AADT
XXXX	2015 DDHV
K ML =	9.00%
K SS =	9.00%

D Factors
41.0% NB
59.0% SB
39.0% EB

DESIGN HOUR TURNING MOVEMENTS IN YEAR 2020

Belle Terre Blvd
(6800)
363
8.6% 31 | 91.4% 332 | 0.0% 0

Zonal Geranium Tr (S) - PM
0 0.0%
0 0.0% 0 0
0 0.0%

(850) 30
62.5% 19
0.0% 0
37.5% 11

Zonal Geranium Tr (S) - PM

14 | 238 | 0
5.7% | 94.3% | 0.0%
252
(6800)
Belle Terre Blvd

(XXXXX)	2020 AADT
XXXX	2020 DDHV
K ML =	9.00%
K SS =	9.00%

D Factors
41.0% NB
59.0% SB
39.0% EB

DESIGN HOUR TURNING MOVEMENTS IN YEAR 2025

Belle Terre Blvd
(8200)
434
7.8% 34 | 92.2% 400 | 0.0% 0

Zonal Geranium Tr (S) - PM
0 0.0%
0 0.0% 0 0
0 0.0%

(930) 33
62.5% 21
0.0% 0
37.5% 12

Zonal Geranium Tr (S) - PM

16 | 285 | 0
5.2% | 94.8% | 0.0%
301
(8200)
Belle Terre Blvd

(XXXXX)	2025 AADT
XXXX	2025 DDHV
K ML =	9.00%
K SS =	9.00%

D Factors
41.0% NB
59.0% SB
39.0% EB

DESIGN HOUR TURNING MOVEMENTS IN YEAR 2030

Belle Terre Blvd
(9500)
504
4.4% 22 | 95.6% 482 | 0.0% 0

Zonal Geranium Tr (S) - PM
0 0.0%
0 0.0% 0 0
0 0.0%

(1000) 35
33.7% 12
0.0% 0
66.3% 23

Zonal Geranium Tr (S) - PM

31 | 320 | 0
8.8% | 91.2% | 0.0%
351
(9500)
Belle Terre Blvd

(XXXXX)	2030 AADT
XXXX	2030 DDHV
K ML =	9.00%
K SS =	9.00%

D Factors
41.0% NB
59.0% SB
39.0% EB

PROJECT TRAFFIC FOR Belle Terre Blvd AT Zonal Geranium Tr (S) - PM

2015 INPUT TMCs COMPARED TO 2015 DHV

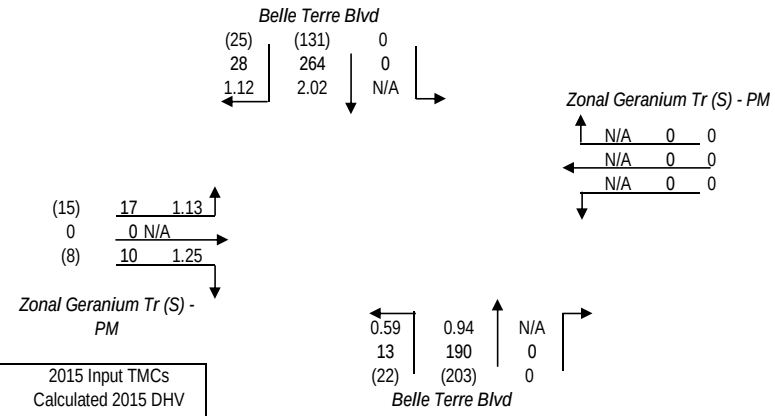

(XXX)	2015 Input TMCs
XXX	Calculated 2015 DHV
X.XX	Ratio

2015 INPUT TMCs COMPARED TO 2020 DHV

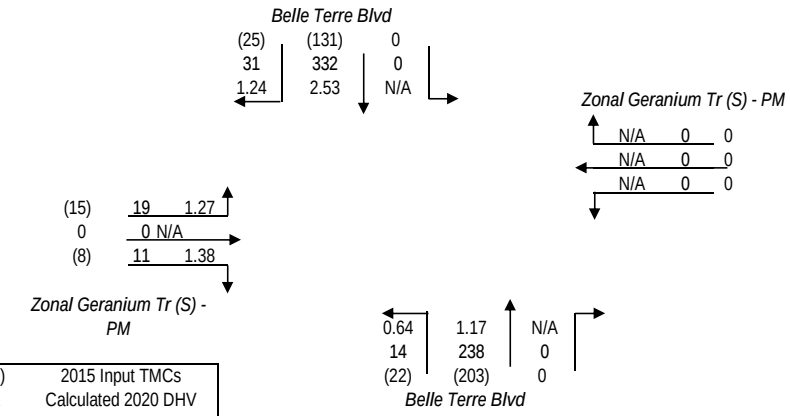

(XXX)	2015 Input TMCs
XXX	Calculated 2020 DHV
X.XX	Ratio

2015 INPUT TMCs COMPARED TO 2025 DHV

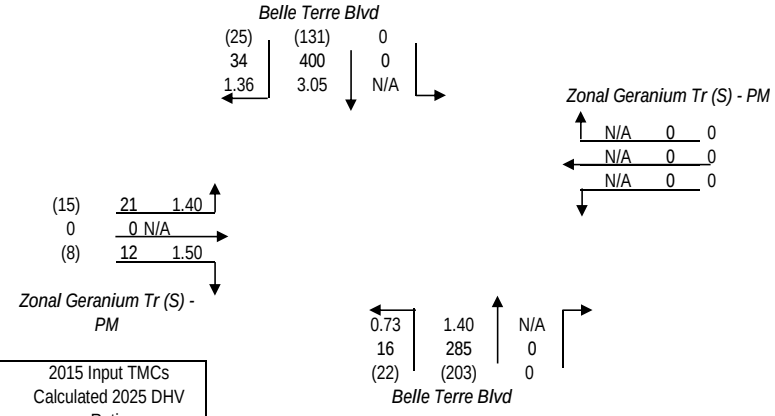

(XXX)	2015 Input TMCs
XXX	Calculated 2025 DHV
X.XX	Ratio

2015 INPUT TMCs COMPARED TO 2030 DHV

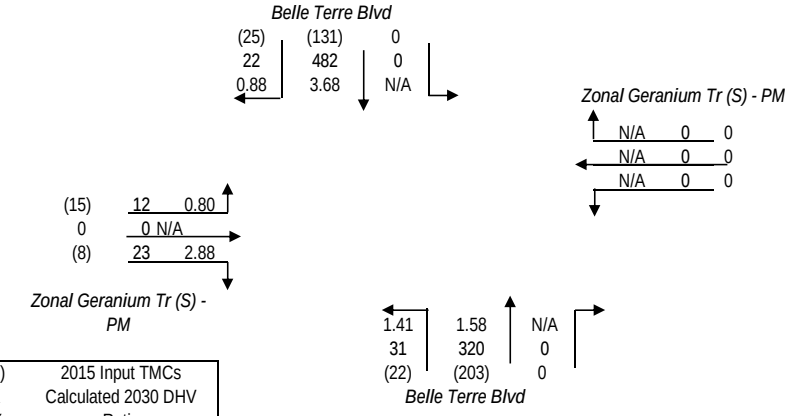

(XXX)	2015 Input TMCs
XXX	Calculated 2030 DHV
X.XX	Ratio

TURNS5 ANALYSIS SHEET - INPUT

Analyst:	-
Date:	13-Nov-15
Highway:	Belle Terre Blvd
Intersection:	Zonal Geranium Tr (N) - PM
Project:	Belle Terre Blvd/Pkwy Intersection Analysis
County:	Flagler

Is this a 4 way intersection?

- ○ Yes, my intersection has four approaches

If not, which 3 approaches exist in the intersection?

- ○ EB, WB, and SB
- ○ EB, WB, and NB
- ◉ EB, SB, and NB
- ○ WB, SB, and NB

Is the Mainline Oriented North/South? (Enter Yes or No)

- ◉ Yes
- ○ No

K Factors	
Mainline	9.00%
Side street	9.00%

D Factors	*Mainline*
Northbound (NB)	41.0%
Southbound (SB)	59.0%
	Side street
Westbound (WB)	0.0%
Eastbound (EB)	39.0%

Do you have FTSUTMS Model Year traffic from which you would like to interpolate/extrapolate for project years? (Y/N) (Enter Yes or No)

- ◉ Yes
- ○ No

If "Yes" go to cell C47 If "No" go to cell C31

Enter Year and Growth Rates from Base Year:

	Year	*Rate* (1.0% = 0.01) Mainline	Side Street
Base	2015	0.00%	0.00%
Opening	2025		
Mid	2035		
Design	2045		

Mainline Growth Function

- ◉ Linear
- ○ Exponential
- ○ Decaying

Side Street Growth Function

- ◉ Linear
- ○ Exponential
- ○ Decaying

Enter Base Year AADTs for Volume Comparison:
(growth rates are used to calculate other project years)

From West: EB Approach	*From East: WB Approach*	*From North: SB Approach*	*From South: NB Approach*	***TOTAL***
0	0	0	0	0

Enter Project and Model Years

	Year
Base	2015
Opening	2020
Mid	2025
Design	2030
Model	2030

Enter Base and Model Year AADTs for Volume Comparison:
(volumes for other project years are calculated by interpolation)

	From West: EB Approach	*From East: WB Approach*	*From North: SB Approach*	*From South: NB Approach*	***TOTAL***
2015	544	0	5500	5500	11544
2030	700	0	9500	9500	19700

		1st Guess Turning %'s for AADT Balancing	**Actual/Counted Traffic for 2015**
(EB LT)	*West-to-North*	80.0%	16
(EB THRU)	*West-to-East*	0.0%	0
(EB RT)	*West-to-South*	20.0%	4
(WB LT)	*East-to-South*	0.0%	0
(WB THRU)	*East-to-West*	0.0%	0
(WB RT)	*East-to-North*	0.0%	0
(SB LT)	*North-to-East*	0.0%	0
(SB THRU)	*North-to-South*	86.9%	152
(SB RT)	*North-to-West*	13.1%	23
(NB LT)	*South-to-West*	2.8%	6
(NB THRU)	*South-to-North*	97.2%	212
(NB RT)	*South-to-East*	0.0%	0

Desired Closure: 2.00

Existing Year AADTs

Existing Turning Movement Counts

FSUTMS Model Year AADTs

First Guess Turning % Option Used
Existing Turning Movement Counts

Only the existing year total departure volumes [AADT*K*(1-D)] will be used to calculate the turning percentages first guess.

The turning percentages first guess is the same as the ***actual distribution of turning volumes entered***. No balancing technique is used.

Only the FSUTMS model year departure volumes [AADT*K*(1-D)] will be used to calculate the turning percentages first guess.

PROJECT TRAFFIC FOR Belle Terre Blvd AT Zonal Geranium Tr (N) - PM

DESIGN HOUR TURNING MOVEMENTS IN YEAR 2015

Belle Terre Blvd
(5500)
292

8.3% 24 | 91.7% 268 | 0.0% 0

Zonal Geranium Tr (N) - PM
0 0.0%
0 0.0% 0 0
0 0.0%

(540) 19
77.1% 15
0.0% 0
22.9% 4

Zonal Geranium Tr (N) - PM

4 | 199 | 0
2.0% | 98.0% | 0.0%
203
(5500)
Belle Terre Blvd

(XXXXX)	2015 AADT
XXXX	2015 DDHV
K ML =	9.00%
K SS =	9.00%

D Factors
41.0% NB
59.0% SB
39.0% EB

DESIGN HOUR TURNING MOVEMENTS IN YEAR 2020

Belle Terre Blvd
(6800)
363

7.4% 27 | 92.6% 336 | 0.0% 0

Zonal Geranium Tr (N) - PM
0 0.0%
0 0.0% 0 0
0 0.0%

(600) 21
77.2% 16
0.0% 0
22.8% 5

Zonal Geranium Tr (N) - PM

5 | 247 | 0
1.8% | 98.2% | 0.0%
252
(6800)
Belle Terre Blvd

(XXXXX)	2020 AADT
XXXX	2020 DDHV
K ML =	9.00%
K SS =	9.00%

D Factors
41.0% NB
59.0% SB
39.0% EB

DESIGN HOUR TURNING MOVEMENTS IN YEAR 2025

Belle Terre Blvd
(8200)
434

6.8% 30 | 93.2% 404 | 0.0% 0

Zonal Geranium Tr (N) - PM
0 0.0%
0 0.0% 0 0
0 0.0%

(650) 23
77.3% 18
0.0% 0
22.7% 5

Zonal Geranium Tr (N) - PM

5 | 296 | 0
1.6% | 98.4% | 0.0%
301
(8200)
Belle Terre Blvd

(XXXXX)	2025 AADT
XXXX	2025 DDHV
K ML =	9.00%
K SS =	9.00%

D Factors
41.0% NB
59.0% SB
39.0% EB

DESIGN HOUR TURNING MOVEMENTS IN YEAR 2030

Belle Terre Blvd
(9500)
504

6.2% 31 | 93.8% 473 | 0.0% 0

Zonal Geranium Tr (N) - PM
0 0.0%
0 0.0% 0 0
0 0.0%

(700) 25
76.7% 19
0.0% 0
23.3% 6

Zonal Geranium Tr (N) - PM

5 | 346 | 0
1.5% | 98.5% | 0.0%
351
(9500)
Belle Terre Blvd

(XXXXX)	2030 AADT
XXXX	2030 DDHV
K ML =	9.00%
K SS =	9.00%

D Factors
41.0% NB
59.0% SB
39.0% EB

PROJECT TRAFFIC FOR Belle Terre Blvd AT Zonal Geranium Tr (N) - PM

2015 INPUT TMCs COMPARED TO 2015 DHV

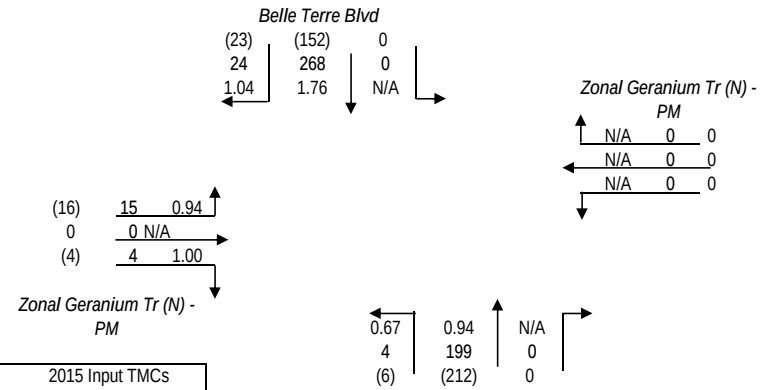

(XXX)	2015 Input TMCs
XXX	Calculated 2015 DHV
X.XX	Ratio

2015 INPUT TMCs COMPARED TO 2020 DHV

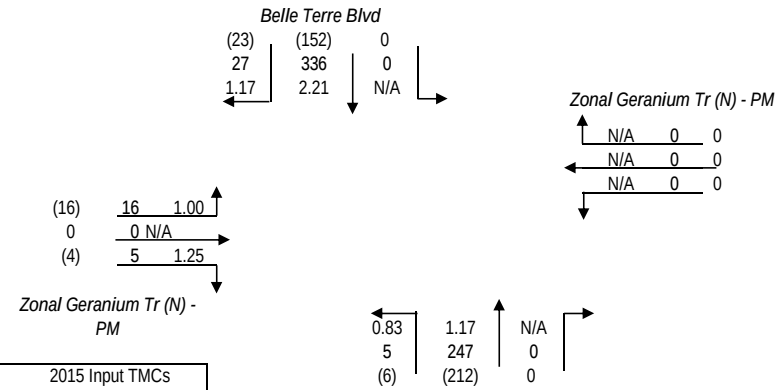

(XXX)	2015 Input TMCs
XXX	Calculated 2020 DHV
X.XX	Ratio

2015 INPUT TMCs COMPARED TO 2025 DHV

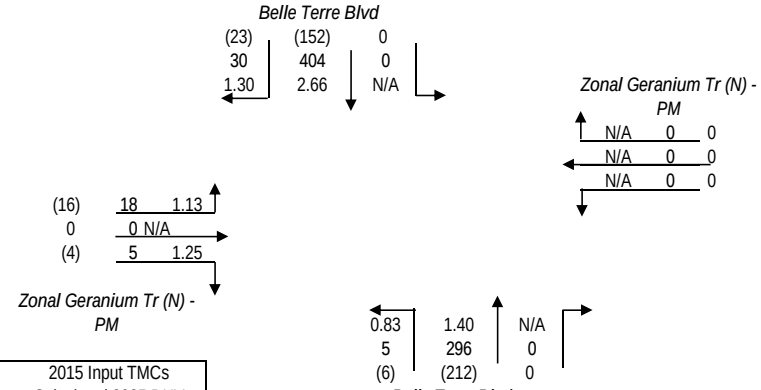

(XXX)	2015 Input TMCs
XXX	Calculated 2025 DHV
X.XX	Ratio

2015 INPUT TMCs COMPARED TO 2030 DHV

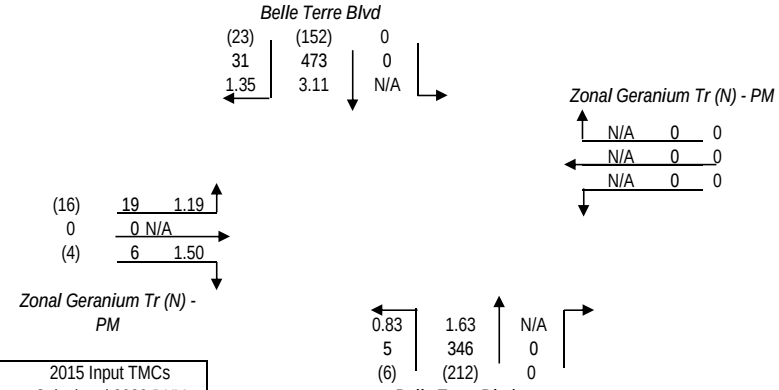

(XXX)	2015 Input TMCs
XXX	Calculated 2030 DHV
X.XX	Ratio

TURNS5 ANALYSIS SHEET - INPUT

Analyst:	-
Date:	13-Nov-15
Highway:	Belle Terre Blvd
Intersection:	Laguna Forest Tr - PM
Project:	Belle Terre Blvd/Pkwy Intersection Analysis
County:	Flagler

Is this a 4 way intersection?

- ○ Yes, my intersection has four approaches

If not, which 3 approaches exist in the intersection?

- ○ EB, WB, and SB
- ○ EB, WB, and NB
- ○ EB, SB, and NB
- ◉ WB, SB, and NB

Is the Mainline Oriented North/South? Enter Yes or No: ◉ Yes ○ No

K Factors	
Mainline	9.00%
Side street	9.00%

D Factors	*Mainline*
Northbound (NB)	41.0%
Southbound (SB)	59.0%
	Side street
Westbound (WB)	39.0%
Eastbound (EB)	0.0%

Do you have FTSUTMS Model Year traffic from which you would like to interpolate/extrapolate for project years? (Y/N)

Enter Yes or No: ◉ Yes ○ No

If "Yes" go to cell C47 — If "No" go to cell C31

Enter Year and Growth Rates from Base Year:

	Year	*Rate* (1.0% = 0.01) Mainline	Side Street
Base	2015	0.00%	0.00%
Opening	2025		
Mid	2035		
Design	2045		

Mainline Growth Function: ◉ Linear ○ Exponential ○ Decaying

Side Street Growth Function: ◉ Linear ○ Exponential ○ Decaying

Enter Base Year AADTs for Volume Comparison:
(growth rates are used to calculate other project years)

From West: EB Approach	*From East: WB Approach*	*From North: SB Approach*	*From South: NB Approach*	***TOTAL***
0	0	0	0	0

Enter Project and Model Years

	Year
Base	2015
Opening	2020
Mid	2025
Design	2030
Model	2030

Enter Base and Model Year AADTs for Volume Comparison:
(volumes for other project years are calculated by interpolation)

	From West: EB Approach	*From East: WB Approach*	*From North: SB Approach*	*From South: NB Approach*	***TOTAL***
2015	0	1167	5500	5500	12167
2030	0	1500	9500	9500	20500

First Guess Turning % Option Used
Existing Turning Movement Counts

		1st Guess Turning %'s for AADT Balancing	**Actual/Counted Traffic for 2015**
(EB LT)	*West-to-North*	0.0%	0
(EB THRU)	*West-to-East*	0.0%	0
(EB RT)	*West-to-South*	0.0%	0
(WB LT)	*East-to-South*	13.5%	5
(WB THRU)	*East-to-West*	0.0%	0
(WB RT)	*East-to-North*	86.5%	32
(SB LT)	*North-to-East*	24.1%	54
(SB THRU)	*North-to-South*	75.9%	170
(SB RT)	*North-to-West*	0.0%	0
(NB LT)	*South-to-West*	0.0%	0
(NB THRU)	*South-to-North*	97.8%	223
(NB RT)	*South-to-East*	2.2%	5

Desired Closure: 4.00

Existing Year AADTs — Only the existing year total departure volumes [AADT*K*(1-D)] will be used to calculate the turning percentages first guess.

Existing Turning Movement Counts — The turning percentages first guess is the same as the ***actual distribution of turning volumes entered***. No balancing technique is used.

FSUTMS Model Year AADTs — Only the FSUTMS model year departure volumes [AADT*K*(1-D)] will be used to calculate the turning percentages first guess.

PROJECT TRAFFIC FOR Belle Terre Blvd AT Laguna Forest Tr - PM

DESIGN HOUR TURNING MOVEMENTS IN YEAR 2015

Belle Terre Blvd
(5500)
292
0.0% 0 | 82.6% 241 | 17.4% 51

Laguna Forest Tr - PM
33 81.3%
0 0.0% 41 (1200)
8 18.7%

0.0% 0
0 0 0.0% 0
0.0% 0

Laguna Forest Tr - PM

0 | 199 | 4
0.0% | 97.8% | 2.2%
203
(5500)
Belle Terre Blvd

(XXXXX)	2015 AADT
XXXX	2015 DDHV
K ML =	9.00%
K SS =	9.00%

D Factors
41.0% NB
59.0% SB
39.0% WB

DESIGN HOUR TURNING MOVEMENTS IN YEAR 2020

Belle Terre Blvd
(6800)
363
0.0% 0 | 84.4% 306 | 15.6% 57

Laguna Forest Tr - PM
37 81.5%
0 0.0% 45 (1300)
8 18.5%

0.0% 0
0 0 0.0% 0
0.0% 0

Laguna Forest Tr - PM

0 | 247 | 5
0.0% | 98.1% | 1.9%
252
(6800)
Belle Terre Blvd

(XXXXX)	2020 AADT
XXXX	2020 DDHV
K ML =	9.00%
K SS =	9.00%

D Factors
41.0% NB
59.0% SB
39.0% WB

DESIGN HOUR TURNING MOVEMENTS IN YEAR 2025

Belle Terre Blvd
(8200)
434
0.0% 0 | 85.6% 372 | 14.4% 62

Laguna Forest Tr - PM
40 81.6%
0 0.0% 49 (1400)
9 18.4%

0.0% 0
0 0 0.0% 0
0.0% 0

Laguna Forest Tr - PM

0 | 296 | 5
0.0% | 98.3% | 1.7%
301
(8200)
Belle Terre Blvd

(XXXXX)	2025 AADT
XXXX	2025 DDHV
K ML =	9.00%
K SS =	9.00%

D Factors
41.0% NB
59.0% SB
39.0% WB

DESIGN HOUR TURNING MOVEMENTS IN YEAR 2030

Belle Terre Blvd
(9500)
504
0.0% 0 | 86.6% 436 | 13.4% 68

Laguna Forest Tr - PM
43 80.6%
0 0.0% 53 (1500)
10 19.4%

0.0% 0
0 0 0.0% 0
0.0% 0

Laguna Forest Tr - PM

0 | 345 | 6
0.0% | 98.3% | 1.7%
351
(9500)
Belle Terre Blvd

(XXXXX)	2030 AADT
XXXX	2030 DDHV
K ML =	9.00%
K SS =	9.00%

D Factors
41.0% NB
59.0% SB
39.0% WB

PROJECT TRAFFIC FOR Belle Terre Blvd AT Laguna Forest Tr - PM

2015 INPUT TMCs COMPARED TO 2015 DHV

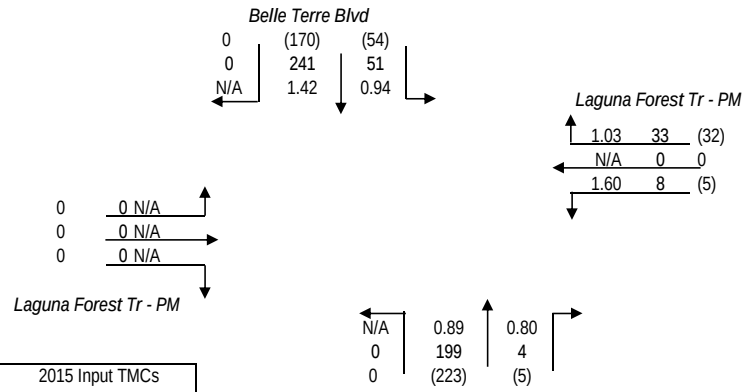

(XXX)	2015 Input TMCs
XXX	Calculated 2015 DHV
X.XX	Ratio

2015 INPUT TMCs COMPARED TO 2020 DHV

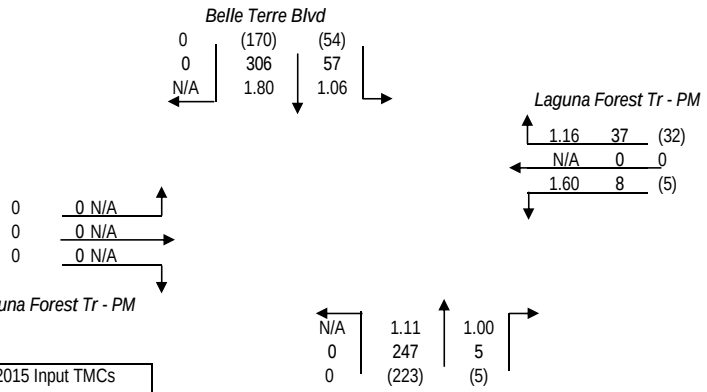

(XXX)	2015 Input TMCs
XXX	Calculated 2020 DHV
X.XX	Ratio

2015 INPUT TMCs COMPARED TO 2025 DHV

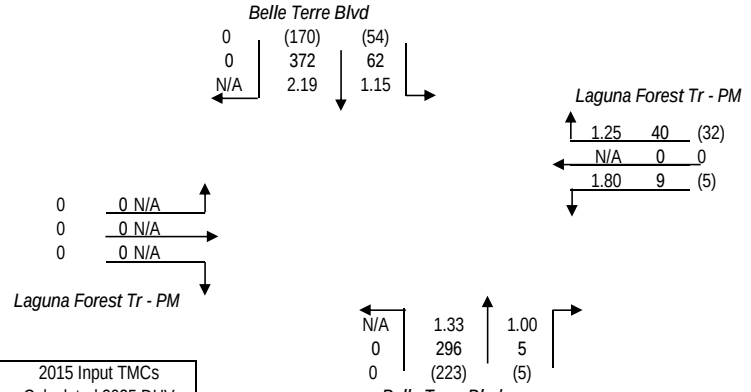

(XXX)	2015 Input TMCs
XXX	Calculated 2025 DHV
X.XX	Ratio

2015 INPUT TMCs COMPARED TO 2030 DHV

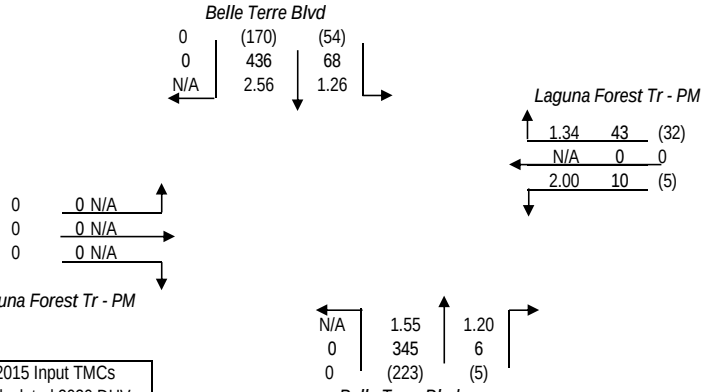

(XXX)	2015 Input TMCs
XXX	Calculated 2030 DHV
X.XX	Ratio

TURNS5 ANALYSIS SHEET - INPUT

Analyst: -
Date: 13-Nov-15
Highway: Belle Terre Blvd
Intersection: Zinnia Tr (S) - PM
Project: Belle Terre Blvd/Pkwy Intersection Analysis
County: Flagler

Is this a 4 way intersection?
- ○ Yes, my intersection has four approaches

If not, which 3 approaches exist in the intersection?
- ○ EB, WB, and SB
- ○ EB, WB, and NB
- ◉ EB, SB, and NB
- ○ WB, SB, and NB

Is the Mainline Oriented North/South? (Enter Yes or No)
- ◉ Yes
- ○ No

K Factors	
Mainline	9.00%
Side street	9.00%

D Factors	*Mainline*
Northbound (NB)	41.0%
Southbound (SB)	59.0%
	Side street
Westbound (WB)	0.0%
Eastbound (EB)	39.0%

Do you have FTSUTMS Model Year traffic from which you would like to interpolate/extrapolate for project years? (Y/N) (Enter Yes or No)
- ◉ Yes
- ○ No

If "Yes" go to cell C47 If "No" go to cell C31

Enter Year and Growth Rates from Base Year:

	Year	*Rate* (1.0% = 0.01) Mainline	Side Street
Base	2015	0.00%	0.00%
Opening	2025		
Mid	2035		
Design	2045		

Mainline Growth Function
- ◉ Linear
- ○ Exponential
- ○ Decaying

Side Street Growth Function
- ◉ Linear
- ○ Exponential
- ○ Decaying

Enter Base Year AADTs for Volume Comparison:
(growth rates are used to calculate other project years)

From West: EB Approach	*From East: WB Approach*	*From North: SB Approach*	*From South: NB Approach*	***TOTAL***
0	0	0	0	0

Enter Project and Model Years

	Year
Base	2015
Opening	2020
Mid	2025
Design	2030
Model	2030

Enter Base and Model Year AADTs for Volume Comparison:
(volumes for other project years are calculated by interpolation)

	From West: EB Approach	*From East: WB Approach*	*From North: SB Approach*	*From South: NB Approach*	***TOTAL***
2015	500	0	5500	5500	11500
2030	640	0	9500	9500	19640

First Guess Turning % Option Used
Existing Turning Movement Counts

		1st Guess Turning %'s for AADT Balancing	**Actual/Counted Traffic for 2015**
(EB LT)	*West-to-North*	63.6%	14
(EB THRU)	*West-to-East*	0.0%	0
(EB RT)	*West-to-South*	36.4%	8
(WB LT)	*East-to-South*	0.0%	0
(WB THRU)	*East-to-West*	0.0%	0
(WB RT)	*East-to-North*	0.0%	0
(SB LT)	*North-to-East*	0.0%	0
(SB THRU)	*North-to-South*	92.3%	216
(SB RT)	*North-to-West*	7.7%	18
(NB LT)	*South-to-West*	2.0%	5
(NB THRU)	*South-to-North*	98.0%	250
(NB RT)	*South-to-East*	0.0%	0

Desired Closure: 1.00

Existing Year AADTs — Only the existing year total departure volumes [AADT*K*(1-D)] will be used to calculate the turning percentages first guess.

Existing Turning Movement Counts — The turning percentages first guess is the same as the ***actual distribution of turning volumes entered***. No balancing technique is used.

FSUTMS Model Year AADTs — Only the FSUTMS model year departure volumes [AADT*K*(1-D)] will be used to calculate the turning percentages first guess.

PROJECT TRAFFIC FOR Belle Terre Blvd AT Zinnia Tr (S) - PM

DESIGN HOUR TURNING MOVEMENTS IN YEAR 2015

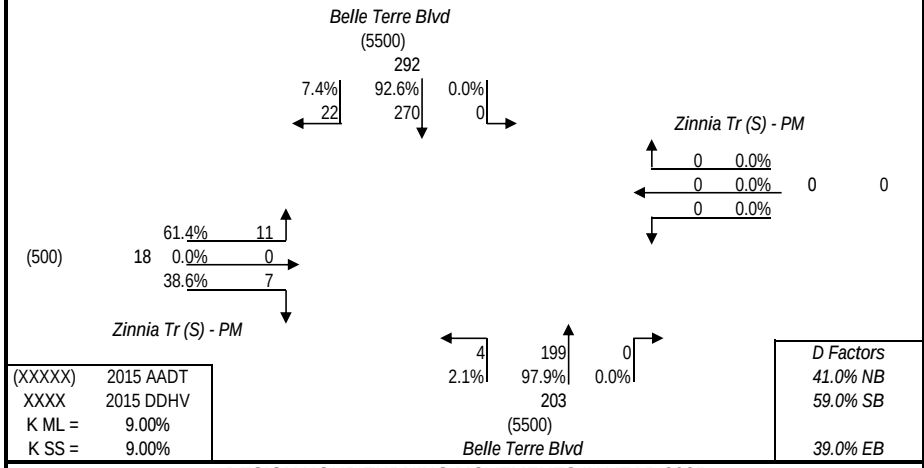

(XXXXX)	2015 AADT	
XXXX	2015 DDHV	
K ML =	9.00%	
K SS =	9.00%	

D Factors
41.0% NB
59.0% SB
39.0% EB

DESIGN HOUR TURNING MOVEMENTS IN YEAR 2020

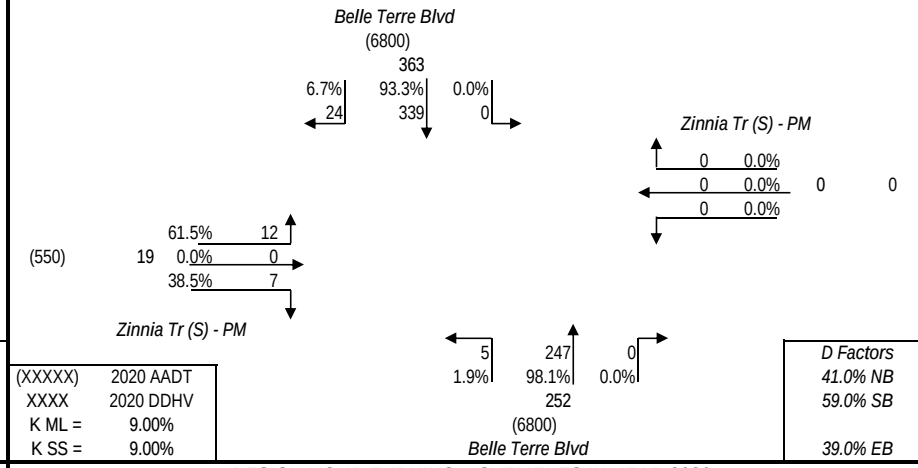

(XXXXX)	2020 AADT	
XXXX	2020 DDHV	
K ML =	9.00%	
K SS =	9.00%	

D Factors
41.0% NB
59.0% SB
39.0% EB

DESIGN HOUR TURNING MOVEMENTS IN YEAR 2025

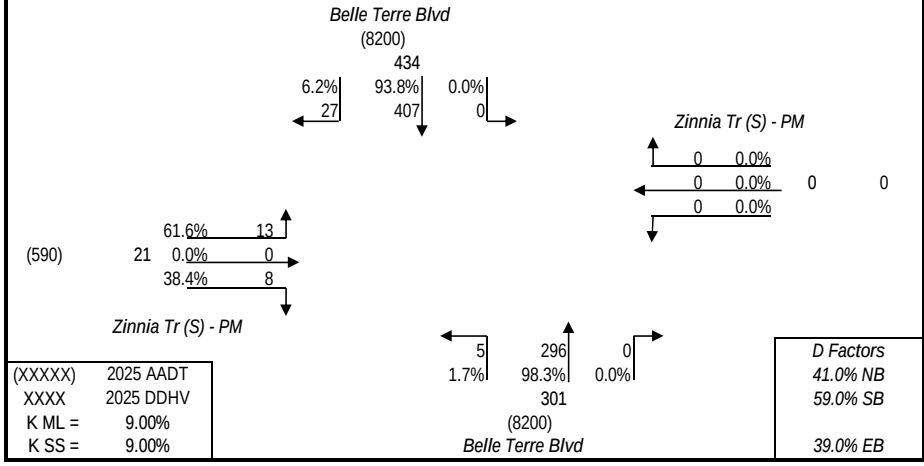

(XXXXX)	2025 AADT	
XXXX	2025 DDHV	
K ML =	9.00%	
K SS =	9.00%	

D Factors
41.0% NB
59.0% SB
39.0% EB

DESIGN HOUR TURNING MOVEMENTS IN YEAR 2030

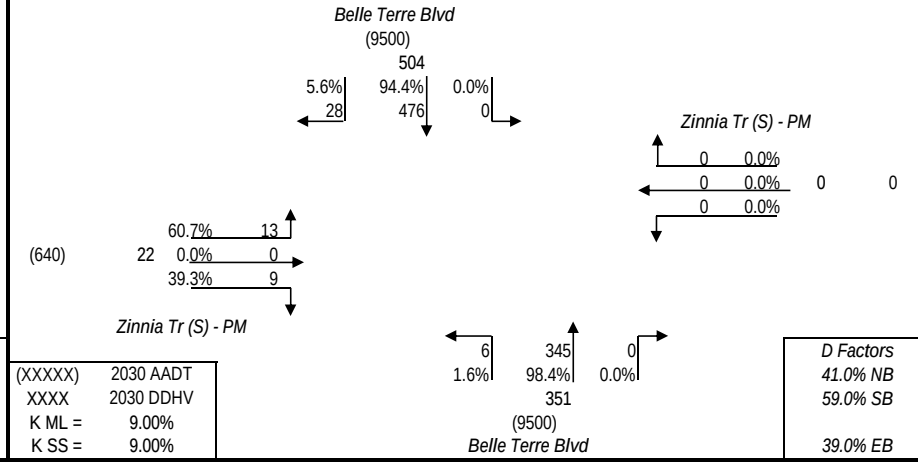

(XXXXX)	2030 AADT	
XXXX	2030 DDHV	
K ML =	9.00%	
K SS =	9.00%	

D Factors
41.0% NB
59.0% SB
39.0% EB

PROJECT TRAFFIC FOR Belle Terre Blvd AT Zinnia Tr (S) - PM

2015 INPUT TMCs COMPARED TO 2015 DHV

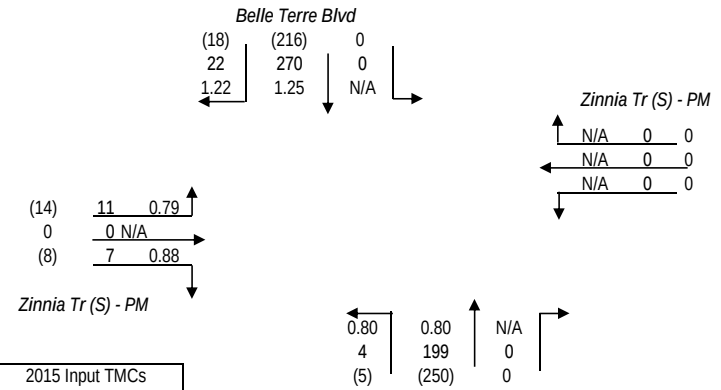

(XXX)	2015 Input TMCs
XXX	Calculated 2015 DHV
X.XX	Ratio

2015 INPUT TMCs COMPARED TO 2020 DHV

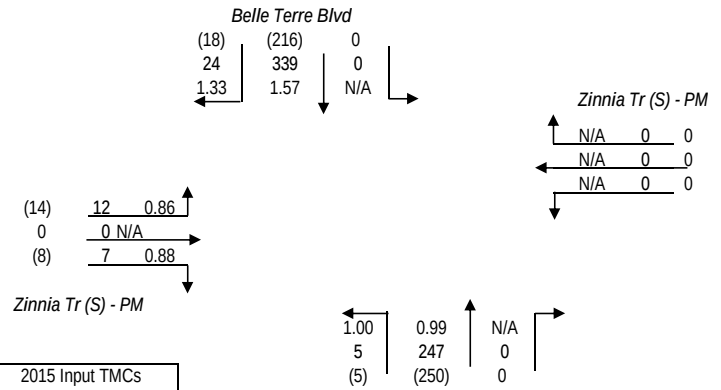

(XXX)	2015 Input TMCs
XXX	Calculated 2020 DHV
X.XX	Ratio

2015 INPUT TMCs COMPARED TO 2025 DHV

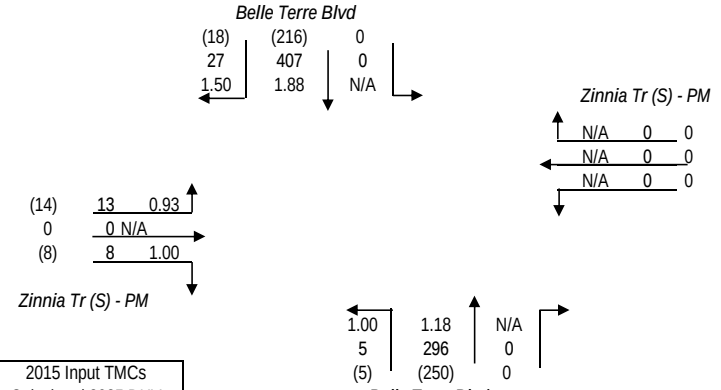

(XXX)	2015 Input TMCs
XXX	Calculated 2025 DHV
X.XX	Ratio

2015 INPUT TMCs COMPARED TO 2030 DHV

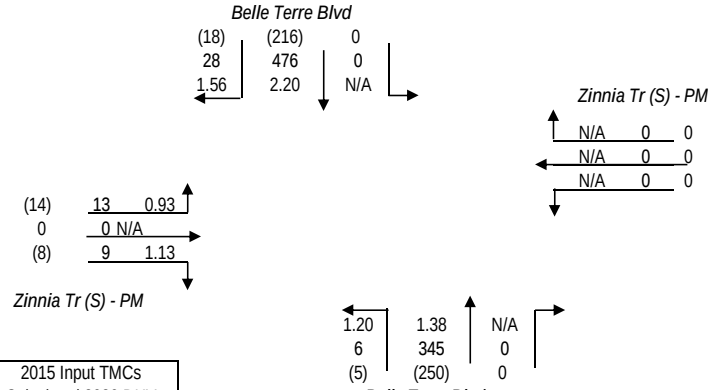

(XXX)	2015 Input TMCs
XXX	Calculated 2030 DHV
X.XX	Ratio

TURNS5 ANALYSIS SHEET - INPUT

Analyst:	-
Date:	13-Nov-15
Highway:	Belle Terre Blvd
Intersection:	Zinnia Tr (N) - PM
Project:	Belle Terre Blvd/Pkwy Intersection Analysis
County:	Flagler

Is this a 4 way intersection?

- ○ Yes, my intersection has four approaches

If not, which 3 approaches exist in the intersection?

- ○ EB, WB, and SB
- ○ EB, WB, and NB
- ◉ EB, SB, and NB
- ○ WB, SB, and NB

Is the Mainline Oriented North/South? Enter Yes or No: ◉ Yes ○ No

K Factors	
Mainline	9.00%
Side street	9.00%

D Factors	
Mainline	
Northbound (NB)	41.0%
Southbound (SB)	59.0%
Side street	
Westbound (WB)	0.0%
Eastbound (EB)	39.0%

Do you have FTSUTMS Model Year traffic from which you would like to interpolate/extrapolate for project years? (Y/N)

Enter Yes or No: ◉ Yes ○ No

If "Yes" go to cell C47 — If "No" go to cell C31

Enter Year and Growth Rates from Base Year:

	Year	*Rate* (1.0% = 0.01) Mainline	Side Street
Base	2015	0.00%	0.00%
Opening	2025		
Mid	2035		
Design	2045		

Mainline Growth Function: ◉ Linear ○ Exponential ○ Decaying

Side Street Growth Function: ◉ Linear ○ Exponential ○ Decaying

Enter Base Year AADTs for Volume Comparison:
(growth rates are used to calculate other project years)

From West: EB Approach	*From East: WB Approach*	*From North: SB Approach*	*From South: NB Approach*	***TOTAL***
0	0	0	0	0

Enter Project and Model Years

	Year
Base	2015
Opening	2020
Mid	2025
Design	2030
Model	2030

Enter Base and Model Year AADTs for Volume Comparison:
(volumes for other project years are calculated by interpolation)

	From West: EB Approach	*From East: WB Approach*	*From North: SB Approach*	*From South: NB Approach*	***TOTAL***
2015	267	0	5500	5500	11267
2030	340	0	9500	9500	19340

		1st Guess Turning %'s for AADT Balancing	**Actual/Counted Traffic for 2015**
(EB LT)	*West-to-North*	75.0%	6
(EB THRU)	*West-to-East*	0.0%	0
(EB RT)	*West-to-South*	25.0%	2
(WB LT)	*East-to-South*	0.0%	0
(WB THRU)	*East-to-West*	0.0%	0
(WB RT)	*East-to-North*	0.0%	0
(SB LT)	*North-to-East*	0.0%	0
(SB THRU)	*North-to-South*	95.5%	232
(SB RT)	*North-to-West*	4.5%	11
(NB LT)	*South-to-West*	1.9%	5
(NB THRU)	*South-to-North*	98.1%	259
(NB RT)	*South-to-East*	0.0%	0

Desired Closure: 1.00

Existing Year AADTs

Existing Turning Movement Counts

FSUTMS Model Year AADTs

First Guess Turning % Option Used
Existing Turning Movement Counts

Only the existing year total departure volumes [AADT*K*(1-D)] will be used to calculate the turning percentages first guess.

The turning percentages first guess is the same as the ***actual distribution of turning volumes entered***. No balancing technique is used.

Only the FSUTMS model year departure volumes [AADT*K*(1-D)] will be used to calculate the turning percentages first guess.

PROJECT TRAFFIC FOR Belle Terre Blvd AT Zinnia Tr (N) - PM

DESIGN HOUR TURNING MOVEMENTS IN YEAR 2015

Belle Terre Blvd
(5500)
292
3.8% 11 | 96.2% 281 | 0.0% 0

Zinnia Tr (N) - PM
0 0.0%
0 0.0% 0 0
0 0.0%

(270) 9
73.9% 7
0.0% 0
26.1% 2

Zinnia Tr (N) - PM

3 | 200 | 0
1.7% | 98.3% | 0.0%
203
(5500)
Belle Terre Blvd

(XXXXX)	2015 AADT
XXXX	2015 DDHV
K ML =	9.00%
K SS =	9.00%

D Factors
41.0% NB
59.0% SB
39.0% EB

DESIGN HOUR TURNING MOVEMENTS IN YEAR 2020

Belle Terre Blvd
(6800)
363
3.3% 12 | 96.7% 351 | 0.0% 0

Zinnia Tr (N) - PM
0 0.0%
0 0.0% 0 0
0 0.0%

(290) 10
74.0% 7
0.0% 0
26.0% 3

Zinnia Tr (N) - PM

4 | 248 | 0
1.5% | 98.5% | 0.0%
252
(6800)
Belle Terre Blvd

(XXXXX)	2020 AADT
XXXX	2020 DDHV
K ML =	9.00%
K SS =	9.00%

D Factors
41.0% NB
59.0% SB
39.0% EB

DESIGN HOUR TURNING MOVEMENTS IN YEAR 2025

Belle Terre Blvd
(8200)
434
3.0% 13 | 97.0% 421 | 0.0% 0

Zinnia Tr (N) - PM
0 0.0%
0 0.0% 0 0
0 0.0%

(320) 11
74.0% 8
0.0% 0
26.0% 3

Zinnia Tr (N) - PM

4 | 297 | 0
1.3% | 98.7% | 0.0%
301
(8200)
Belle Terre Blvd

(XXXXX)	2025 AADT
XXXX	2025 DDHV
K ML =	9.00%
K SS =	9.00%

D Factors
41.0% NB
59.0% SB
39.0% EB

DESIGN HOUR TURNING MOVEMENTS IN YEAR 2030

Belle Terre Blvd
(9500)
504
2.8% 14 | 97.2% 490 | 0.0% 0

Zinnia Tr (N) - PM
0 0.0%
0 0.0% 0 0
0 0.0%

(340) 12
73.7% 9
0.0% 0
26.3% 3

Zinnia Tr (N) - PM

5 | 346 | 0
1.3% | 98.7% | 0.0%
351
(9500)
Belle Terre Blvd

(XXXXX)	2030 AADT
XXXX	2030 DDHV
K ML =	9.00%
K SS =	9.00%

D Factors
41.0% NB
59.0% SB
39.0% EB

PROJECT TRAFFIC FOR Belle Terre Blvd AT Zinnia Tr (N) - PM

2015 INPUT TMCs COMPARED TO 2015 DHV

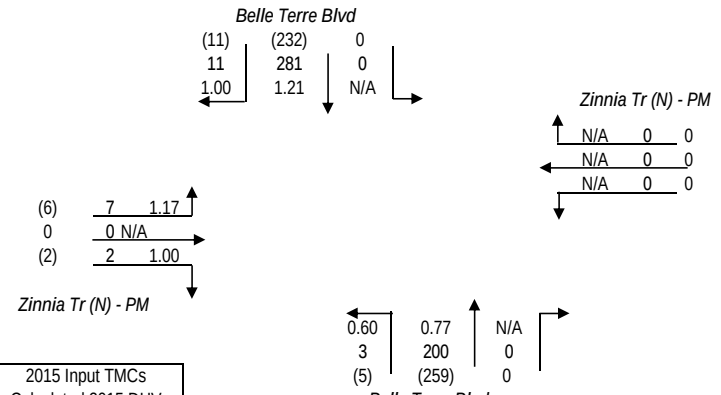

(XXX)	2015 Input TMCs
XXX	Calculated 2015 DHV
X.XX	Ratio

2015 INPUT TMCs COMPARED TO 2020 DHV

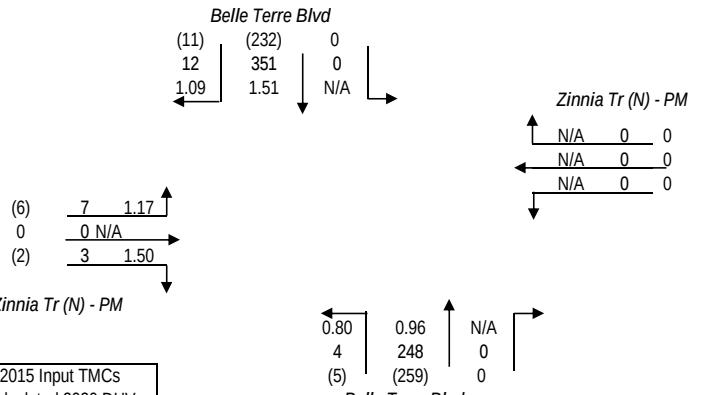

(XXX)	2015 Input TMCs
XXX	Calculated 2020 DHV
X.XX	Ratio

2015 INPUT TMCs COMPARED TO 2025 DHV

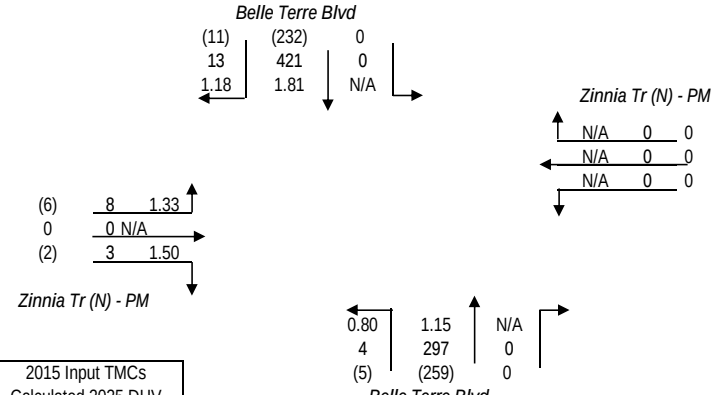

(XXX)	2015 Input TMCs
XXX	Calculated 2025 DHV
X.XX	Ratio

2015 INPUT TMCs COMPARED TO 2030 DHV

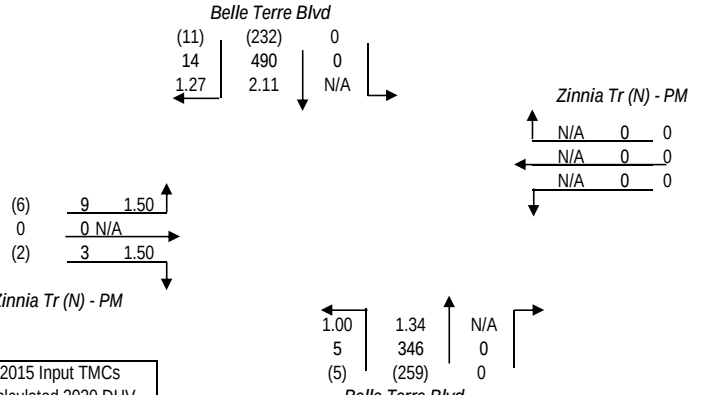

(XXX)	2015 Input TMCs
XXX	Calculated 2030 DHV
X.XX	Ratio

TURNS5 ANALYSIS SHEET - INPUT

Analyst:	-
Date:	13-Nov-15
Highway:	Belle Terre Blvd
Intersection:	Zaun Tr - PM
Project:	Belle Terre Blvd/Pkwy Intersection Analysis
County:	Flagler

Is this a 4 way intersection?

- ○ Yes, my intersection has four approaches

If not, which 3 approaches exist in the intersection?

- ○ EB, WB, and SB
- ○ EB, WB, and NB
- ◉ EB, SB, and NB
- ○ WB, SB, and NB

Is the Mainline Oriented North/South? (Enter Yes or No)

- ◉ Yes
- ○ No

K Factors	Mainline	**D Factors**	*Mainline*
	9.00%	Northbound (NB)	41.0%
	Side street	Southbound (SB)	59.0%
	9.00%		*Side street*
		Westbound (WB)	0.0%
		Eastbound (EB)	39.0%

Do you have FTSUTMS Model Year traffic from which you would like to interpolate/extrapolate for project years? (Y/N) (Enter Yes or No)

- ◉ Yes
- ○ No

If "Yes" go to cell C47 If "No" go to cell C31

Enter Year and Growth Rates from Base Year:

	Year	*Rate* (1.0% = 0.01) Mainline	Side Street
Base	2015	0.00%	0.00%
Opening	2025		
Mid	2035		
Design	2045		

Mainline Growth Function

- ◉ Linear
- ○ Exponential
- ○ Decaying

Side Street Growth Function

- ◉ Linear
- ○ Exponential
- ○ Decaying

Enter Base Year AADTs for Volume Comparison:
(growth rates are used to calculate other project years)

From West: EB Approach	*From East: WB Approach*	*From North: SB Approach*	*From South: NB Approach*	***TOTAL***
0	0	0	0	0

Enter Project and Model Years

	Year
Base	2015
Opening	2020
Mid	2025
Design	2030
Model	2030

Enter Base and Model Year AADTs for Volume Comparison:
(volumes for other project years are calculated by interpolation)

	From West: EB Approach	*From East: WB Approach*	*From North: SB Approach*	*From South: NB Approach*	***TOTAL***
2015	400	0	6000	5500	11900
2030	510	0	10000	9500	20010

		1st Guess Turning %'s for AADT Balancing	**Actual/Counted Traffic for 2015**
(EB LT)	*West-to-North*	83.3%	10
(EB THRU)	*West-to-East*	0.0%	0
(EB RT)	*West-to-South*	16.7%	2
(WB LT)	*East-to-South*	0.0%	0
(WB THRU)	*East-to-West*	0.0%	0
(WB RT)	*East-to-North*	0.0%	0
(SB LT)	*North-to-East*	0.0%	0
(SB THRU)	*North-to-South*	93.8%	241
(SB RT)	*North-to-West*	6.2%	16
(NB LT)	*South-to-West*	3.0%	8
(NB THRU)	*South-to-North*	97.0%	257
(NB RT)	*South-to-East*	0.0%	0

Desired Closure: 1.00

Existing Year AADTs

Existing Turning Movement Counts

FSUTMS Model Year AADTs

First Guess Turning % Option Used
Existing Turning Movement Counts

Only the existing year total departure volumes [AADT*K*(1-D)] will be used to calculate the turning percentages first guess.

The turning percentages first guess is the same as the ***actual distribution of turning volumes entered***. No balancing technique is used.

Only the FSUTMS model year departure volumes [AADT*K*(1-D)] will be used to calculate the turning percentages first guess.

PROJECT TRAFFIC FOR Belle Terre Blvd AT Zaun Tr - PM

DESIGN HOUR TURNING MOVEMENTS IN YEAR 2015

Belle Terre Blvd
(6000)
319
5.5% 18 | 94.5% 301 | 0.0% 0

Zaun Tr - PM
0 0.0%
0 0.0% 0 0
0 0.0%

(400) 14
84.5% 12
0.0% 0
15.5% 2

Zaun Tr - PM

5 | 198 | 0
2.4% | 97.6% | 0.0%
203
(5500)
Belle Terre Blvd

(XXXXX)	2015 AADT	
XXXX	2015 DDHV	
K ML =	9.00%	
K SS =	9.00%	

D Factors
41.0% NB
59.0% SB
39.0% EB

DESIGN HOUR TURNING MOVEMENTS IN YEAR 2020

Belle Terre Blvd
(7300)
389
4.8% 19 | 95.2% 370 | 0.0% 0

Zaun Tr - PM
0 0.0%
0 0.0% 0 0
0 0.0%

(440) 15
84.2% 13
0.0% 0
15.8% 2

Zaun Tr - PM

6 | 246 | 0
2.2% | 97.8% | 0.0%
252
(6800)
Belle Terre Blvd

(XXXXX)	2020 AADT	
XXXX	2020 DDHV	
K ML =	9.00%	
K SS =	9.00%	

D Factors
41.0% NB
59.0% SB
39.0% EB

DESIGN HOUR TURNING MOVEMENTS IN YEAR 2025

Belle Terre Blvd
(8700)
460
4.4% 20 | 95.6% 440 | 0.0% 0

Zaun Tr - PM
0 0.0%
0 0.0% 0 0
0 0.0%

(470) 17
83.9% 14
0.0% 0
16.1% 3

Zaun Tr - PM

6 | 295 | 0
2.0% | 98.0% | 0.0%
301
(8200)
Belle Terre Blvd

(XXXXX)	2025 AADT	
XXXX	2025 DDHV	
K ML =	9.00%	
K SS =	9.00%	

D Factors
41.0% NB
59.0% SB
39.0% EB

DESIGN HOUR TURNING MOVEMENTS IN YEAR 2030

Belle Terre Blvd
(10000)
531
4.1% 22 | 95.9% 509 | 0.0% 0

Zaun Tr - PM
0 0.0%
0 0.0% 0 0
0 0.0%

(510) 18
83.7% 15
0.0% 0
16.3% 3

Zaun Tr - PM

7 | 344 | 0
1.9% | 98.1% | 0.0%
351
(9500)
Belle Terre Blvd

(XXXXX)	2030 AADT	
XXXX	2030 DDHV	
K ML =	9.00%	
K SS =	9.00%	

D Factors
41.0% NB
59.0% SB
39.0% EB

PROJECT TRAFFIC FOR Belle Terre Blvd AT Zaun Tr - PM

2015 INPUT TMCs COMPARED TO 2015 DHV

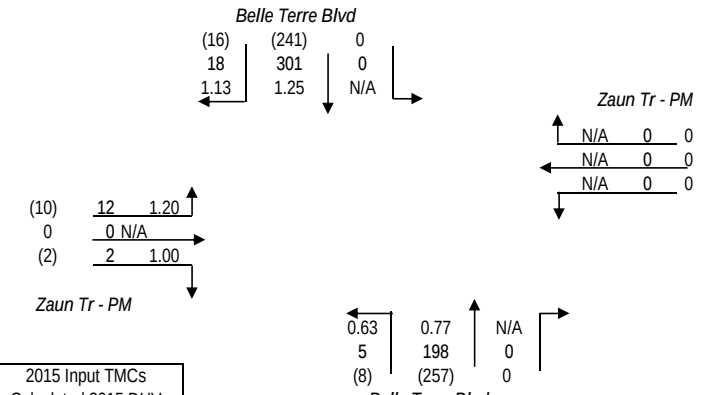

(XXX)	2015 Input TMCs
XXX	Calculated 2015 DHV
X.XX	Ratio

2015 INPUT TMCs COMPARED TO 2020 DHV

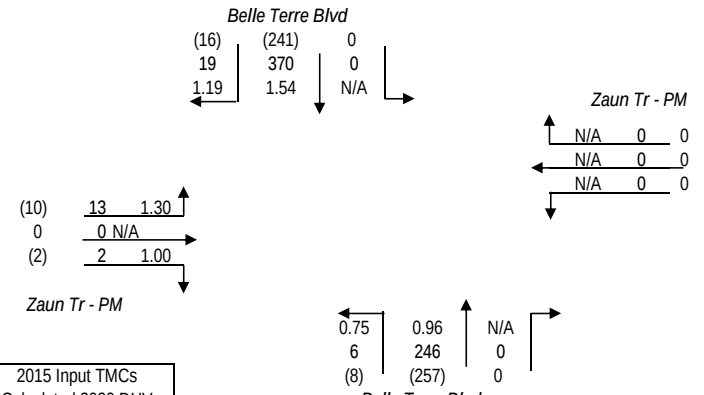

(XXX)	2015 Input TMCs
XXX	Calculated 2020 DHV
X.XX	Ratio

2015 INPUT TMCs COMPARED TO 2025 DHV

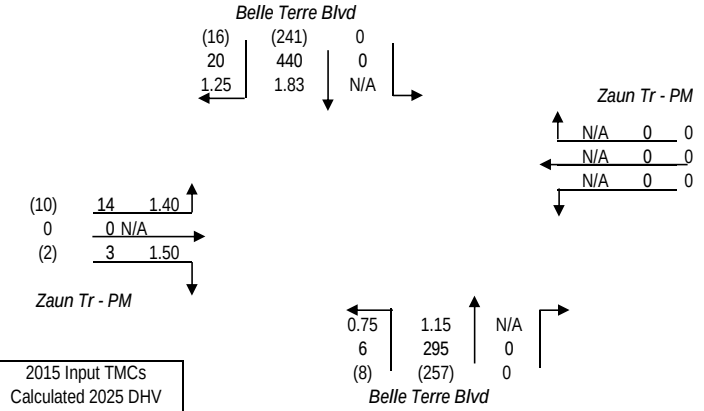

(XXX)	2015 Input TMCs
XXX	Calculated 2025 DHV
X.XX	Ratio

2015 INPUT TMCs COMPARED TO 2030 DHV

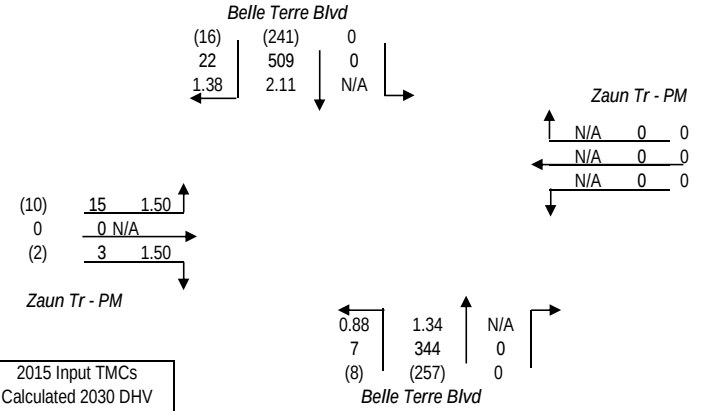

(XXX)	2015 Input TMCs
XXX	Calculated 2030 DHV
X.XX	Ratio

TURNS5 ANALYSIS SHEET - INPUT

Analyst: -
Date: 13-Nov-15
Highway: Belle Terre Blvd
Intersection: Zebulah's Tr (S) - PM
Project: Belle Terre Blvd/Pkwy Intersection Analysis
County: Flagler

Is this a 4 way intersection?
- ○ Yes, my intersection has four approaches

If not, which 3 approaches exist in the intersection?
- ○ EB, WB, and SB
- ○ EB, WB, and NB
- ◉ EB, SB, and NB
- ○ WB, SB, and NB

Is the Mainline Oriented North/South? (Enter Yes or No)
- ◉ Yes
- ○ No

K Factors	
Mainline	9.00%
Side street	9.00%

D Factors	*Mainline*
Northbound (NB)	41.0%
Southbound (SB)	59.0%
	Side street
Westbound (WB)	0.0%
Eastbound (EB)	39.0%

Do you have FTSUTMS Model Year traffic from which you would like to interpolate/extrapolate for project years? (Y/N) (Enter Yes or No)
- ◉ Yes
- ○ No

If "Yes" go to cell C47 If "No" go to cell C31

Enter Year and Growth Rates from Base Year:

	Year	*Rate* (1.0% = 0.01) Mainline	Side Street
Base	2015	0.00%	0.00%
Opening	2025		
Mid	2035		
Design	2045		

Mainline Growth Function
- ◉ Linear
- ○ Exponential
- ○ Decaying

Side Street Growth Function
- ◉ Linear
- ○ Exponential
- ○ Decaying

Enter Base Year AADTs for Volume Comparison:
(growth rates are used to calculate other project years)

From West: EB Approach	*From East: WB Approach*	*From North: SB Approach*	*From South: NB Approach*	***TOTAL***
0	0	0	0	0

Enter Project and Model Years

	Year
Base	2015
Opening	2020
Mid	2025
Design	2030
Model	2030

Enter Base and Model Year AADTs for Volume Comparison:
(volumes for other project years are calculated by interpolation)

	From West: EB Approach	*From East: WB Approach*	*From North: SB Approach*	*From South: NB Approach*	***TOTAL***
2015	611	0	6000	6000	12611
2030	790	0	11000	11000	22790

		1st Guess Turning %'s for AADT Balancing	**Actual/Counted Traffic for 2015**
(EB LT)	*West-to-North*	47.1%	8
(EB THRU)	*West-to-East*	0.0%	0
(EB RT)	*West-to-South*	52.9%	9
(WB LT)	*East-to-South*	0.0%	0
(WB THRU)	*East-to-West*	0.0%	0
(WB RT)	*East-to-North*	0.0%	0
(SB LT)	*North-to-East*	0.0%	0
(SB THRU)	*North-to-South*	91.5%	248
(SB RT)	*North-to-West*	8.5%	23
(NB LT)	*South-to-West*	5.6%	15
(NB THRU)	*South-to-North*	94.4%	252
(NB RT)	*South-to-East*	0.0%	0

Desired Closure: 1.00

Existing Year AADTs

Existing Turning Movement Counts

FSUTMS Model Year AADTs

First Guess Turning % Option Used
Existing Turning Movement Counts

Only the existing year total departure volumes [AADT*K*(1-D)] will be used to calculate the turning percentages first guess.

The turning percentages first guess is the same as the ***actual distribution of turning volumes entered***. No balancing technique is used.

Only the FSUTMS model year departure volumes [AADT*K*(1-D)] will be used to calculate the turning percentages first guess.

PROJECT TRAFFIC FOR Belle Terre Blvd AT Zebulah's Tr (S) - PM

DESIGN HOUR TURNING MOVEMENTS IN YEAR 2015

Belle Terre Blvd
(6000)
319
7.0% 22 | 93.0% 297 | 0.0% 0

Zebulah's Tr (S) - PM
0 0.0%
0 0.0% 0 0
0 0.0%

(610) 21
46.0% 10
0.0% 0
54.0% 11

Zebulah's Tr (S) - PM
11 4.8% | 210 95.2% | 0 0.0%
221
(6000)
Belle Terre Blvd

(XXXXX)	2015 AADT	
XXXX	2015 DDHV	
K ML =	9.00%	
K SS =	9.00%	

D Factors
41.0% NB
59.0% SB
39.0% EB

DESIGN HOUR TURNING MOVEMENTS IN YEAR 2020

Belle Terre Blvd
(7700)
407
6.0% 24 | 94.0% 383 | 0.0% 0

Zebulah's Tr (S) - PM
0 0.0%
0 0.0% 0 0
0 0.0%

(670) 24
46.0% 11
0.0% 0
54.0% 13

Zebulah's Tr (S) - PM
12 4.1% | 271 95.9% | 0 0.0%
283
(7700)
Belle Terre Blvd

(XXXXX)	2020 AADT	
XXXX	2020 DDHV	
K ML =	9.00%	
K SS =	9.00%	

D Factors
41.0% NB
59.0% SB
39.0% EB

DESIGN HOUR TURNING MOVEMENTS IN YEAR 2025

Belle Terre Blvd
(9300)
496
5.4% 27 | 94.6% 469 | 0.0% 0

Zebulah's Tr (S) - PM
0 0.0%
0 0.0% 0 0
0 0.0%

(730) 26
46.1% 12
0.0% 0
53.9% 14

Zebulah's Tr (S) - PM
12 3.6% | 332 96.4% | 0 0.0%
344
(9300)
Belle Terre Blvd

(XXXXX)	2025 AADT	
XXXX	2025 DDHV	
K ML =	9.00%	
K SS =	9.00%	

D Factors
41.0% NB
59.0% SB
39.0% EB

DESIGN HOUR TURNING MOVEMENTS IN YEAR 2030

Belle Terre Blvd
(11000)
584
4.9% 29 | 95.1% 555 | 0.0% 0

Zebulah's Tr (S) - PM
0 0.0%
0 0.0% 0 0
0 0.0%

(790) 28
45.2% 13
0.0% 0
54.8% 15

Zebulah's Tr (S) - PM
14 3.4% | 392 96.6% | 0 0.0%
406
(11000)
Belle Terre Blvd

(XXXXX)	2030 AADT	
XXXX	2030 DDHV	
K ML =	9.00%	
K SS =	9.00%	

D Factors
41.0% NB
59.0% SB
39.0% EB

PROJECT TRAFFIC FOR Belle Terre Blvd AT Zebulah's Tr (S) - PM

2015 INPUT TMCs COMPARED TO 2015 DHV

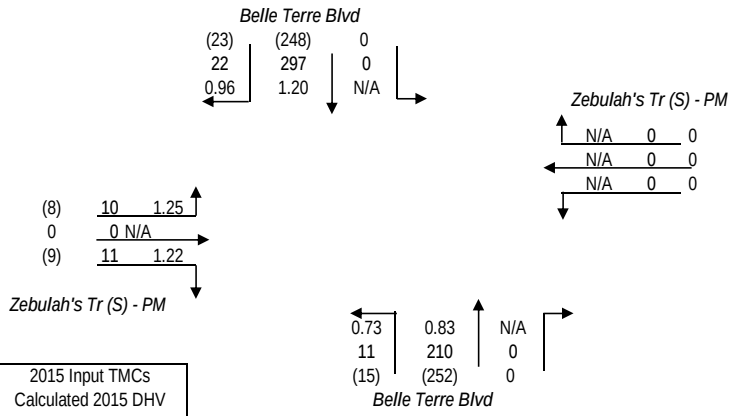

(XXX)	2015 Input TMCs
XXX	Calculated 2015 DHV
X.XX	Ratio

2015 INPUT TMCs COMPARED TO 2020 DHV

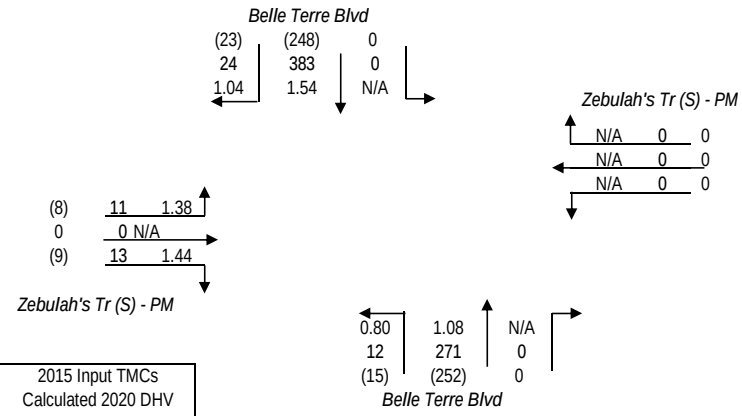

(XXX)	2015 Input TMCs
XXX	Calculated 2020 DHV
X.XX	Ratio

2015 INPUT TMCs COMPARED TO 2025 DHV

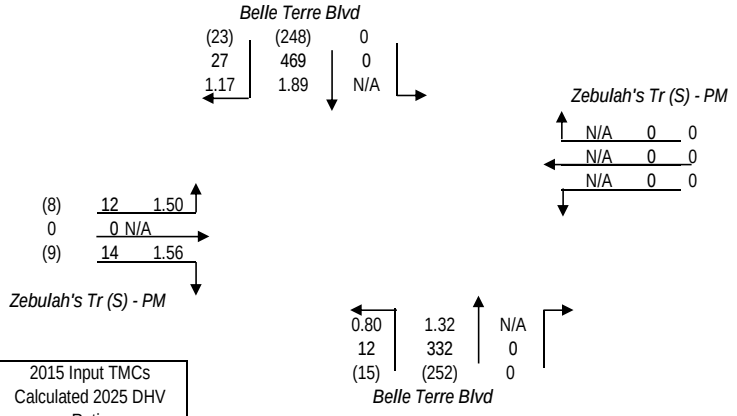

(XXX)	2015 Input TMCs
XXX	Calculated 2025 DHV
X.XX	Ratio

2015 INPUT TMCs COMPARED TO 2030 DHV

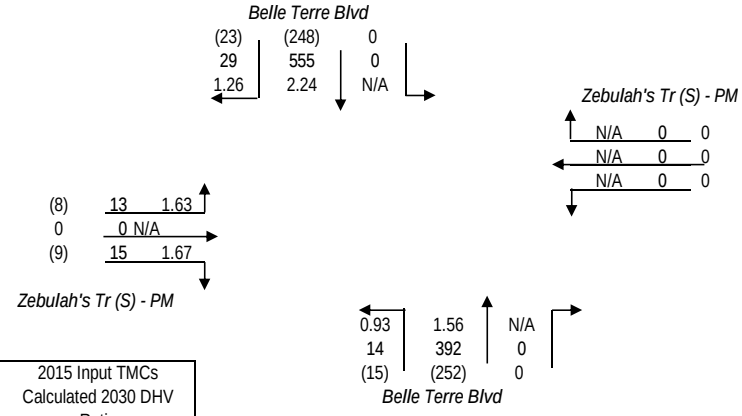

(XXX)	2015 Input TMCs
XXX	Calculated 2030 DHV
X.XX	Ratio

TURNS5 ANALYSIS SHEET - INPUT

Analyst:	-
Date:	13-Nov-15
Highway:	Belle Terre Blvd
Intersection:	Zebulah's Tr (N) - PM
Project:	Belle Terre Blvd/Pkwy Intersection Analysis
County:	Flagler

Is this a 4 way intersection?

- ○ Yes, my intersection has four approaches

If not, which 3 approaches exist in the intersection?

- ○ EB, WB, and SB
- ○ EB, WB, and NB
- ◉ EB, SB, and NB
- ○ WB, SB, and NB

Is the Mainline Oriented North/South? Enter Yes or No

- ◉ Yes
- ○ No

K Factors	Mainline	**D Factors**	*Mainline*
	9.00%	Northbound (NB)	41.0%
	Side street	Southbound (SB)	59.0%
	9.00%		*Side street*
		Westbound (WB)	0.0%
		Eastbound (EB)	39.0%

Do you have FTSUTMS Model Year traffic from which you would like to interpolate/extrapolate for project years? (Y/N)

Enter Yes or No

- ◉ Yes
- ○ No

If "Yes" go to cell C47 — If "No" go to cell C31

Enter Year and Growth Rates from Base Year:

	Year	*Rate* (1.0% = 0.01) Mainline	Side Street
Base	2015	0.00%	0.00%
Opening	2025		
Mid	2035		
Design	2045		

Mainline Growth Function

- ◉ Linear
- ○ Exponential
- ○ Decaying

Side Street Growth Function

- ◉ Linear
- ○ Exponential
- ○ Decaying

Enter Base Year AADTs for Volume Comparison:

(growth rates are used to calculate other project years)

From West: EB Approach	*From East: WB Approach*	*From North: SB Approach*	*From South: NB Approach*	***TOTAL***
0	0	0	0	0

Enter Project and Model Years

	Year
Base	2015
Opening	2020
Mid	2025
Design	2030
Model	2030

Enter Base and Model Year AADTs for Volume Comparison:

(volumes for other project years are calculated by interpolation)

	From West: EB Approach	*From East: WB Approach*	*From North: SB Approach*	*From South: NB Approach*	***TOTAL***
2015	1211	0	7200	6000	14411
2030	1600	0	12000	11000	24600

First Guess Turning % Option Used
Existing Turning Movement Counts

		1st Guess Turning %'s for AADT Balancing	**Actual/Counted Traffic for 2015**
(EB LT)	*West-to-North*	97.3%	36
(EB THRU)	*West-to-East*	0.0%	0
(EB RT)	*West-to-South*	2.7%	1
(WB LT)	*East-to-South*	0.0%	0
(WB THRU)	*East-to-West*	0.0%	0
(WB RT)	*East-to-North*	0.0%	0
(SB LT)	*North-to-East*	0.0%	0
(SB THRU)	*North-to-South*	80.6%	270
(SB RT)	*North-to-West*	19.4%	65
(NB LT)	*South-to-West*	2.7%	7
(NB THRU)	*South-to-North*	97.3%	253
(NB RT)	*South-to-East*	0.0%	0

Desired Closure: 1.50

Existing Year AADTs

Only the existing year total departure volumes [AADT*K*(1-D)] will be used to calculate the turning percentages first guess.

Existing Turning Movement Counts

The turning percentages first guess is the same as the ***actual distribution of turning volumes entered***. No balancing technique is used.

FSUTMS Model Year AADTs

Only the FSUTMS model year departure volumes [AADT*K*(1-D)] will be used to calculate the turning percentages first guess.

PROJECT TRAFFIC FOR Belle Terre Blvd AT Zebulah's Tr (N) - PM

DESIGN HOUR TURNING MOVEMENTS IN YEAR 2015

Belle Terre Blvd
(7200)
382
16.1% 62 | 83.9% 320 | 0.0% 0

Zebulah's Tr (N) - PM
0 0.0%
0 0.0% 0 0
0 0.0%

(1200) 43
97.3% 42
0.0% 0
2.7% 1

Zebulah's Tr (N) - PM

5 | 216 | 0
2.2% | 97.8% | 0.0%
221
(6000)
Belle Terre Blvd

(XXXXX)	2015 AADT
XXXX	2015 DDHV
K ML =	9.00%
K SS =	9.00%

D Factors
41.0% NB
59.0% SB
39.0% EB

DESIGN HOUR TURNING MOVEMENTS IN YEAR 2020

Belle Terre Blvd
(8800)
467
14.4% 67 | 85.6% 400 | 0.0% 0

Zebulah's Tr (N) - PM
0 0.0%
0 0.0% 0 0
0 0.0%

(1300) 47
97.1% 46
0.0% 0
2.9% 1

Zebulah's Tr (N) - PM

6 | 277 | 0
2.0% | 98.0% | 0.0%
283
(7700)
Belle Terre Blvd

(XXXXX)	2020 AADT
XXXX	2020 DDHV
K ML =	9.00%
K SS =	9.00%

D Factors
41.0% NB
59.0% SB
39.0% EB

DESIGN HOUR TURNING MOVEMENTS IN YEAR 2025

Belle Terre Blvd
(10000)
552
13.1% 72 | 86.9% 480 | 0.0% 0

Zebulah's Tr (N) - PM
0 0.0%
0 0.0% 0 0
0 0.0%

(1500) 52
97.0% 50
0.0% 0
3.0% 2

Zebulah's Tr (N) - PM

7 | 337 | 0
1.9% | 98.1% | 0.0%
344
(9300)
Belle Terre Blvd

(XXXXX)	2025 AADT
XXXX	2025 DDHV
K ML =	9.00%
K SS =	9.00%

D Factors
41.0% NB
59.0% SB
39.0% EB

DESIGN HOUR TURNING MOVEMENTS IN YEAR 2030

Belle Terre Blvd
(12000)
637
12.2% 78 | 87.8% 559 | 0.0% 0

Zebulah's Tr (N) - PM
0 0.0%
0 0.0% 0 0
0 0.0%

(1600) 56
96.8% 54
0.0% 0
3.2% 2

Zebulah's Tr (N) - PM

8 | 398 | 0
1.9% | 98.1% | 0.0%
406
(11000)
Belle Terre Blvd

(XXXXX)	2030 AADT
XXXX	2030 DDHV
K ML =	9.00%
K SS =	9.00%

D Factors
41.0% NB
59.0% SB
39.0% EB

PROJECT TRAFFIC FOR Belle Terre Blvd AT Zebulah's Tr (N) - PM

2015 INPUT TMCs COMPARED TO 2015 DHV

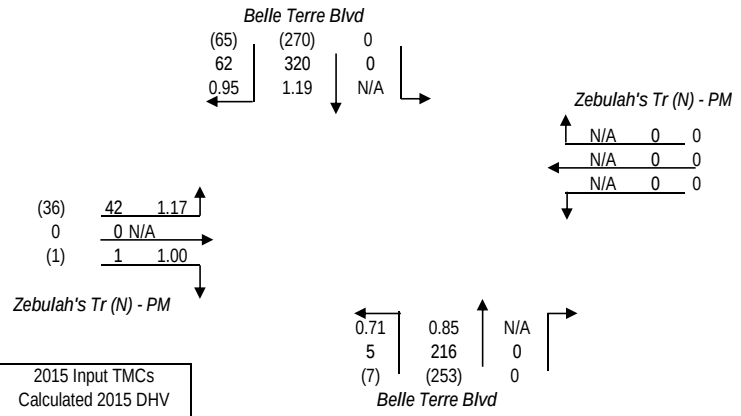

(XXX)	2015 Input TMCs
XXX	Calculated 2015 DHV
X.XX	Ratio

2015 INPUT TMCs COMPARED TO 2020 DHV

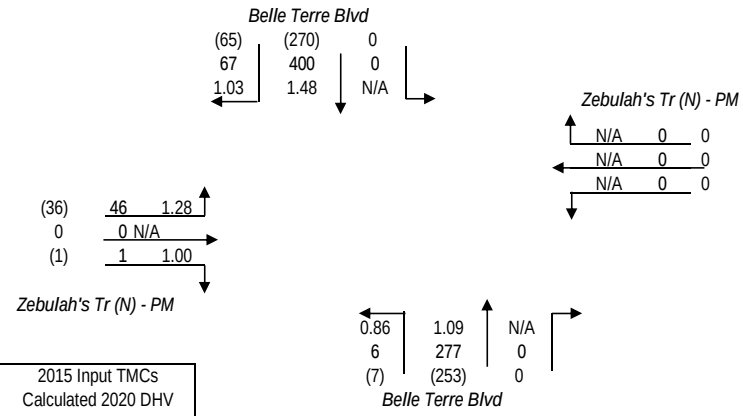

(XXX)	2015 Input TMCs
XXX	Calculated 2020 DHV
X.XX	Ratio

2015 INPUT TMCs COMPARED TO 2025 DHV

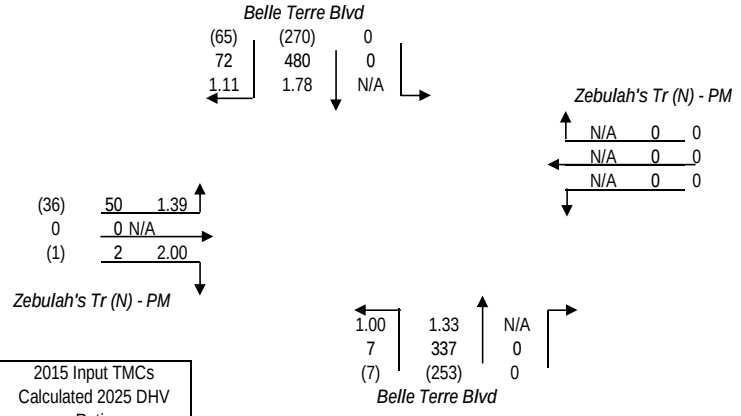

(XXX)	2015 Input TMCs
XXX	Calculated 2025 DHV
X.XX	Ratio

2015 INPUT TMCs COMPARED TO 2030 DHV

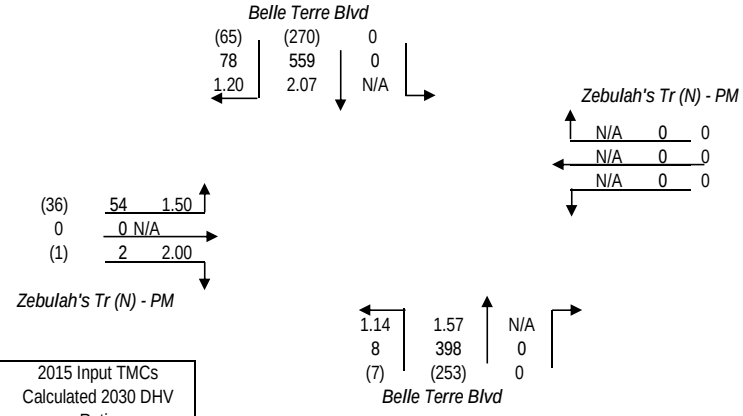

(XXX)	2015 Input TMCs
XXX	Calculated 2030 DHV
X.XX	Ratio

TURNS5 ANALYSIS SHEET - INPUT

Analyst: -
Date: 13-Nov-15
Highway: Belle Terre Blvd/Pkwy
Intersection: SR 100 - PM
Project: Belle Terre Blvd/Pkwy Intersection Analysis
County: Flagler

Is this a 4 way intersection?
- (●) Yes, my intersection has four approaches

If not, which 3 approaches exist in the intersection?
- ( ) EB, WB, and SB
- ( ) EB, WB, and NB
- ( ) EB, SB, and NB
- ( ) WB, SB, and NB

Is the Mainline Oriented North/South? Enter Yes or No
- (●) Yes
- ( ) No

K Factors	Mainline
	9.00%
	Side street
	9.00%

D Factors	*Mainline*
Northbound (NB)	41.0%
Southbound (SB)	59.0%
	Side street
Westbound (WB)	39.0%
Eastbound (EB)	61.0%

Do you have FTSUTMS Model Year traffic from which you would like to interpolate/extrapolate for project years? (Y/N)

Enter Yes or No
- (●) Yes
- ( ) No

If "Yes" go to cell C47 — If "No" go to cell C31

Enter Year and Growth Rates from Base Year:

	Year	*Rate* (1.0% = 0.01) **Mainline**	**Side Street**
Base	2015	0.00%	0.00%
Opening	2025		
Mid	2035		
Design	2045		

Mainline Growth Function
- (●) Linear
- ( ) Exponential
- ( ) Decaying

Side Street Growth Function
- (●) Linear
- ( ) Exponential
- ( ) Decaying

Enter Base Year AADTs for Volume Comparison:
(growth rates are used to calculate other project years)

From West: EB Approach	*From East: WB Approach*	*From North: SB Approach*	*From South: NB Approach*	***TOTAL***
0	0	0	0	0

Enter Project and Model Years

	Year
Base	2015
Opening	2020
Mid	2025
Design	2030
Model	2030

Enter Base and Model Year AADTs for Volume Comparison:
(volumes for other project years are calculated by interpolation)

	From West: EB Approach	*From East: WB Approach*	*From North: SB Approach*	*From South: NB Approach*	***TOTAL***
2015	13900	19600	24000	7200	64700
2030	17000	24000	30500	12000	83500

First Guess Turning % Option Used
Existing Turning Movement Counts

		1st Guess Turning %'s for AADT Balancing	**Actual/Counted Traffic for 2015**
(EB LT)	*West-to-North*	38.7%	353
(EB THRU)	*West-to-East*	53.7%	491
(EB RT)	*West-to-South*	7.6%	69
(WB LT)	*East-to-South*	13.2%	152
(WB THRU)	*East-to-West*	43.9%	504
(WB RT)	*East-to-North*	42.9%	492
(SB LT)	*North-to-East*	51.7%	356
(SB THRU)	*North-to-South*	16.6%	114
(SB RT)	*North-to-West*	31.7%	218
(NB LT)	*South-to-West*	12.8%	37
(NB THRU)	*South-to-North*	62.3%	180
(NB RT)	*South-to-East*	24.9%	72

Desired Closure: 1.00

Existing Year AADTs — Only the existing year total departure volumes [AADT*K*(1-D)] will be used to calculate the turning percentages first guess.

Existing Turning Movement Counts — The turning percentages first guess is the same as the ***actual distribution of turning volumes entered***. No balancing technique is used.

FSUTMS Model Year AADTs — Only the FSUTMS model year departure volumes [AADT*K*(1-D)] will be used to calculate the turning percentages first guess.

PROJECT TRAFFIC FOR Belle Terre Blvd/Pkwy AT SR 100 - PM

DESIGN HOUR TURNING MOVEMENTS IN YEAR 2015

Belle Terre Blvd/Pkwy

(24000)

1274

23.3% 297 | 19.9% 253 | 56.8% 724

SR 100 - PM

387 56.3%
203 29.4% 688 (20000)
98 14.3%

(14000) 763
45.1% 344
47.6% 363
7.3% 56

SR 100 - PM

20 7.4% | 189 71.0% | 57 21.6%

266

(7200)

Belle Terre Blvd/Pkwy

(XXXXX)	2015 AADT
XXXX	2015 DDHV
K ML =	9.00%
K SS =	9.00%

D Factors
41.0% NB
59.0% SB
39.0% WB
61.0% EB

DESIGN HOUR TURNING MOVEMENTS IN YEAR 2020

Belle Terre Blvd/Pkwy

(26000)

1389

22.8% 317 | 22.1% 307 | 55.1% 765

SR 100 - PM

406 54.9%
213 28.9% 739 (21000)
120 16.2%

(15000) 820
44.4% 364
47.2% 387
8.4% 69

SR 100 - PM

24 7.5% | 230 70.8% | 71 21.7%

325

(8800)

Belle Terre Blvd/Pkwy

(XXXXX)	2020 AADT
XXXX	2020 DDHV
K ML =	9.00%
K SS =	9.00%

D Factors
41.0% NB
59.0% SB
39.0% WB
61.0% EB

DESIGN HOUR TURNING MOVEMENTS IN YEAR 2025

Belle Terre Blvd/Pkwy

(28000)

1504

22.3% 335 | 24.0% 361 | 53.7% 808

SR 100 - PM

424 53.6%
227 28.7% 791 (23000)
140 17.7%

(16000) 877
43.8% 384
47.0% 412
9.2% 81

SR 100 - PM

29 7.6% | 271 70.6% | 84 21.8%

384

(10000)

Belle Terre Blvd/Pkwy

(XXXXX)	2025 AADT
XXXX	2025 DDHV
K ML =	9.00%
K SS =	9.00%

D Factors
41.0% NB
59.0% SB
39.0% WB
61.0% EB

DESIGN HOUR TURNING MOVEMENTS IN YEAR 2030

Belle Terre Blvd/Pkwy

(31000)

1620

21.9% 355 | 25.6% 414 | 52.5% 851

SR 100 - PM

443 52.6%
238 28.3% 842 (24000)
161 19.1%

(17000) 933
43.4% 405
46.6% 435
10.0% 93

SR 100 - PM

34 7.6% | 312 70.6% | 97 21.8%

443

(12000)

Belle Terre Blvd/Pkwy

(XXXXX)	2030 AADT
XXXX	2030 DDHV
K ML =	9.00%
K SS =	9.00%

D Factors
41.0% NB
59.0% SB
39.0% WB
61.0% EB

PROJECT TRAFFIC FOR Belle Terre Blvd/Pkwy AT SR 100 - PM

2015 INPUT TMCs COMPARED TO 2015 DHV

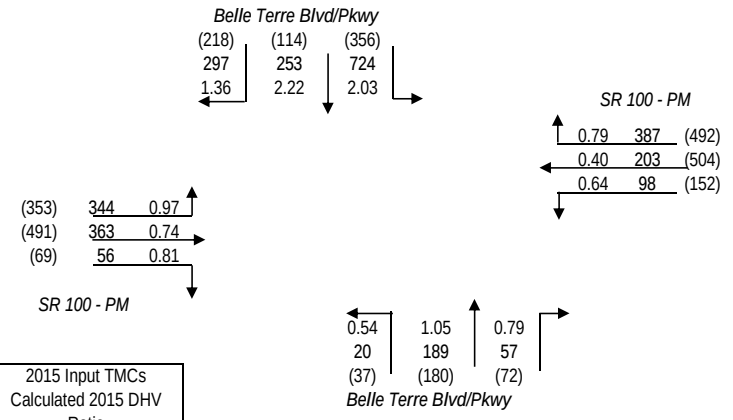

2015 INPUT TMCs COMPARED TO 2020 DHV

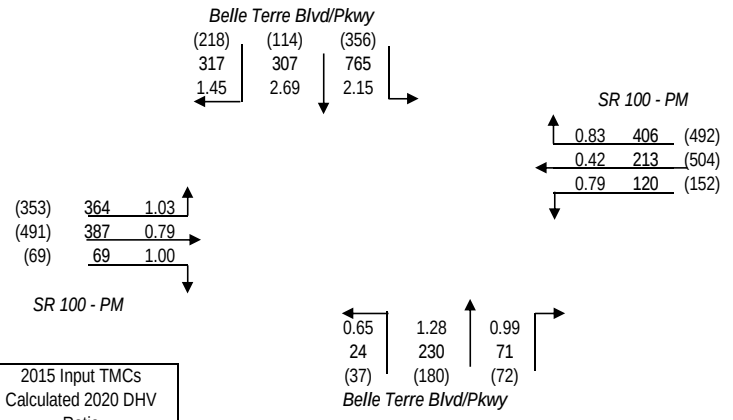

2015 INPUT TMCs COMPARED TO 2025 DHV

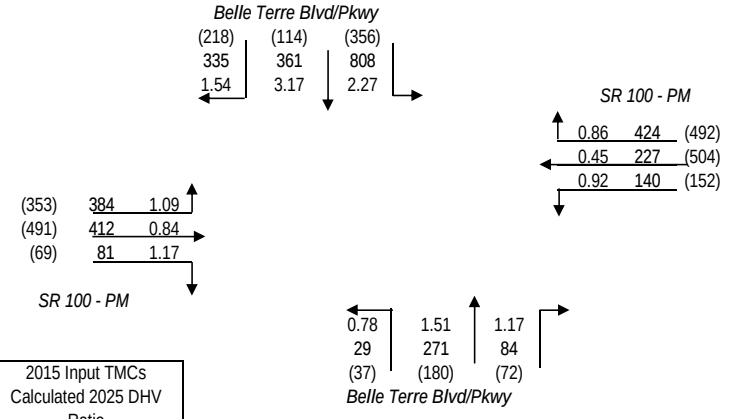

2015 INPUT TMCs COMPARED TO 2030 DHV

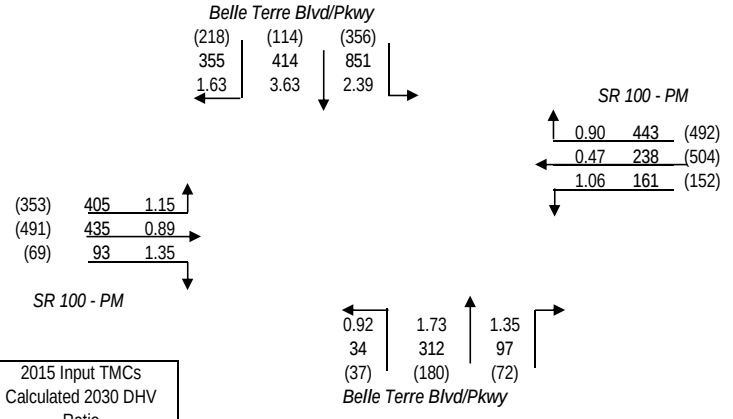

TURNS5 ANALYSIS SHEET - INPUT

Analyst:	-
Date:	13-Nov-15
Highway:	Belle Terre Pkwy
Intersection:	Eastwood Dr - PM
Project:	Belle Terre Blvd/Pkwy Intersection Analysis
County:	Flagler

Is this a 4 way intersection?

- ○ Yes, my intersection has four approaches

If not, which 3 approaches exist in the intersection?

- ○ EB, WB, and SB
- ○ EB, WB, and NB
- ◉ EB, SB, and NB
- ○ WB, SB, and NB

Is the Mainline Oriented North/South? (Enter Yes or No)

- ◉ Yes
- ○ No

K Factors	Mainline	**D Factors**	*Mainline*
	9.00%	Northbound (NB)	59.0%
	Side street	Southbound (SB)	41.0%
	9.00%		*Side street*
		Westbound (WB)	0.0%
		Eastbound (EB)	39.0%

Do you have FTSUTMS Model Year traffic from which you would like to interpolate/extrapolate for project years? (Y/N) (Enter Yes or No)

- ◉ Yes
- ○ No

If "Yes" go to cell C47 If "No" go to cell C31

Enter Year and Growth Rates from Base Year:

	Year	*Rate* (1.0% = 0.01) Mainline	Side Street
Base	2015	0.00%	0.00%
Opening	2025		
Mid	2035		
Design	2045		

Mainline Growth Function

- ◉ Linear
- ○ Exponential
- ○ Decaying

Side Street Growth Function

- ◉ Linear
- ○ Exponential
- ○ Decaying

Enter Base Year AADTs for Volume Comparison:
(growth rates are used to calculate other project years)

From West: EB Approach	*From East: WB Approach*	*From North: SB Approach*	*From South: NB Approach*	***TOTAL***
0	0	0	0	0

Enter Project and Model Years

	Year
Base	2015
Opening	2020
Mid	2025
Design	2030
Model	2030

Enter Base and Model Year AADTs for Volume Comparison:
(volumes for other project years are calculated by interpolation)

	From West: EB Approach	*From East: WB Approach*	*From North: SB Approach*	*From South: NB Approach*	***TOTAL***
2015	767	0	24000	24000	48767
2030	990	0	31000	30500	62490

		1st Guess Turning %'s for AADT Balancing	**Actual/Counted Traffic for 2015**
(EB LT)	*West-to-North*	26.9%	7
(EB THRU)	*West-to-East*	0.0%	0
(EB RT)	*West-to-South*	73.1%	19
(WB LT)	*East-to-South*	0.0%	0
(WB THRU)	*East-to-West*	0.0%	0
(WB RT)	*East-to-North*	0.0%	0
(SB LT)	*North-to-East*	0.0%	0
(SB THRU)	*North-to-South*	98.8%	883
(SB RT)	*North-to-West*	1.2%	11
(NB LT)	*South-to-West*	2.7%	32
(NB THRU)	*South-to-North*	97.3%	1138
(NB RT)	*South-to-East*	0.0%	0

Desired Closure: 1.00

Existing Year AADTs

Existing Turning Movement Counts

FSUTMS Model Year AADTs

First Guess Turning % Option Used
Existing Turning Movement Counts

Only the existing year total departure volumes [AADT*K*(1-D)] will be used to calculate the turning percentages first guess.

The turning percentages first guess is the same as the ***actual distribution of turning volumes entered***. No balancing technique is used.

Only the FSUTMS model year departure volumes [AADT*K*(1-D)] will be used to calculate the turning percentages first guess.

PROJECT TRAFFIC FOR Belle Terre Pkwy AT Eastwood Dr - PM

DESIGN HOUR TURNING MOVEMENTS IN YEAR 2015

Belle Terre Pkwy
(24000)
886
1.1% 10 | 98.9% 876 | 0.0% 0

Eastwood Dr - PM
0 0.0%
0 0.0% 0 0
0 0.0%

(770) 27
27.5% 7
0.0% 0
72.5% 20

Eastwood Dr - PM

32 | 1242 | 0
2.5% | 97.5% | 0.0%
1274
(24000)
Belle Terre Pkwy

(XXXXX)	2015 AADT	
XXXX	2015 DDHV	
K ML =	9.00%	
K SS =	9.00%	

D Factors
59.0% NB
41.0% SB
39.0% EB

DESIGN HOUR TURNING MOVEMENTS IN YEAR 2020

Belle Terre Pkwy
(26000)
972
1.1% 11 | 98.9% 961 | 0.0% 0

Eastwood Dr - PM
0 0.0%
0 0.0% 0 0
0 0.0%

(840) 30
27.8% 8
0.0% 0
72.2% 22

Eastwood Dr - PM

35 | 1354 | 0
2.5% | 97.5% | 0.0%
1389
(26000)
Belle Terre Pkwy

(XXXXX)	2020 AADT	
XXXX	2020 DDHV	
K ML =	9.00%	
K SS =	9.00%	

D Factors
59.0% NB
41.0% SB
39.0% EB

DESIGN HOUR TURNING MOVEMENTS IN YEAR 2025

Belle Terre Pkwy
(29000)
1058
1.2% 13 | 98.8% 1045 | 0.0% 0

Eastwood Dr - PM
0 0.0%
0 0.0% 0 0
0 0.0%

(920) 32
28.0% 9
0.0% 0
72.0% 23

Eastwood Dr - PM

38 | 1466 | 0
2.5% | 97.5% | 0.0%
1504
(28000)
Belle Terre Pkwy

(XXXXX)	2025 AADT	
XXXX	2025 DDHV	
K ML =	9.00%	
K SS =	9.00%	

D Factors
59.0% NB
41.0% SB
39.0% EB

DESIGN HOUR TURNING MOVEMENTS IN YEAR 2030

Belle Terre Pkwy
(31000)
1144
1.1% 13 | 98.9% 1131 | 0.0% 0

Eastwood Dr - PM
0 0.0%
0 0.0% 0 0
0 0.0%

(990) 35
27.9% 10
0.0% 0
72.1% 25

Eastwood Dr - PM

41 | 1579 | 0
2.5% | 97.5% | 0.0%
1620
(31000)
Belle Terre Pkwy

(XXXXX)	2030 AADT	
XXXX	2030 DDHV	
K ML =	9.00%	
K SS =	9.00%	

D Factors
59.0% NB
41.0% SB
39.0% EB

PROJECT TRAFFIC FOR Belle Terre Pkwy AT Eastwood Dr - PM

2015 INPUT TMCs COMPARED TO 2015 DHV

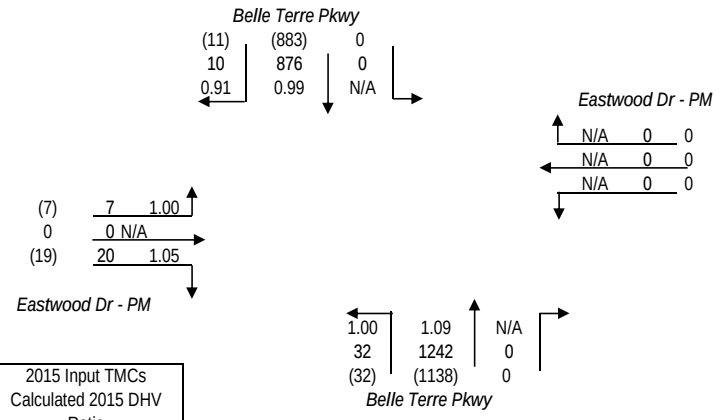

2015 INPUT TMCs COMPARED TO 2020 DHV

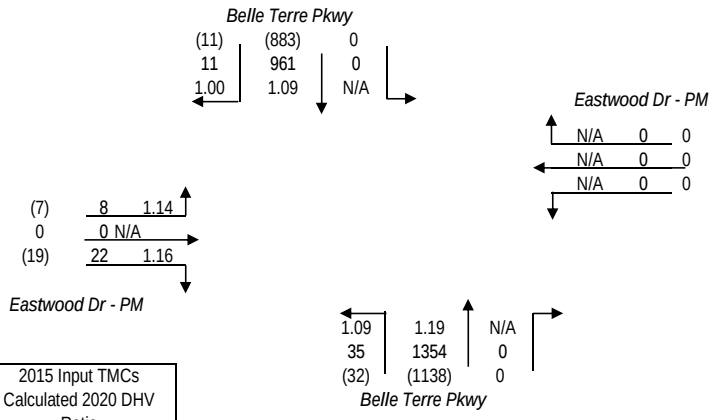

2015 INPUT TMCs COMPARED TO 2025 DHV

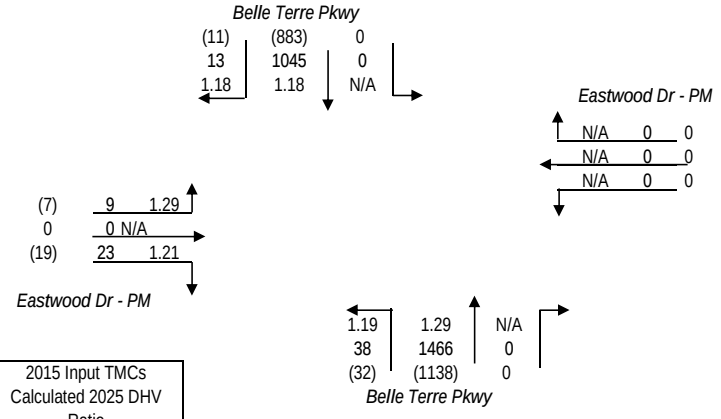

2015 INPUT TMCs COMPARED TO 2030 DHV

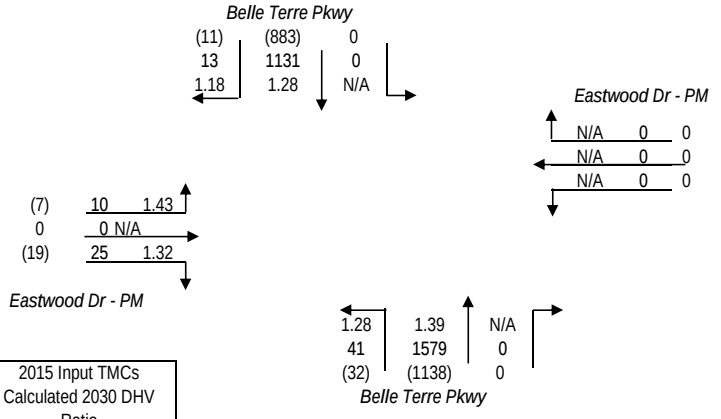

TURNS5 ANALYSIS SHEET - INPUT

Analyst:	-
Date:	13-Nov-15
Highway:	Belle Terre Pkwy
Intersection:	Eastwood Dr/Market Ave - PM
Project:	Belle Terre Blvd/Pkwy Intersection Analysis
County:	Flagler

Is this a 4 way intersection?

- (●) Yes, my intersection has four approaches

If not, which 3 approaches exist in the intersection?

- ( ) EB, WB, and SB
- ( ) EB, WB, and NB
- ( ) EB, SB, and NB
- ( ) WB, SB, and NB

Is the Mainline Oriented North/South? Enter Yes or No: (●) Yes ( ) No

K Factors	Mainline	**D Factors**	*Mainline*
	9.00%	Northbound (NB)	59.0%
	Side street	Southbound (SB)	41.0%
	9.00%		*Side street*
		Westbound (WB)	61.0%
		Eastbound (EB)	39.0%

Do you have FTSUTMS Model Year traffic from which you would like to interpolate/extrapolate for project years? (Y/N)

Enter Yes or No: (●) Yes ( ) No

If "Yes" go to cell C47 — If "No" go to cell C31

Enter Year and Growth Rates from Base Year:

	Year	*Rate* (1.0% = 0.01) Mainline	Side Street
Base	2015	0.00%	0.00%
Opening	2025		
Mid	2035		
Design	2045		

Mainline Growth Function: (●) Linear ( ) Exponential ( ) Decaying

Side Street Growth Function: (●) Linear ( ) Exponential ( ) Decaying

Enter Base Year AADTs for Volume Comparison:
(growth rates are used to calculate other project years)

From West: EB Approach	*From East: WB Approach*	*From North: SB Approach*	*From South: NB Approach*	***TOTAL***
0	0	0	0	0

Enter Project and Model Years

	Year
Base	2015
Opening	2020
Mid	2025
Design	2030
Model	2030

Enter Base and Model Year AADTs for Volume Comparison:
(volumes for other project years are calculated by interpolation)

	From West: EB Approach	*From East: WB Approach*	*From North: SB Approach*	*From South: NB Approach*	***TOTAL***
2015	478	1622	24000	24000	50100
2030	610	2100	31000	31000	64710

First Guess Turning % Option Used
Existing Turning Movement Counts

		1st Guess Turning %'s for AADT Balancing	**Actual/Counted Traffic for 2015**
(EB LT)	*West-to-North*	88.9%	16
(EB THRU)	*West-to-East*	0.0%	0
(EB RT)	*West-to-South*	11.1%	2
(WB LT)	*East-to-South*	70.8%	63
(WB THRU)	*East-to-West*	3.4%	3
(WB RT)	*East-to-North*	25.8%	23
(SB LT)	*North-to-East*	1.3%	11
(SB THRU)	*North-to-South*	96.1%	829
(SB RT)	*North-to-West*	2.6%	22
(NB LT)	*South-to-West*	0.0%	0
(NB THRU)	*South-to-North*	96.0%	1099
(NB RT)	*South-to-East*	4.0%	46

Desired Closure: 1.00

Existing Year AADTs — Only the existing year total departure volumes [AADT*K*(1-D)] will be used to calculate the turning percentages first guess.

Existing Turning Movement Counts — The turning percentages first guess is the same as the ***actual distribution of turning volumes entered***. No balancing technique is used.

FSUTMS Model Year AADTs — Only the FSUTMS model year departure volumes [AADT*K*(1-D)] will be used to calculate the turning percentages first guess.

PROJECT TRAFFIC FOR Belle Terre Pkwy AT Eastwood Dr/Market Ave - PM

DESIGN HOUR TURNING MOVEMENTS IN YEAR 2015

Belle Terre Pkwy
(24000)
886
2.7% 24 | 96.1% 851 | 1.2% 11

Eastwood Dr/Market Ave - PM
24 26.6%
3 3.5% 89 (1600)
62 69.9%

(480) 17
89.3% 15
0.0% 0
10.7% 2

Eastwood Dr/Market Ave - PM

0 0.0% | 1227 96.3% | 47 3.7%
1274
(24000)
Belle Terre Pkwy

(XXXXX)	2015 AADT
XXXX	2015 DDHV
K ML =	9.00%
K SS =	9.00%

D Factors
59.0% NB
41.0% SB
61.0% WB
39.0% EB

DESIGN HOUR TURNING MOVEMENTS IN YEAR 2020

Belle Terre Pkwy
(26000)
972
2.7% 26 | 96.1% 934 | 1.2% 12

Eastwood Dr/Market Ave - PM
26 26.6%
3 3.5% 98 (1800)
69 69.9%

(520) 18
89.3% 16
0.0% 0
10.7% 2

Eastwood Dr/Market Ave - PM

0 0.0% | 1346 96.3% | 52 3.7%
1398
(26000)
Belle Terre Pkwy

(XXXXX)	2020 AADT
XXXX	2020 DDHV
K ML =	9.00%
K SS =	9.00%

D Factors
59.0% NB
41.0% SB
61.0% WB
39.0% EB

DESIGN HOUR TURNING MOVEMENTS IN YEAR 2025

Belle Terre Pkwy
(29000)
1058
2.7% 29 | 96.1% 1016 | 1.2% 13

Eastwood Dr/Market Ave - PM
28 26.6%
4 3.5% 107 (1900)
75 69.9%

(570) 20
89.3% 18
0.0% 0
10.7% 2

Eastwood Dr/Market Ave - PM

0 0.0% | 1467 96.4% | 55 3.6%
1522
(29000)
Belle Terre Pkwy

(XXXXX)	2025 AADT
XXXX	2025 DDHV
K ML =	9.00%
K SS =	9.00%

D Factors
59.0% NB
41.0% SB
61.0% WB
39.0% EB

DESIGN HOUR TURNING MOVEMENTS IN YEAR 2030

Belle Terre Pkwy
(31000)
1144
2.6% 30 | 96.2% 1100 | 1.2% 14

Eastwood Dr/Market Ave - PM
31 26.6%
3 3.4% 115 (2100)
81 70.0%

(610) 21
89.3% 19
0.0% 0
10.7% 2

Eastwood Dr/Market Ave - PM

0 0.0% | 1585 96.3% | 61 3.7%
1646
(31000)
Belle Terre Pkwy

(XXXXX)	2030 AADT
XXXX	2030 DDHV
K ML =	9.00%
K SS =	9.00%

D Factors
59.0% NB
41.0% SB
61.0% WB
39.0% EB

PROJECT TRAFFIC FOR Belle Terre Pkwy AT Eastwood Dr/Market Ave - PM

2015 INPUT TMCs COMPARED TO 2015 DHV

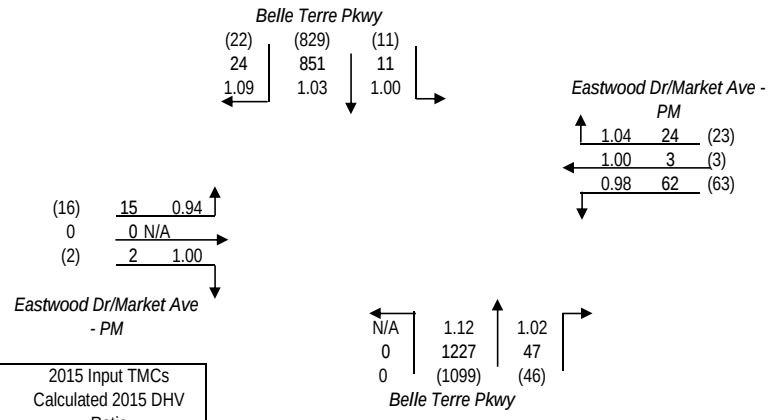

(XXX)	2015 Input TMCs
XXX	Calculated 2015 DHV
X.XX	Ratio

2015 INPUT TMCs COMPARED TO 2020 DHV

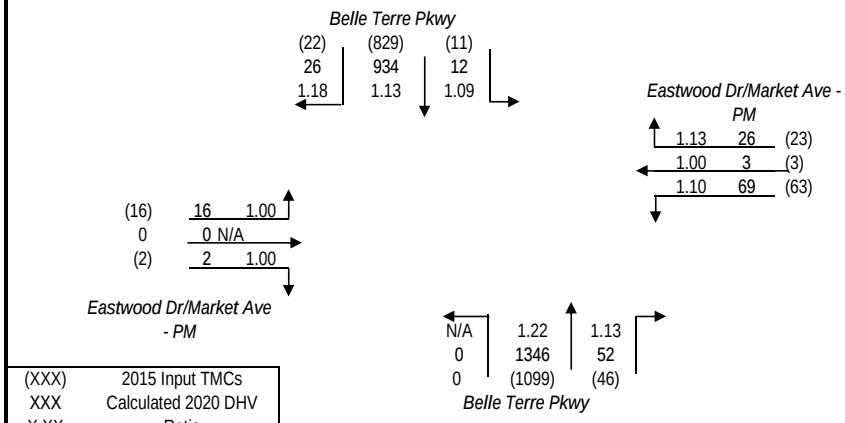

(XXX)	2015 Input TMCs
XXX	Calculated 2020 DHV
X.XX	Ratio

2015 INPUT TMCs COMPARED TO 2025 DHV

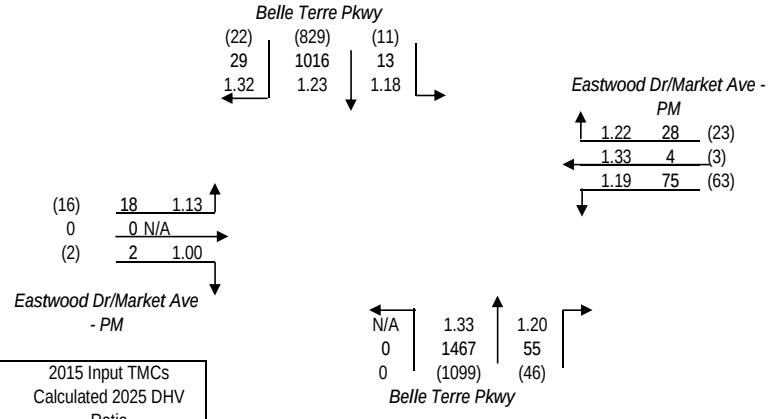

(XXX)	2015 Input TMCs
XXX	Calculated 2025 DHV
X.XX	Ratio

2015 INPUT TMCs COMPARED TO 2030 DHV

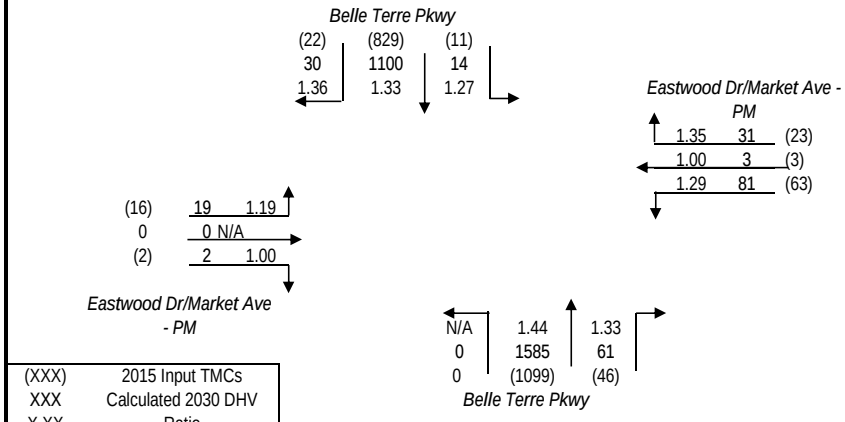

(XXX)	2015 Input TMCs
XXX	Calculated 2030 DHV
X.XX	Ratio

TURNS5 ANALYSIS SHEET - INPUT

Analyst:	-
Date:	13-Nov-15
Highway:	Belle Terre Pkwy
Intersection:	Easthampton Blvd/Central Ave - PM
Project:	Belle Terre Blvd/Pkwy Intersection Analysis
County:	Flagler

Is this a 4 way intersection?

- (●) Yes, my intersection has four approaches

If not, which 3 approaches exist in the intersection?

- ( ) EB, WB, and SB
- ( ) EB, WB, and NB
- ( ) EB, SB, and NB
- ( ) WB, SB, and NB

Is the Mainline Oriented North/South? Enter Yes or No

- (●) Yes
- ( ) No

K Factors	
Mainline	9.00%
Side street	9.00%

D Factors	*Mainline*
Northbound (NB)	59.0%
Southbound (SB)	41.0%
	Side street
Westbound (WB)	39.0%
Eastbound (EB)	61.0%

Do you have FTSUTMS Model Year traffic from which you would like to interpolate/extrapolate for project years? (Y/N)

Enter Yes or No

- (●) Yes
- ( ) No

If "Yes" go to cell C47 — If "No" go to cell C31

Enter Year and Growth Rates from Base Year:

	Year	*Rate* (1.0% = 0.01) Mainline	Side Street
Base	2015	0.00%	0.00%
Opening	2025		
Mid	2035		
Design	2045		

Mainline Growth Function

- (●) Linear
- ( ) Exponential
- ( ) Decaying

Side Street Growth Function

- (●) Linear
- ( ) Exponential
- ( ) Decaying

Enter Base Year AADTs for Volume Comparison:

(growth rates are used to calculate other project years)

From West: EB Approach	*From East: WB Approach*	*From North: SB Approach*	*From South: NB Approach*	***TOTAL***
0	0	0	0	0

Enter Project and Model Years

	Year
Base	2015
Opening	2020
Mid	2025
Design	2030
Model	2030

Enter Base and Model Year AADTs for Volume Comparison:

(volumes for other project years are calculated by interpolation)

	From West: EB Approach	*From East: WB Approach*	*From North: SB Approach*	*From South: NB Approach*	***TOTAL***
2015	5500	5800	27000	24000	62300
2030	8600	9000	35000	31000	83600

First Guess Turning % Option Used
Existing Turning Movement Counts

		1st Guess Turning %'s for AADT Balancing	**Actual/Counted Traffic for 2015**
(EB LT)	*West-to-North*	40.5%	100
(EB THRU)	*West-to-East*	14.2%	35
(EB RT)	*West-to-South*	45.3%	112
(WB LT)	*East-to-South*	12.2%	40
(WB THRU)	*East-to-West*	17.5%	57
(WB RT)	*East-to-North*	70.3%	230
(SB LT)	*North-to-East*	16.3%	167
(SB THRU)	*North-to-South*	69.3%	710
(SB RT)	*North-to-West*	14.4%	147
(NB LT)	*South-to-West*	14.2%	162
(NB THRU)	*South-to-North*	85.1%	968
(NB RT)	*South-to-East*	0.7%	8

Desired Closure: 1.00

Existing Year AADTs

Only the existing year total departure volumes [AADT*K*(1-D)] will be used to calculate the turning percentages first guess.

Existing Turning Movement Counts

The turning percentages first guess is the same as the ***actual distribution of turning volumes entered***. No balancing technique is used.

FSUTMS Model Year AADTs

Only the FSUTMS model year departure volumes [AADT*K*(1-D)] will be used to calculate the turning percentages first guess.

PROJECT TRAFFIC FOR Belle Terre Pkwy AT Easthampton Blvd/Central Ave - PM

DESIGN HOUR TURNING MOVEMENTS IN YEAR 2015

Belle Terre Pkwy
(27000)
996

7.4% 74 | 69.3% 690 | 23.3% 232

Easthampton Blvd/Central Ave - PM
157 77.2%
20 9.7% 204 (5800)
27 13.1%

38.7% 117
(5500) 302 18.9% 57
42.4% 128

Easthampton Blvd/Central Ave - PM

98 7.7% | 1163 91.3% | 13 1.0%
1274
(24000)
Belle Terre Pkwy

(XXXXX)	2015 AADT	
XXXX	2015 DDHV	
K ML =	9.00%	
K SS =	9.00%	

D Factors
59.0% NB
41.0% SB
39.0% WB
61.0% EB

DESIGN HOUR TURNING MOVEMENTS IN YEAR 2020

Belle Terre Pkwy
(30000)
1095

7.9% 87 | 67.6% 740 | 24.5% 268

Easthampton Blvd/Central Ave - PM
185 76.6%
25 10.4% 241 (6900)
31 13.0%

38.2% 137
(6500) 359 20.1% 72
41.7% 150

Easthampton Blvd/Central Ave - PM

116 8.3% | 1267 90.6% | 15 1.1%
1398
(26000)
Belle Terre Pkwy

(XXXXX)	2020 AADT	
XXXX	2020 DDHV	
K ML =	9.00%	
K SS =	9.00%	

D Factors
59.0% NB
41.0% SB
39.0% WB
61.0% EB

DESIGN HOUR TURNING MOVEMENTS IN YEAR 2025

Belle Terre Pkwy
(32000)
1193

7.9% 94 | 66.5% 794 | 25.6% 305

Easthampton Blvd/Central Ave - PM
209 75.1%
31 11.2% 278 (7900)
38 13.7%

36.0% 149
(7600) 415 21.8% 91
42.2% 175

Easthampton Blvd/Central Ave - PM

137 9.0% | 1365 89.7% | 20 1.3%
1522
(29000)
Belle Terre Pkwy

(XXXXX)	2025 AADT	
XXXX	2025 DDHV	
K ML =	9.00%	
K SS =	9.00%	

D Factors
59.0% NB
41.0% SB
39.0% WB
61.0% EB

DESIGN HOUR TURNING MOVEMENTS IN YEAR 2030

Belle Terre Pkwy
(35000)
1292

7.2% 93 | 66.2% 855 | 26.6% 344

Easthampton Blvd/Central Ave - PM
227 71.8%
38 12.1% 316 (9000)
51 16.1%

31.0% 146
(8600) 472 24.1% 114
44.9% 212

Easthampton Blvd/Central Ave - PM

165 10.0% | 1455 88.4% | 26 1.6%
1646
(31000)
Belle Terre Pkwy

(XXXXX)	2030 AADT	
XXXX	2030 DDHV	
K ML =	9.00%	
K SS =	9.00%	

D Factors
59.0% NB
41.0% SB
39.0% WB
61.0% EB

PROJECT TRAFFIC FOR Belle Terre Pkwy AT Easthampton Blvd/Central Ave - PM

2015 INPUT TMCs COMPARED TO 2015 DHV

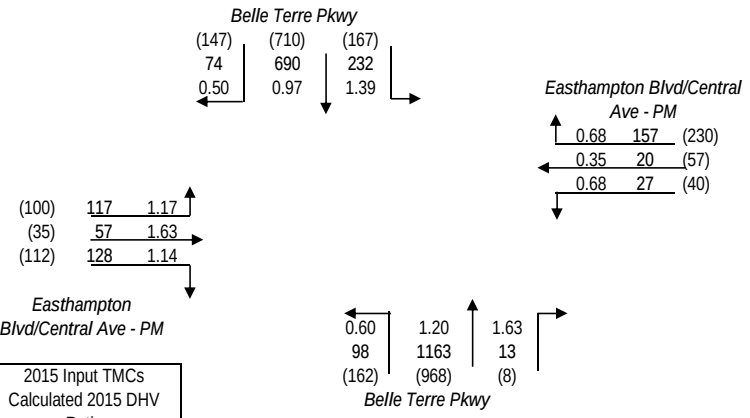

(XXX)	2015 Input TMCs
XXX	Calculated 2015 DHV
X.XX	Ratio

2015 INPUT TMCs COMPARED TO 2020 DHV

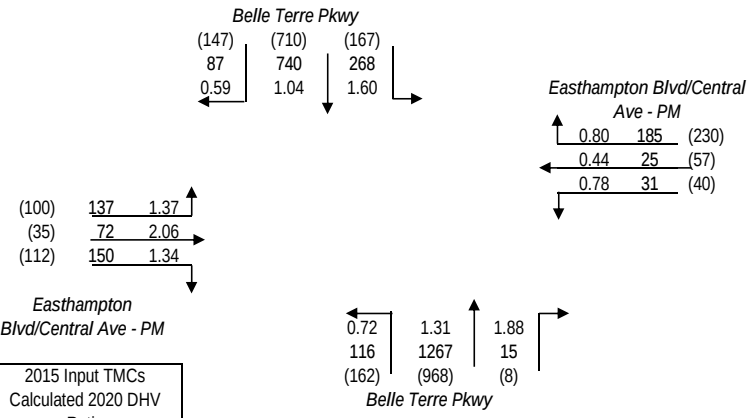

(XXX)	2015 Input TMCs
XXX	Calculated 2020 DHV
X.XX	Ratio

2015 INPUT TMCs COMPARED TO 2025 DHV

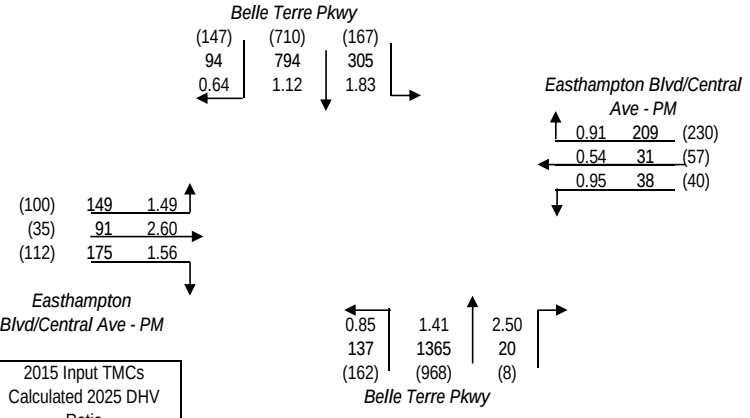

(XXX)	2015 Input TMCs
XXX	Calculated 2025 DHV
X.XX	Ratio

2015 INPUT TMCs COMPARED TO 2030 DHV

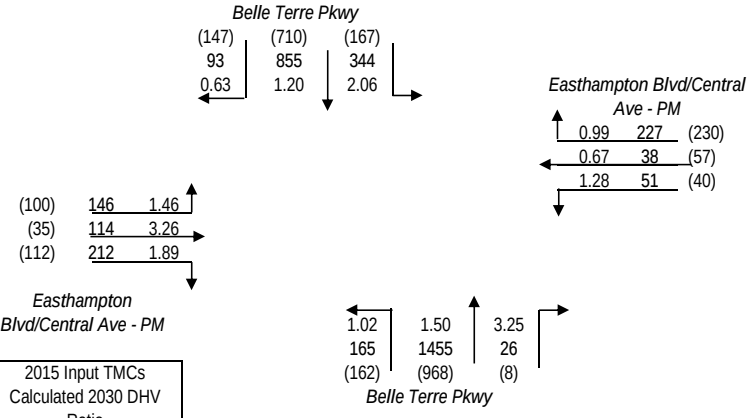

(XXX)	2015 Input TMCs
XXX	Calculated 2030 DHV
X.XX	Ratio

TURNS5 ANALYSIS SHEET - INPUT

Analyst: -
Date: 13-Nov-15
Highway: Belle Terre Pkwy
Intersection: Royal Palms Pkwy - PM
Project: Belle Terre Blvd/Pkwy Intersection Analysis
County: Flagler

Is this a 4 way intersection?
- (●) Yes, my intersection has four approaches

If not, which 3 approaches exist in the intersection?
- ( ) EB, WB, and SB
- ( ) EB, WB, and NB
- ( ) EB, SB, and NB
- ( ) WB, SB, and NB

Is the Mainline Oriented North/South? Enter Yes or No
- (●) Yes
- ( ) No

K Factors	Mainline
	9.00%
	Side street
	9.00%

D Factors	*Mainline*
Northbound (NB)	59.0%
Southbound (SB)	41.0%
	Side street
Westbound (WB)	39.0%
Eastbound (EB)	61.0%

Do you have FTSUTMS Model Year traffic from which you would like to interpolate/extrapolate for project years? (Y/N)

Enter Yes or No
- (●) Yes
- ( ) No

If "Yes" go to cell C47 — If "No" go to cell C31

Enter Year and Growth Rates from Base Year:

	Year	*Rate* (1.0% = 0.01) **Mainline**	**Side Street**
Base	2015	0.00%	0.00%
Opening	2025		
Mid	2035		
Design	2045		

Mainline Growth Function
- (●) Linear
- ( ) Exponential
- ( ) Decaying

Side Street Growth Function
- (●) Linear
- ( ) Exponential
- ( ) Decaying

Enter Base Year AADTs for Volume Comparison:
(growth rates are used to calculate other project years)

From West: EB Approach	*From East: WB Approach*	*From North: SB Approach*	*From South: NB Approach*	***TOTAL***
0	0	0	0	0

Enter Project and Model Years

	Year
Base	2015
Opening	2020
Mid	2025
Design	2030
Model	2030

Enter Base and Model Year AADTs for Volume Comparison:
(volumes for other project years are calculated by interpolation)

	From West: EB Approach	*From East: WB Approach*	*From North: SB Approach*	*From South: NB Approach*	***TOTAL***
2015	4500	5400	26000	27000	62900
2030	8700	16000	36000	35000	95700

First Guess Turning % Option Used
Existing Turning Movement Counts

		1st Guess Turning %'s for AADT Balancing	**Actual/Counted Traffic for 2015**
(EB LT)	*West-to-North*	14.7%	41
(EB THRU)	*West-to-East*	31.7%	88
(EB RT)	*West-to-South*	53.6%	149
(WB LT)	*East-to-South*	15.6%	74
(WB THRU)	*East-to-West*	22.3%	106
(WB RT)	*East-to-North*	62.1%	295
(SB LT)	*North-to-East*	15.3%	151
(SB THRU)	*North-to-South*	81.1%	801
(SB RT)	*North-to-West*	3.6%	36
(NB LT)	*South-to-West*	10.9%	141
(NB THRU)	*South-to-North*	83.8%	1088
(NB RT)	*South-to-East*	5.3%	69

Desired Closure: 1.50

Existing Year AADTs — Only the existing year total departure volumes [AADT*K*(1-D)] will be used to calculate the turning percentages first guess.

Existing Turning Movement Counts — The turning percentages first guess is the same as the ***actual distribution of turning volumes entered***. No balancing technique is used.

FSUTMS Model Year AADTs — Only the FSUTMS model year departure volumes [AADT*K*(1-D)] will be used to calculate the turning percentages first guess.

PROJECT TRAFFIC FOR Belle Terre Pkwy AT Royal Palms Pkwy - PM

DESIGN HOUR TURNING MOVEMENTS IN YEAR 2015

Belle Terre Pkwy
(26000)
959
2.4% 23 | 83.1% 797 | 14.5% 139

Royal Palms Pkwy - PM
127 66.6%
30 16.0% 190 (5400)
33 17.4%

(4500) 247
14.5% 36
30.3% 75
55.2% 136

Royal Palms Pkwy - PM

108 7.5% | 1250 87.2% | 76 5.3%
1434
(27000)
Belle Terre Pkwy

(XXXXX)	2015 AADT
XXXX	2015 DDHV
K ML =	9.00%
K SS =	9.00%

D Factors
59.0% NB
41.0% SB
39.0% WB
61.0% EB

DESIGN HOUR TURNING MOVEMENTS IN YEAR 2020

Belle Terre Pkwy
(29000)
1082
2.5% 27 | 77.1% 834 | 20.4% 221

Royal Palms Pkwy - PM
207 65.9%
55 17.6% 314 (8900)
52 16.5%

(5900) 324
13.1% 42
39.3% 128
47.6% 154

Royal Palms Pkwy - PM

128 8.1% | 1329 84.4% | 118 7.5%
1575
(30000)
Belle Terre Pkwy

(XXXXX)	2020 AADT
XXXX	2020 DDHV
K ML =	9.00%
K SS =	9.00%

D Factors
59.0% NB
41.0% SB
39.0% WB
61.0% EB

DESIGN HOUR TURNING MOVEMENTS IN YEAR 2025

Belle Terre Pkwy
(33000)
1205
2.7% 33 | 72.7% 876 | 24.6% 296

Royal Palms Pkwy - PM
286 65.4%
82 18.7% 438 (12000)
70 15.9%

(7300) 401
12.1% 49
45.3% 181
42.6% 171

Royal Palms Pkwy - PM

146 8.5% | 1416 82.5% | 155 9.0%
1717
(32000)
Belle Terre Pkwy

(XXXXX)	2025 AADT
XXXX	2025 DDHV
K ML =	9.00%
K SS =	9.00%

D Factors
59.0% NB
41.0% SB
39.0% WB
61.0% EB

DESIGN HOUR TURNING MOVEMENTS IN YEAR 2030

Belle Terre Pkwy
(36000)
1328
2.0% 27 | 70.9% 941 | 27.1% 360

Royal Palms Pkwy - PM
342 60.9%
106 18.8% 562 (16000)
114 20.3%

(8700) 478
8.6% 41
49.9% 239
41.5% 198

Royal Palms Pkwy - PM

162 8.7% | 1450 78.0% | 247 13.3%
1859
(35000)
Belle Terre Pkwy

(XXXXX)	2030 AADT
XXXX	2030 DDHV
K ML =	9.00%
K SS =	9.00%

D Factors
59.0% NB
41.0% SB
39.0% WB
61.0% EB

PROJECT TRAFFIC FOR Belle Terre Pkwy AT Royal Palms Pkwy - PM

2015 INPUT TMCs COMPARED TO 2015 DHV

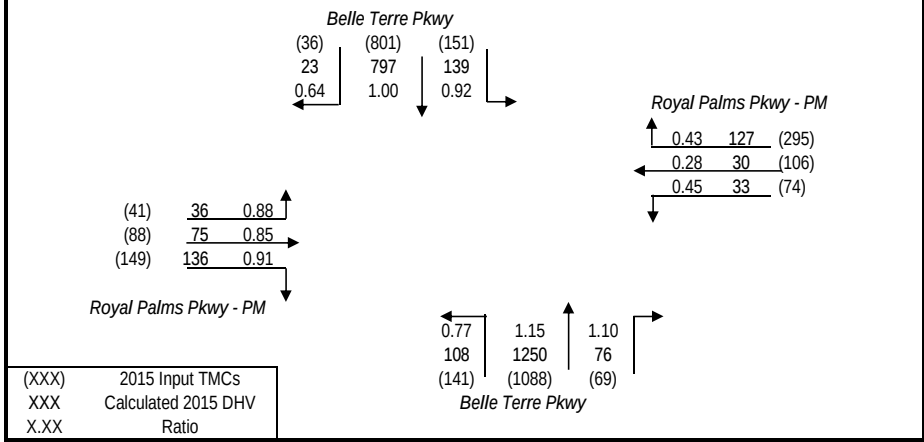

2015 INPUT TMCs COMPARED TO 2020 DHV

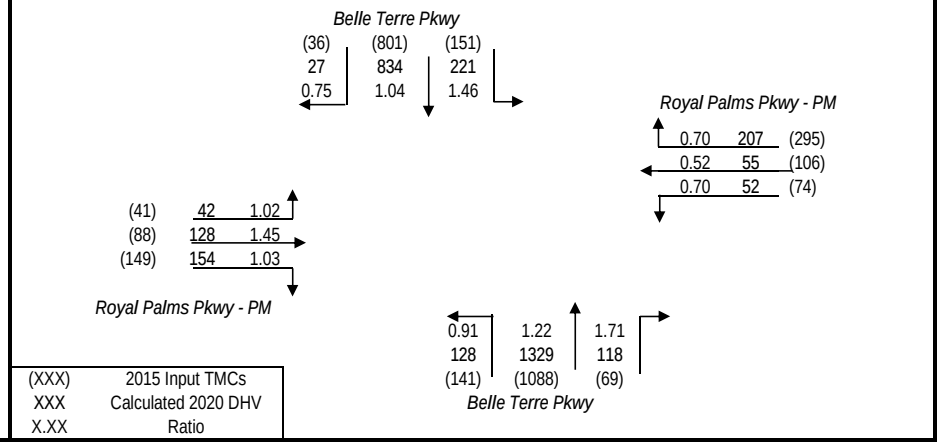

2015 INPUT TMCs COMPARED TO 2025 DHV

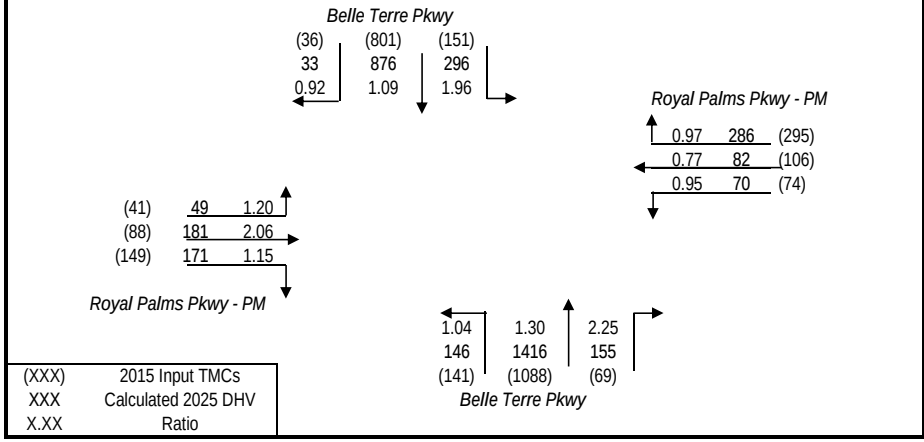

2015 INPUT TMCs COMPARED TO 2030 DHV

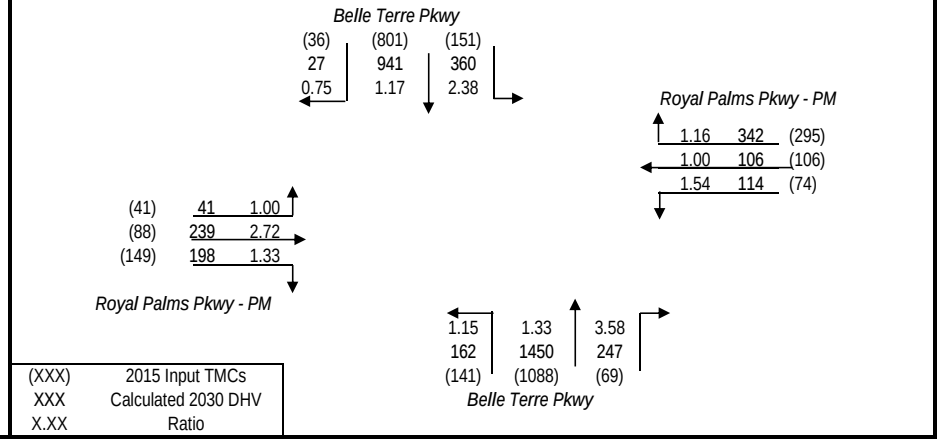

TURNS5 ANALYSIS SHEET - INPUT

Analyst:	-
Date:	13-Nov-15
Highway:	Belle Terre Pkwy
Intersection:	Point Pleasant Dr - PM
Project:	Belle Terre Blvd/Pkwy Intersection Analysis
County:	Flagler

Is this a 4 way intersection?

- ○ Yes, my intersection has four approaches

If not, which 3 approaches exist in the intersection?

- ○ EB, WB, and SB
- ○ EB, WB, and NB
- ○ EB, SB, and NB
- ◉ WB, SB, and NB

Is the Mainline Oriented North/South? (Enter Yes or No)

- ◉ Yes
- ○ No

K Factors	
Mainline	9.00%
Side street	9.00%

D Factors	*Mainline*
Northbound (NB)	59.0%
Southbound (SB)	41.0%
	Side street
Westbound (WB)	39.0%
Eastbound (EB)	0.0%

Do you have FTSUTMS Model Year traffic from which you would like to interpolate/extrapolate for project years? (Y/N) (Enter Yes or No)

- ◉ Yes
- ○ No

If "Yes" go to cell C47 If "No" go to cell C31

Enter Year and Growth Rates from Base Year:

	Year	*Rate* (1.0% = 0.01) Mainline	Side Street
Base	2015	0.00%	0.00%
Opening	2025		
Mid	2035		
Design	2045		

Mainline Growth Function

- ◉ Linear
- ○ Exponential
- ○ Decaying

Side Street Growth Function

- ◉ Linear
- ○ Exponential
- ○ Decaying

Enter Base Year AADTs for Volume Comparison:
(growth rates are used to calculate other project years)

From West: EB Approach	*From East: WB Approach*	*From North: SB Approach*	*From South: NB Approach*	***TOTAL***
0	0	0	0	0

Enter Project and Model Years

	Year
Base	2015
Opening	2020
Mid	2025
Design	2030
Model	2030

Enter Base and Model Year AADTs for Volume Comparison:
(volumes for other project years are calculated by interpolation)

	From West: EB Approach	*From East: WB Approach*	*From North: SB Approach*	*From South: NB Approach*	***TOTAL***
2015	0	1700	26000	26000	53700
2030	0	2200	36000	36000	74200

		1st Guess Turning %'s for AADT Balancing	**Actual/Counted Traffic for 2015**
(EB LT)	*West-to-North*	0.0%	0
(EB THRU)	*West-to-East*	0.0%	0
(EB RT)	*West-to-South*	0.0%	0
(WB LT)	*East-to-South*	58.5%	38
(WB THRU)	*East-to-West*	0.0%	0
(WB RT)	*East-to-North*	41.5%	27
(SB LT)	*North-to-East*	3.6%	35
(SB THRU)	*North-to-South*	96.4%	950
(SB RT)	*North-to-West*	0.0%	0
(NB LT)	*South-to-West*	0.0%	0
(NB THRU)	*South-to-North*	96.3%	1371
(NB RT)	*South-to-East*	3.7%	53

Desired Closure: 1.00

Existing Year AADTs

Existing Turning Movement Counts

FSUTMS Model Year AADTs

First Guess Turning % Option Used
Existing Turning Movement Counts

Only the existing year total departure volumes [AADT*K*(1-D)] will be used to calculate the turning percentages first guess.

The turning percentages first guess is the same as the ***actual distribution of turning volumes entered***. No balancing technique is used.

Only the FSUTMS model year departure volumes [AADT*K*(1-D)] will be used to calculate the turning percentages first guess.

PROJECT TRAFFIC FOR Belle Terre Pkwy AT Point Pleasant Dr - PM

DESIGN HOUR TURNING MOVEMENTS IN YEAR 2015

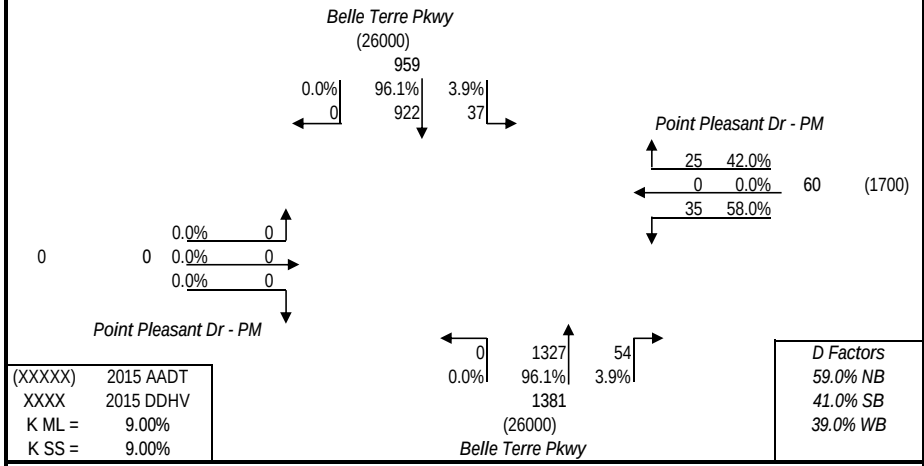

(XXXXX)	2015 AADT
XXXX	2015 DDHV
K ML =	9.00%
K SS =	9.00%

D Factors
59.0% NB
41.0% SB
39.0% WB

DESIGN HOUR TURNING MOVEMENTS IN YEAR 2020

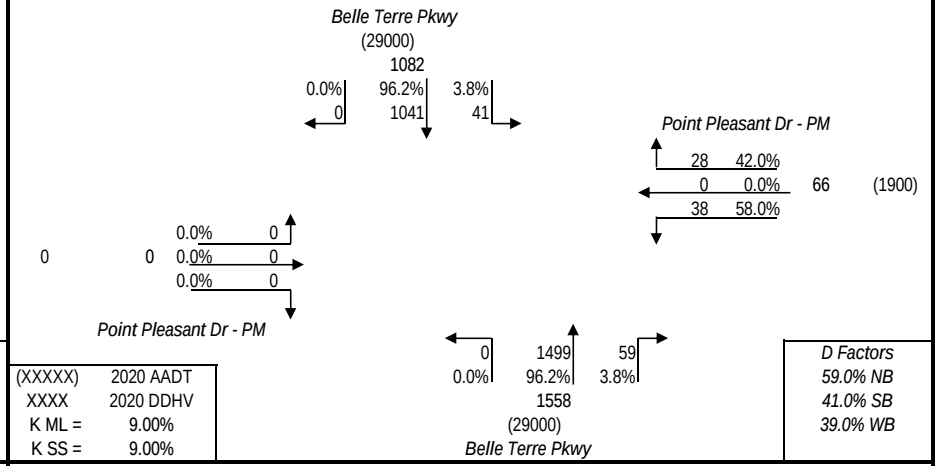

(XXXXX)	2020 AADT
XXXX	2020 DDHV
K ML =	9.00%
K SS =	9.00%

D Factors
59.0% NB
41.0% SB
39.0% WB

DESIGN HOUR TURNING MOVEMENTS IN YEAR 2025

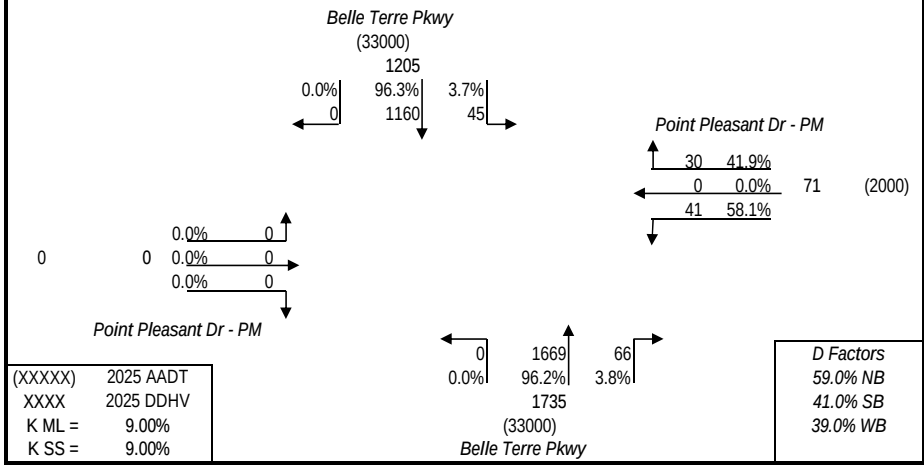

(XXXXX)	2025 AADT
XXXX	2025 DDHV
K ML =	9.00%
K SS =	9.00%

D Factors
59.0% NB
41.0% SB
39.0% WB

DESIGN HOUR TURNING MOVEMENTS IN YEAR 2030

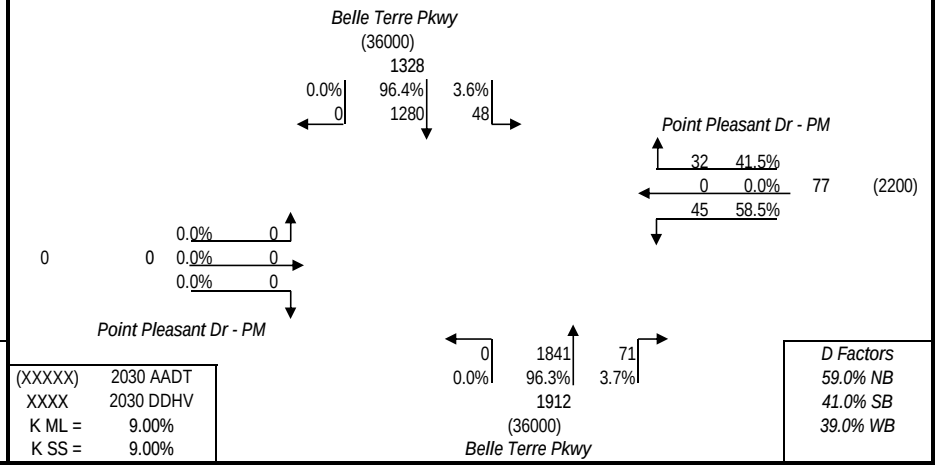

(XXXXX)	2030 AADT
XXXX	2030 DDHV
K ML =	9.00%
K SS =	9.00%

D Factors
59.0% NB
41.0% SB
39.0% WB

PROJECT TRAFFIC FOR Belle Terre Pkwy AT Point Pleasant Dr - PM

2015 INPUT TMCs COMPARED TO 2015 DHV

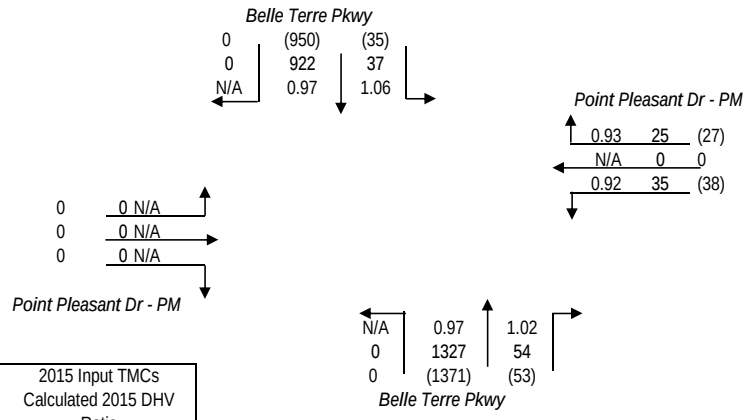

(XXX)	2015 Input TMCs
XXX	Calculated 2015 DHV
X.XX	Ratio

2015 INPUT TMCs COMPARED TO 2020 DHV

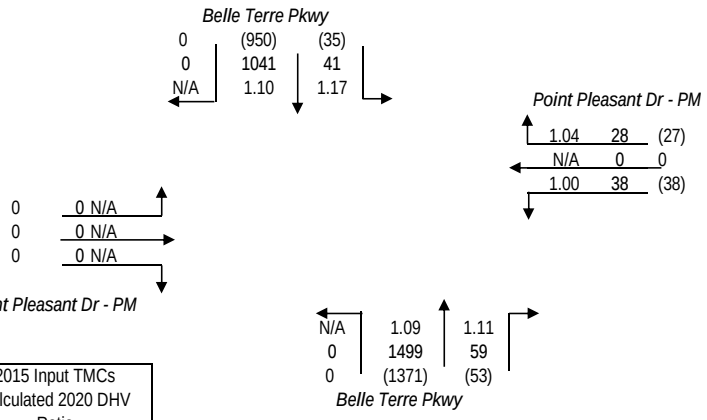

(XXX)	2015 Input TMCs
XXX	Calculated 2020 DHV
X.XX	Ratio

2015 INPUT TMCs COMPARED TO 2025 DHV

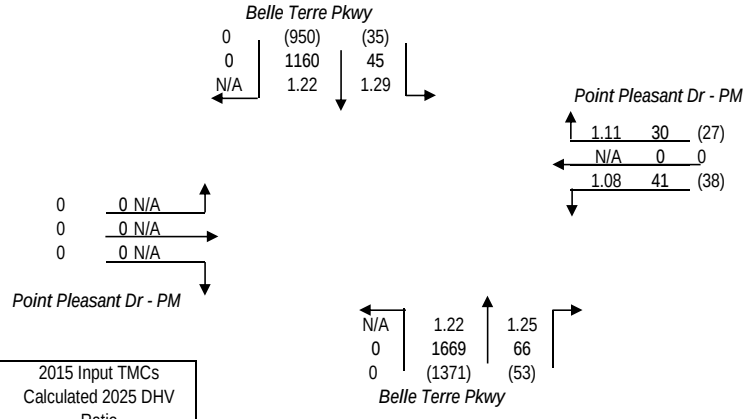

(XXX)	2015 Input TMCs
XXX	Calculated 2025 DHV
X.XX	Ratio

2015 INPUT TMCs COMPARED TO 2030 DHV

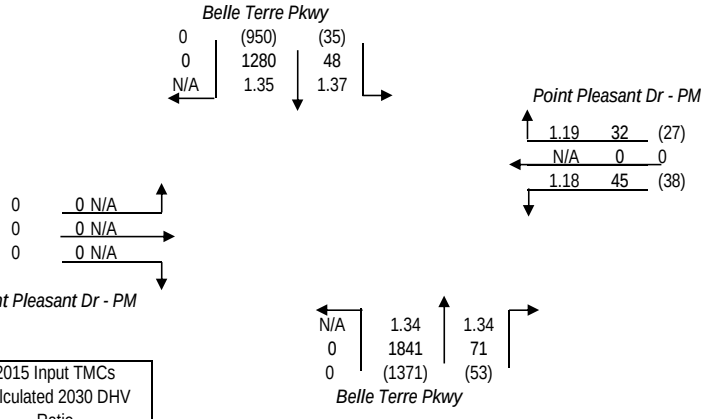

(XXX)	2015 Input TMCs
XXX	Calculated 2030 DHV
X.XX	Ratio

TURNS5 ANALYSIS SHEET - INPUT

Analyst: -
Date: 13-Nov-15
Highway: Belle Terre Pkwy
Intersection: Rymfire Dr - PM
Project: Belle Terre Blvd/Pkwy Intersection Analysis
County: Flagler

Is this a 4 way intersection?
- ○ Yes, my intersection has four approaches

If not, which 3 approaches exist in the intersection?
- ○ EB, WB, and SB
- ○ EB, WB, and NB
- ◉ EB, SB, and NB
- ○ WB, SB, and NB

Is the Mainline Oriented North/South? (Enter Yes or No)
- ◉ Yes
- ○ No

K Factors	
Mainline	9.00%
Side street	9.00%

D Factors	*Mainline*
Northbound (NB)	59.0%
Southbound (SB)	41.0%
	Side street
Westbound (WB)	0.0%
Eastbound (EB)	39.0%

Do you have FTSUTMS Model Year traffic from which you would like to interpolate/extrapolate for project years? (Y/N) (Enter Yes or No)
- ◉ Yes
- ○ No

If "Yes" go to cell C47 If "No" go to cell C31

Enter Year and Growth Rates from Base Year:

	Year	*Rate* (1.0% = 0.01) **Mainline**	**Side Street**
Base	2015	0.00%	0.00%
Opening	2025		
Mid	2035		
Design	2045		

Mainline Growth Function
- ◉ Linear
- ○ Exponential
- ○ Decaying

Side Street Growth Function
- ◉ Linear
- ○ Exponential
- ○ Decaying

Enter Base Year AADTs for Volume Comparison:
(growth rates are used to calculate other project years)

From West: EB Approach	*From East: WB Approach*	*From North: SB Approach*	*From South: NB Approach*	***TOTAL***
0	0	0	0	0

Enter Project and Model Years

	Year
Base	2015
Opening	2020
Mid	2025
Design	2030
Model	2030

Enter Base and Model Year AADTs for Volume Comparison:
(volumes for other project years are calculated by interpolation)

	From West: EB Approach	*From East: WB Approach*	*From North: SB Approach*	*From South: NB Approach*	***TOTAL***
2015	2700	0	26000	26000	54700
2030	9900	0	33000	36000	78900

First Guess Turning % Option Used
Existing Turning Movement Counts

		1st Guess Turning %'s for AADT Balancing	**Actual/Counted Traffic for 2015**
(EB LT)	*West-to-North*	37.8%	133
(EB THRU)	*West-to-East*	0.0%	0
(EB RT)	*West-to-South*	62.2%	219
(WB LT)	*East-to-South*	0.0%	0
(WB THRU)	*East-to-West*	0.0%	0
(WB RT)	*East-to-North*	0.0%	0
(SB LT)	*North-to-East*	0.0%	0
(SB THRU)	*North-to-South*	82.7%	766
(SB RT)	*North-to-West*	17.3%	160
(NB LT)	*South-to-West*	25.4%	355
(NB THRU)	*South-to-North*	74.6%	1043
(NB RT)	*South-to-East*	0.0%	0

Desired Closure: 1.50

Existing Year AADTs

Only the existing year total departure volumes [AADT*K*(1-D)] will be used to calculate the turning percentages first guess.

Existing Turning Movement Counts

The turning percentages first guess is the same as the ***actual distribution of turning volumes entered***. No balancing technique is used.

FSUTMS Model Year AADTs

Only the FSUTMS model year departure volumes [AADT*K*(1-D)] will be used to calculate the turning percentages first guess.

PROJECT TRAFFIC FOR Belle Terre Pkwy AT Rymfire Dr - PM

DESIGN HOUR TURNING MOVEMENTS IN YEAR 2015

Belle Terre Pkwy
(26000)
959

5.1% 49 | 94.9% 910 | 0.0% 0

Rymfire Dr - PM
0 0.0%
0 0.0% 0 0
0 0.0%

(2700) 95
41.2% 39
0.0% 0
58.8% 56

Rymfire Dr - PM

97 | 1284 | 0
7.0% | 93.0% | 0.0%
1381
(26000)
Belle Terre Pkwy

(XXXXX)	2015 AADT
XXXX	2015 DDHV
K ML =	9.00%
K SS =	9.00%

D Factors
59.0% NB
41.0% SB
39.0% EB

DESIGN HOUR TURNING MOVEMENTS IN YEAR 2020

Belle Terre Pkwy
(28000)
1045

8.4% 88 | 91.6% 957 | 0.0% 0

Rymfire Dr - PM
0 0.0%
0 0.0% 0 0
0 0.0%

(5100) 179
40.1% 72
0.0% 0
59.9% 107

Rymfire Dr - PM

185 | 1373 | 0
11.9% | 88.1% | 0.0%
1558
(29000)
Belle Terre Pkwy

(XXXXX)	2020 AADT
XXXX	2020 DDHV
K ML =	9.00%
K SS =	9.00%

D Factors
59.0% NB
41.0% SB
39.0% EB

DESIGN HOUR TURNING MOVEMENTS IN YEAR 2025

Belle Terre Pkwy
(31000)
1132

11.0% 125 | 89.0% 1007 | 0.0% 0

Rymfire Dr - PM
0 0.0%
0 0.0% 0 0
0 0.0%

(7500) 263
39.3% 103
0.0% 0
60.7% 160

Rymfire Dr - PM

276 | 1459 | 0
15.9% | 84.1% | 0.0%
1735
(33000)
Belle Terre Pkwy

(XXXXX)	2025 AADT
XXXX	2025 DDHV
K ML =	9.00%
K SS =	9.00%

D Factors
59.0% NB
41.0% SB
39.0% EB

DESIGN HOUR TURNING MOVEMENTS IN YEAR 2030

Belle Terre Pkwy
(33000)
1218

12.1% 147 | 87.9% 1071 | 0.0% 0

Rymfire Dr - PM
0 0.0%
0 0.0% 0 0
0 0.0%

(9900) 347
36.0% 125
0.0% 0
64.0% 222

Rymfire Dr - PM

373 | 1539 | 0
19.5% | 80.5% | 0.0%
1912
(36000)
Belle Terre Pkwy

(XXXXX)	2030 AADT
XXXX	2030 DDHV
K ML =	9.00%
K SS =	9.00%

D Factors
59.0% NB
41.0% SB
39.0% EB

PROJECT TRAFFIC FOR Belle Terre Pkwy AT Rymfire Dr - PM

2015 INPUT TMCs COMPARED TO 2015 DHV

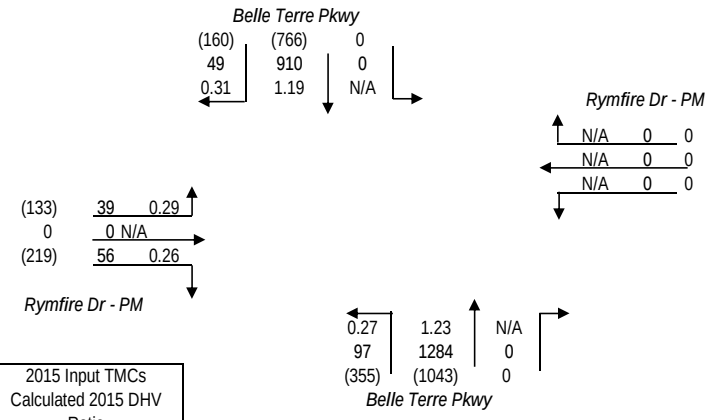

(XXX)	2015 Input TMCs
XXX	Calculated 2015 DHV
X.XX	Ratio

2015 INPUT TMCs COMPARED TO 2020 DHV

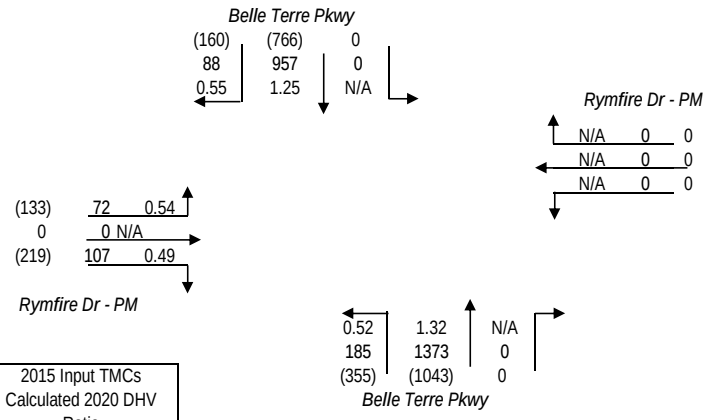

(XXX)	2015 Input TMCs
XXX	Calculated 2020 DHV
X.XX	Ratio

2015 INPUT TMCs COMPARED TO 2025 DHV

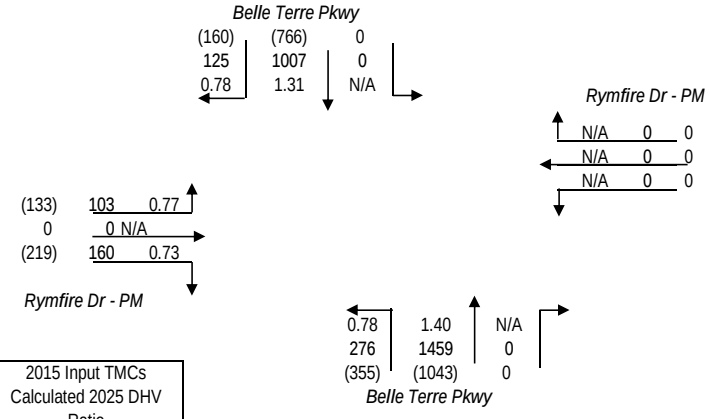

(XXX)	2015 Input TMCs
XXX	Calculated 2025 DHV
X.XX	Ratio

2015 INPUT TMCs COMPARED TO 2030 DHV

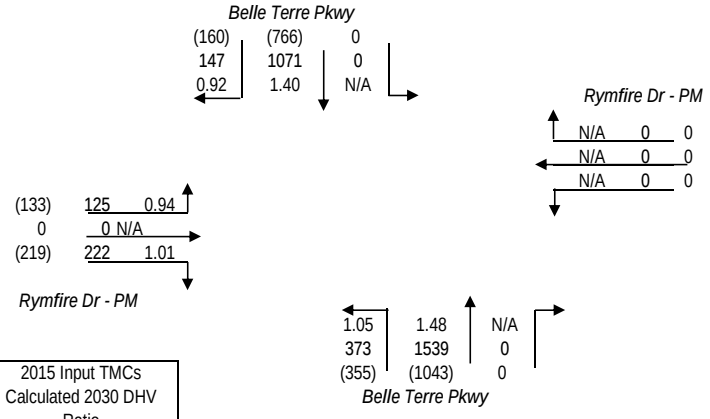

(XXX)	2015 Input TMCs
XXX	Calculated 2030 DHV
X.XX	Ratio

TURNS5 ANALYSIS SHEET - INPUT

Analyst:	-
Date:	13-Nov-15
Highway:	Belle Terre Pkwy
Intersection:	Ponce de Leon Dr - PM
Project:	Belle Terre Blvd/Pkwy Intersection Analysis
County:	Flagler

Is this a 4 way intersection?

- ○ Yes, my intersection has four approaches

If not, which 3 approaches exist in the intersection?

- ○ EB, WB, and SB
- ○ EB, WB, and NB
- ○ EB, SB, and NB
- ◉ WB, SB, and NB

Is the Mainline Oriented North/South? (Enter Yes or No)

- ◉ Yes
- ○ No

K Factors	
Mainline	9.00%
Side street	9.00%

D Factors	*Mainline*
Northbound (NB)	59.0%
Southbound (SB)	41.0%
	Side street
Westbound (WB)	39.0%
Eastbound (EB)	0.0%

Do you have FTSUTMS Model Year traffic from which you would like to interpolate/extrapolate for project years? (Y/N) (Enter Yes or No)

- ◉ Yes
- ○ No

If "Yes" go to cell C47 — If "No" go to cell C31

Enter Year and Growth Rates from Base Year:

	Year	*Rate* (1.0% = 0.01) Mainline	Side Street
Base	2015	0.00%	0.00%
Opening	2025		
Mid	2035		
Design	2045		

Mainline Growth Function
- ◉ Linear
- ○ Exponential
- ○ Decaying

Side Street Growth Function
- ◉ Linear
- ○ Exponential
- ○ Decaying

Enter Base Year AADTs for Volume Comparison:
(growth rates are used to calculate other project years)

From West: EB Approach	*From East: WB Approach*	*From North: SB Approach*	*From South: NB Approach*	***TOTAL***
0	0	0	0	0

Enter Project and Model Years

	Year
Base	2015
Opening	2020
Mid	2025
Design	2030
Model	2030

Enter Base and Model Year AADTs for Volume Comparison:
(volumes for other project years are calculated by interpolation)

	From West: EB Approach	*From East: WB Approach*	*From North: SB Approach*	*From South: NB Approach*	***TOTAL***
2015	0	2222	26000	26000	54222
2030	0	2900	33000	33000	68900

First Guess Turning % Option Used
Existing Turning Movement Counts

		1st Guess Turning %'s for AADT Balancing	**Actual/Counted Traffic for 2015**
(EB LT)	*West-to-North*	0.0%	0
(EB THRU)	*West-to-East*	0.0%	0
(EB RT)	*West-to-South*	0.0%	0
(WB LT)	*East-to-South*	42.7%	35
(WB THRU)	*East-to-West*	0.0%	0
(WB RT)	*East-to-North*	57.3%	47
(SB LT)	*North-to-East*	7.9%	76
(SB THRU)	*North-to-South*	92.1%	891
(SB RT)	*North-to-West*	0.0%	0
(NB LT)	*South-to-West*	0.0%	0
(NB THRU)	*South-to-North*	96.4%	1134
(NB RT)	*South-to-East*	3.6%	42

Desired Closure: 1.50

Existing Year AADTs

Only the existing year total departure volumes [AADT*K*(1-D)] will be used to calculate the turning percentages first guess.

Existing Turning Movement Counts

The turning percentages first guess is the same as the ***actual distribution of turning volumes entered***. No balancing technique is used.

FSUTMS Model Year AADTs

Only the FSUTMS model year departure volumes [AADT*K*(1-D)] will be used to calculate the turning percentages first guess.

PROJECT TRAFFIC FOR Belle Terre Pkwy AT Ponce de Leon Dr - PM

DESIGN HOUR TURNING MOVEMENTS IN YEAR 2015

Belle Terre Pkwy
(26000)
959

0.0% 0 | 92.6% 888 | 7.4% 71

Ponce de Leon Dr - PM
44 56.3%
0 0.0% 78 (2200)
34 43.7%

0.0% 0
0 0 0.0% 0
0.0% 0

Ponce de Leon Dr - PM

0 | 1333 | 48
0.0% | 96.5% | 3.5%
1381
(26000)
Belle Terre Pkwy

(XXXXX)	2015 AADT
XXXX	2015 DDHV
K ML =	9.00%
K SS =	9.00%

D Factors
59.0% NB
41.0% SB
39.0% WB

DESIGN HOUR TURNING MOVEMENTS IN YEAR 2020

Belle Terre Pkwy
(28000)
1045

0.0% 0 | 92.6% 968 | 7.4% 77

Ponce de Leon Dr - PM
48 56.3%
0 0.0% 86 (2400)
38 43.7%

0.0% 0
0 0 0.0% 0
0.0% 0

Ponce de Leon Dr - PM

0 | 1451 | 53
0.0% | 96.5% | 3.5%
1504
(28000)
Belle Terre Pkwy

(XXXXX)	2020 AADT
XXXX	2020 DDHV
K ML =	9.00%
K SS =	9.00%

D Factors
59.0% NB
41.0% SB
39.0% WB

DESIGN HOUR TURNING MOVEMENTS IN YEAR 2025

Belle Terre Pkwy
(31000)
1132

0.0% 0 | 92.5% 1047 | 7.5% 85

Ponce de Leon Dr - PM
53 56.3%
0 0.0% 94 (2700)
41 43.7%

0.0% 0
0 0 0.0% 0
0.0% 0

Ponce de Leon Dr - PM

0 | 1569 | 59
0.0% | 96.4% | 3.6%
1628
(31000)
Belle Terre Pkwy

(XXXXX)	2025 AADT
XXXX	2025 DDHV
K ML =	9.00%
K SS =	9.00%

D Factors
59.0% NB
41.0% SB
39.0% WB

DESIGN HOUR TURNING MOVEMENTS IN YEAR 2030

Belle Terre Pkwy
(33000)
1218

0.0% 0 | 92.5% 1127 | 7.5% 91

Ponce de Leon Dr - PM
57 55.7%
0 0.0% 102 (2900)
45 44.3%

0.0% 0
0 0 0.0% 0
0.0% 0

Ponce de Leon Dr - PM

0 | 1689 | 63
0.0% | 96.4% | 3.6%
1752
(33000)
Belle Terre Pkwy

(XXXXX)	2030 AADT
XXXX	2030 DDHV
K ML =	9.00%
K SS =	9.00%

D Factors
59.0% NB
41.0% SB
39.0% WB

PROJECT TRAFFIC FOR Belle Terre Pkwy AT Ponce de Leon Dr - PM

2015 INPUT TMCs COMPARED TO 2015 DHV

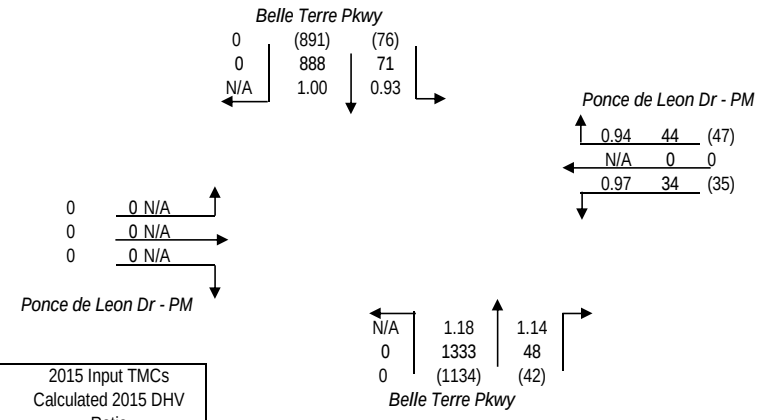

(XXX)	2015 Input TMCs
XXX	Calculated 2015 DHV
X.XX	Ratio

2015 INPUT TMCs COMPARED TO 2020 DHV

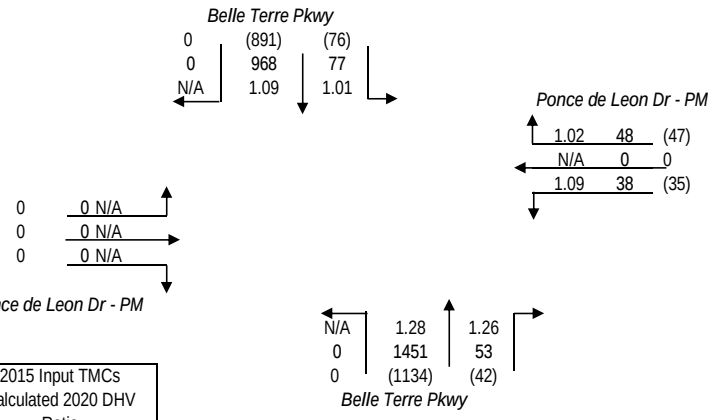

(XXX)	2015 Input TMCs
XXX	Calculated 2020 DHV
X.XX	Ratio

2015 INPUT TMCs COMPARED TO 2025 DHV

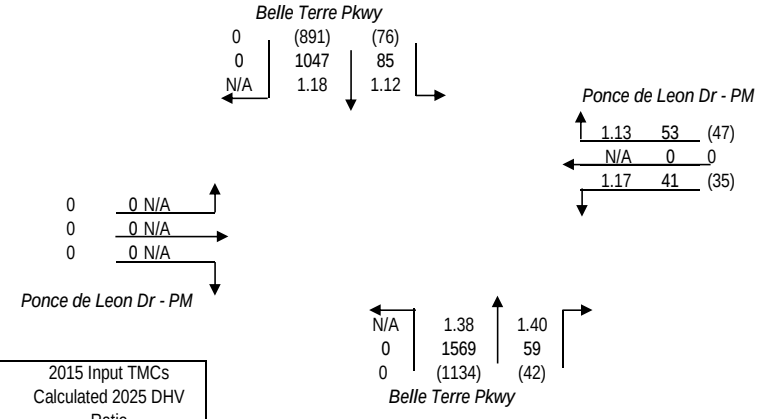

(XXX)	2015 Input TMCs
XXX	Calculated 2025 DHV
X.XX	Ratio

2015 INPUT TMCs COMPARED TO 2030 DHV

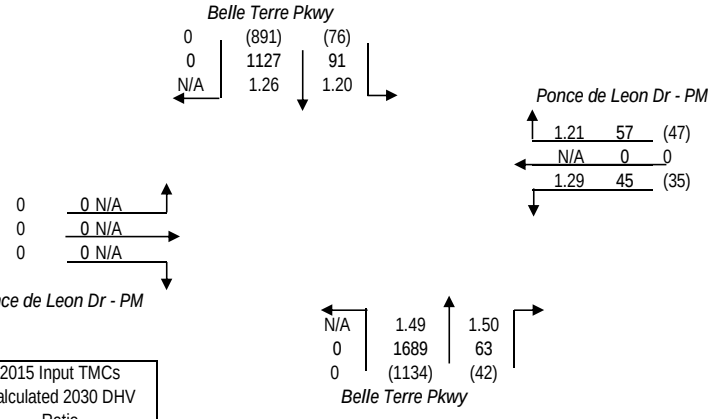

(XXX)	2015 Input TMCs
XXX	Calculated 2030 DHV
X.XX	Ratio

TURNS5 ANALYSIS SHEET - INPUT

Analyst: -
Date: 13-Nov-15
Highway: Belle Terre Pkwy
Intersection: Pine Grove Dr - PM
Project: Belle Terre Blvd/Pkwy Intersection Analysis
County: Flagler

Is this a 4 way intersection?
- ○ Yes, my intersection has four approaches

If not, which 3 approaches exist in the intersection?
- ○ EB, WB, and SB
- ○ EB, WB, and NB
- ○ EB, SB, and NB
- ◉ WB, SB, and NB

Is the Mainline Oriented North/South? (Enter Yes or No)
- ◉ Yes
- ○ No

K Factors	
Mainline	9.00%
Side street	9.00%

D Factors	*Mainline*
Northbound (NB)	59.0%
Southbound (SB)	41.0%
	Side street
Westbound (WB)	39.0%
Eastbound (EB)	0.0%

Do you have FTSUTMS Model Year traffic from which you would like to interpolate/extrapolate for project years? (Y/N) (Enter Yes or No)
- ◉ Yes
- ○ No

If "Yes" go to cell C47 If "No" go to cell C31

Enter Year and Growth Rates from Base Year:

	Year	*Rate* (1.0% = 0.01) Mainline	Side Street
Base	2015	0.00%	0.00%
Opening	2025		
Mid	2035		
Design	2045		

Mainline Growth Function
- ◉ Linear
- ○ Exponential
- ○ Decaying

Side Street Growth Function
- ◉ Linear
- ○ Exponential
- ○ Decaying

Enter Base Year AADTs for Volume Comparison:
(growth rates are used to calculate other project years)

From West: EB Approach	*From East: WB Approach*	*From North: SB Approach*	*From South: NB Approach*	***TOTAL***
0	0	0	0	0

Enter Project and Model Years

	Year
Base	2015
Opening	2020
Mid	2025
Design	2030
Model	2030

Enter Base and Model Year AADTs for Volume Comparison:
(volumes for other project years are calculated by interpolation)

	From West: EB Approach	*From East: WB Approach*	*From North: SB Approach*	*From South: NB Approach*	***TOTAL***
2015	0	4133	26000	26000	56133
2030	0	5300	34000	33000	72300

		1st Guess Turning %'s for AADT Balancing	**Actual/Counted Traffic for 2015**
(EB LT)	*West-to-North*	0.0%	0
(EB THRU)	*West-to-East*	0.0%	0
(EB RT)	*West-to-South*	0.0%	0
(WB LT)	*East-to-South*	66.7%	80
(WB THRU)	*East-to-West*	0.0%	0
(WB RT)	*East-to-North*	33.3%	40
(SB LT)	*North-to-East*	8.7%	84
(SB THRU)	*North-to-South*	91.3%	887
(SB RT)	*North-to-West*	0.0%	0
(NB LT)	*South-to-West*	0.0%	0
(NB THRU)	*South-to-North*	85.8%	1013
(NB RT)	*South-to-East*	14.2%	168

Desired Closure: 2.00

Existing Year AADTs

Existing Turning Movement Counts

FSUTMS Model Year AADTs

First Guess Turning % Option Used
Existing Turning Movement Counts

Only the existing year total departure volumes [AADT*K*(1-D)] will be used to calculate the turning percentages first guess.

The turning percentages first guess is the same as the ***actual distribution of turning volumes entered***. No balancing technique is used.

Only the FSUTMS model year departure volumes [AADT*K*(1-D)] will be used to calculate the turning percentages first guess.

PROJECT TRAFFIC FOR Belle Terre Pkwy AT Pine Grove Dr - PM

DESIGN HOUR TURNING MOVEMENTS IN YEAR 2015

Belle Terre Pkwy
(26000)
959

0.0% 0 | 92.7% 889 | 7.3% 70

Pine Grove Dr - PM
52 36.2%
0 0.0% 145 (4100)
93 63.8%

0.0% 0
0 0 0.0% 0
0.0% 0

Pine Grove Dr - PM

0 | 0.0% 1233 | 148 10.7%
1381
(26000)
Belle Terre Pkwy

(XXXXX)	2015 AADT
XXXX	2015 DDHV
K ML =	9.00%
K SS =	9.00%

D Factors
59.0% NB
41.0% SB
39.0% WB

DESIGN HOUR TURNING MOVEMENTS IN YEAR 2020

Belle Terre Pkwy
(29000)
1058

0.0% 0 | 92.7% 981 | 7.3% 77

Pine Grove Dr - PM
58 36.7%
0 0.0% 159 (4500)
101 63.3%

0.0% 0
0 0 0.0% 0
0.0% 0

Pine Grove Dr - PM

0 | 0.0% 1345 | 159 10.6%
1504
(28000)
Belle Terre Pkwy

(XXXXX)	2020 AADT
XXXX	2020 DDHV
K ML =	9.00%
K SS =	9.00%

D Factors
59.0% NB
41.0% SB
39.0% WB

DESIGN HOUR TURNING MOVEMENTS IN YEAR 2025

Belle Terre Pkwy
(31000)
1156

0.0% 0 | 92.6% 1070 | 7.4% 86

Pine Grove Dr - PM
64 37.1%
0 0.0% 172 (4900)
108 62.9%

0.0% 0
0 0 0.0% 0
0.0% 0

Pine Grove Dr - PM

0 | 0.0% 1457 | 171 10.5%
1628
(31000)
Belle Terre Pkwy

(XXXXX)	2025 AADT
XXXX	2025 DDHV
K ML =	9.00%
K SS =	9.00%

D Factors
59.0% NB
41.0% SB
39.0% WB

DESIGN HOUR TURNING MOVEMENTS IN YEAR 2030

Belle Terre Pkwy
(34000)
1255

0.0% 0 | 90.9% 1141 | 9.1% 114

Pine Grove Dr - PM
85 45.7%
0 0.0% 186 (5300)
101 54.3%

0.0% 0
0 0 0.0% 0
0.0% 0

Pine Grove Dr - PM

0 | 0.0% 1587 | 165 9.4%
1752
(33000)
Belle Terre Pkwy

(XXXXX)	2030 AADT
XXXX	2030 DDHV
K ML =	9.00%
K SS =	9.00%

D Factors
59.0% NB
41.0% SB
39.0% WB

PROJECT TRAFFIC FOR Belle Terre Pkwy AT Pine Grove Dr - PM

2015 INPUT TMCs COMPARED TO 2015 DHV

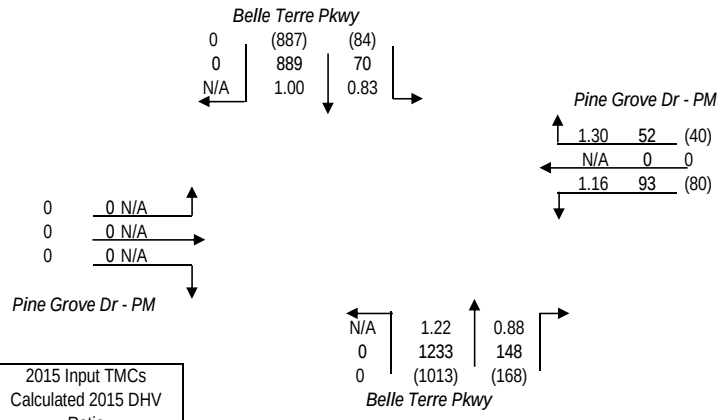

(XXX)	2015 Input TMCs
XXX	Calculated 2015 DHV
X.XX	Ratio

2015 INPUT TMCs COMPARED TO 2020 DHV

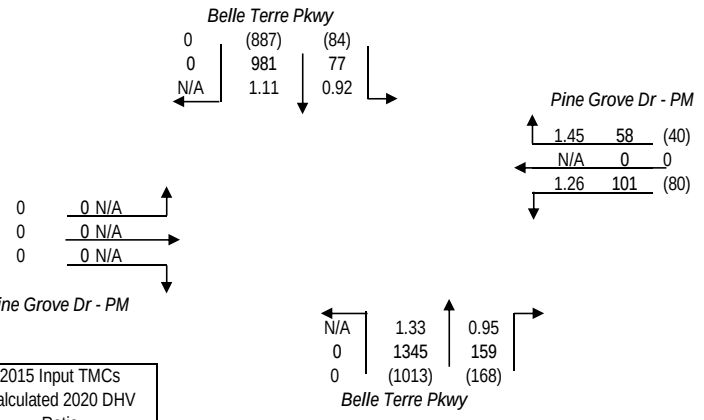

(XXX)	2015 Input TMCs
XXX	Calculated 2020 DHV
X.XX	Ratio

2015 INPUT TMCs COMPARED TO 2025 DHV

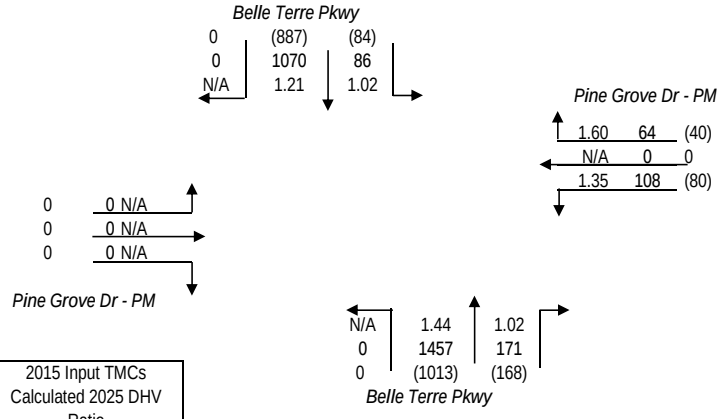

(XXX)	2015 Input TMCs
XXX	Calculated 2025 DHV
X.XX	Ratio

2015 INPUT TMCs COMPARED TO 2030 DHV

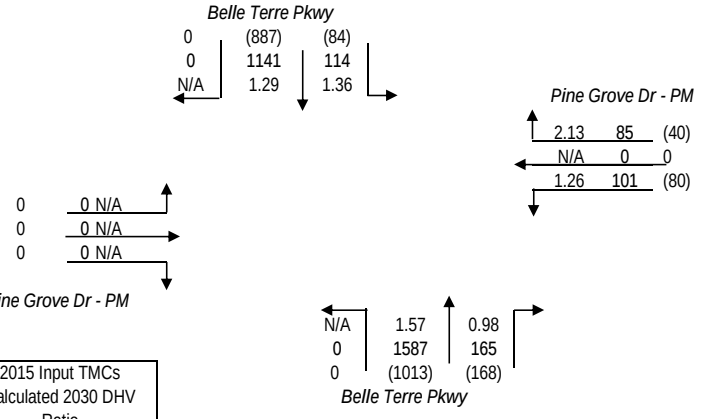

(XXX)	2015 Input TMCs
XXX	Calculated 2030 DHV
X.XX	Ratio

TURNS5 ANALYSIS SHEET - INPUT

Analyst:	-
Date:	13-Nov-15
Highway:	Belle Terre Pkwy
Intersection:	Whiteview Pkwy - PM
Project:	Belle Terre Blvd/Pkwy Intersection Analysis
County:	Flagler

Is this a 4 way intersection?

- (●) Yes, my intersection has four approaches

If not, which 3 approaches exist in the intersection?

- ( ) EB, WB, and SB
- ( ) EB, WB, and NB
- ( ) EB, SB, and NB
- ( ) WB, SB, and NB

Is the Mainline Oriented North/South? Enter Yes or No: (●) Yes ( ) No

K Factors	
Mainline	9.00%
Side street	9.00%

D Factors	*Mainline*
Northbound (NB)	59.0%
Southbound (SB)	41.0%
	Side street
Westbound (WB)	39.0%
Eastbound (EB)	61.0%

Do you have FTSUTMS Model Year traffic from which you would like to interpolate/extrapolate for project years? (Y/N)

Enter Yes or No: (●) Yes ( ) No

If "Yes" go to cell C47 — If "No" go to cell C31

Enter Year and Growth Rates from Base Year:

	Year	*Rate* (1.0% = 0.01) Mainline	Side Street
Base	2015	0.00%	0.00%
Opening	2025		
Mid	2035		
Design	2045		

Mainline Growth Function: (●) Linear ( ) Exponential ( ) Decaying

Side Street Growth Function: (●) Linear ( ) Exponential ( ) Decaying

Enter Base Year AADTs for Volume Comparison:
(growth rates are used to calculate other project years)

From West: EB Approach	*From East: WB Approach*	*From North: SB Approach*	*From South: NB Approach*	***TOTAL***
0	0	0	0	0

Enter Project and Model Years

	Year
Base	2015
Opening	2020
Mid	2025
Design	2030
Model	2030

Enter Base and Model Year AADTs for Volume Comparison:
(volumes for other project years are calculated by interpolation)

	From West: EB Approach	*From East: WB Approach*	*From North: SB Approach*	*From South: NB Approach*	***TOTAL***
2015	5400	4200	27000	26000	62600
2030	8600	6700	34000	34000	83300

First Guess Turning % Option Used
Existing Turning Movement Counts

		1st Guess Turning %'s for AADT Balancing	**Actual/Counted Traffic for 2015**
(EB LT)	*West-to-North*	38.6%	113
(EB THRU)	*West-to-East*	25.9%	76
(EB RT)	*West-to-South*	35.5%	104
(WB LT)	*East-to-South*	43.1%	69
(WB THRU)	*East-to-West*	23.8%	38
(WB RT)	*East-to-North*	33.1%	53
(SB LT)	*North-to-East*	6.0%	61
(SB THRU)	*North-to-South*	78.5%	798
(SB RT)	*North-to-West*	15.5%	158
(NB LT)	*South-to-West*	12.3%	129
(NB THRU)	*South-to-North*	78.7%	829
(NB RT)	*South-to-East*	9.0%	95

Desired Closure: 1.00

Existing Year AADTs — Only the existing year total departure volumes [AADT*K*(1-D)] will be used to calculate the turning percentages first guess.

Existing Turning Movement Counts — The turning percentages first guess is the same as the ***actual distribution of turning volumes entered***. No balancing technique is used.

FSUTMS Model Year AADTs — Only the FSUTMS model year departure volumes [AADT*K*(1-D)] will be used to calculate the turning percentages first guess.

PROJECT TRAFFIC FOR Belle Terre Pkwy AT Whiteview Pkwy - PM

DESIGN HOUR TURNING MOVEMENTS IN YEAR 2015

Belle Terre Pkwy
(27000)
996
9.4% 94 | 84.2% 838 | 6.4% 64

Whiteview Pkwy - PM
65 44.3%
20 13.3% 147 (4200)
62 42.4%

(5400) 296
46.2% 137
22.5% 66
31.3% 93

Whiteview Pkwy - PM

79 5.7% | 1201 87.0% | 101 7.3%
1381
(26000)
Belle Terre Pkwy

(XXXXX)	2015 AADT
XXXX	2015 DDHV
K ML =	9.00%
K SS =	9.00%

D Factors
59.0% NB
41.0% SB
39.0% WB
61.0% EB

DESIGN HOUR TURNING MOVEMENTS IN YEAR 2020

Belle Terre Pkwy
(29000)
1082
9.7% 105 | 83.9% 908 | 6.4% 69

Whiteview Pkwy - PM
73 41.2%
25 14.4% 177 (5000)
79 44.4%

(6500) 355
43.2% 153
23.9% 85
32.9% 117

Whiteview Pkwy - PM

99 6.5% | 1300 85.4% | 123 8.1%
1522
(29000)
Belle Terre Pkwy

(XXXXX)	2020 AADT
XXXX	2020 DDHV
K ML =	9.00%
K SS =	9.00%

D Factors
59.0% NB
41.0% SB
39.0% WB
61.0% EB

DESIGN HOUR TURNING MOVEMENTS IN YEAR 2025

Belle Terre Pkwy
(32000)
1169
10.2% 119 | 83.2% 973 | 6.6% 77

Whiteview Pkwy - PM
83 40.1%
31 15.3% 206 (5900)
92 44.6%

(7500) 414
42.0% 174
25.0% 103
33.0% 137

Whiteview Pkwy - PM

116 7.0% | 1405 84.4% | 143 8.6%
1664
(31000)
Belle Terre Pkwy

(XXXXX)	2025 AADT
XXXX	2025 DDHV
K ML =	9.00%
K SS =	9.00%

D Factors
59.0% NB
41.0% SB
39.0% WB
61.0% EB

DESIGN HOUR TURNING MOVEMENTS IN YEAR 2030

Belle Terre Pkwy
(34000)
1255
10.5% 132 | 83.0% 1041 | 6.5% 82

Whiteview Pkwy - PM
89 37.9%
38 16.2% 235 (6700)
108 45.9%

(8600) 472
40.1% 189
25.6% 121
34.3% 162

Whiteview Pkwy - PM

139 7.7% | 1502 83.2% | 164 9.1%
1805
(34000)
Belle Terre Pkwy

(XXXXX)	2030 AADT
XXXX	2030 DDHV
K ML =	9.00%
K SS =	9.00%

D Factors
59.0% NB
41.0% SB
39.0% WB
61.0% EB

PROJECT TRAFFIC FOR Belle Terre Pkwy AT Whiteview Pkwy - PM

2015 INPUT TMCs COMPARED TO 2015 DHV

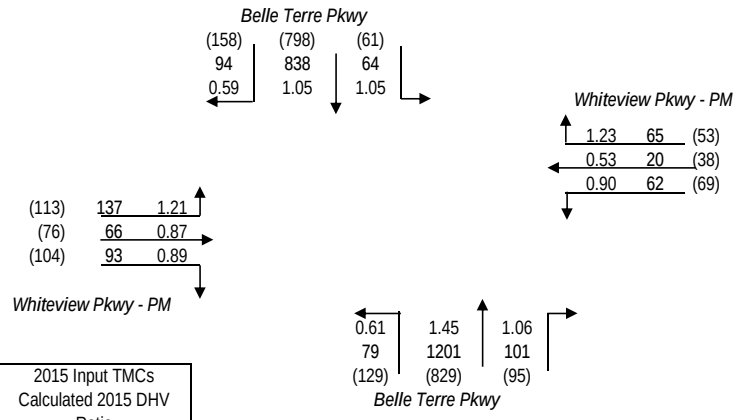

(XXX)	2015 Input TMCs
XXX	Calculated 2015 DHV
X.XX	Ratio

2015 INPUT TMCs COMPARED TO 2020 DHV

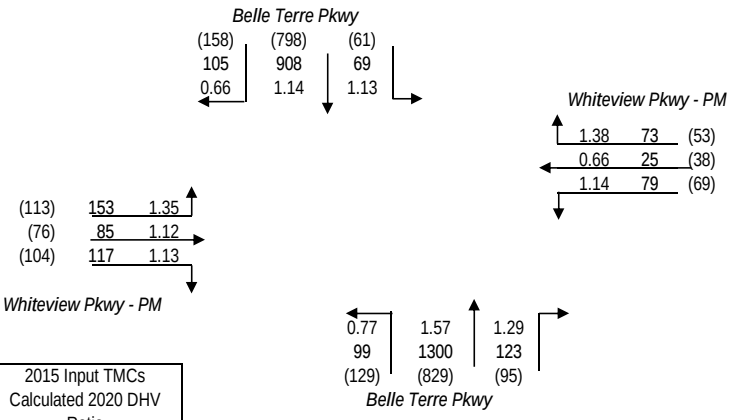

(XXX)	2015 Input TMCs
XXX	Calculated 2020 DHV
X.XX	Ratio

2015 INPUT TMCs COMPARED TO 2025 DHV

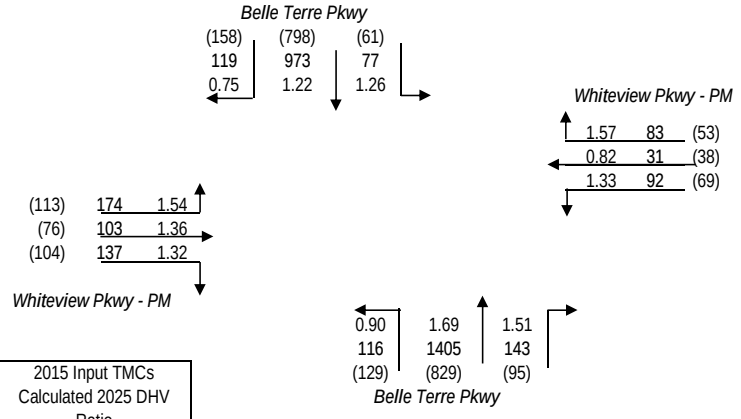

(XXX)	2015 Input TMCs
XXX	Calculated 2025 DHV
X.XX	Ratio

2015 INPUT TMCs COMPARED TO 2030 DHV

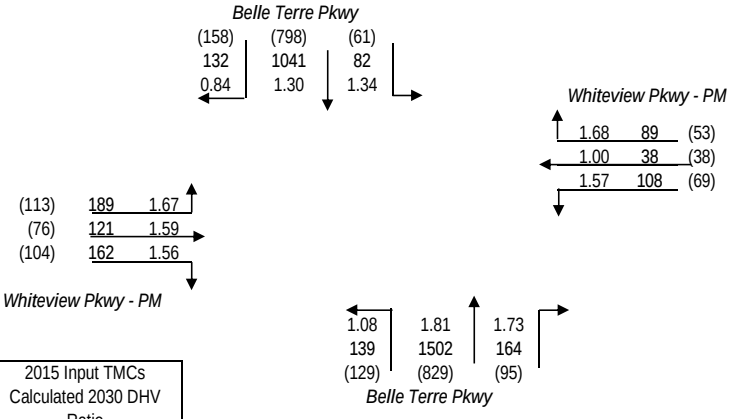

(XXX)	2015 Input TMCs
XXX	Calculated 2030 DHV
X.XX	Ratio

TURNS5 ANALYSIS SHEET - INPUT

Analyst:	-
Date:	13-Nov-15
Highway:	Belle Terre Pkwy
Intersection:	Whippoorwill Dr - PM
Project:	Belle Terre Blvd/Pkwy Intersection Analysis
County:	Flagler

Is this a 4 way intersection?

- ○ Yes, my intersection has four approaches

If not, which 3 approaches exist in the intersection?

- ○ EB, WB, and SB
- ○ EB, WB, and NB
- ◉ EB, SB, and NB
- ○ WB, SB, and NB

Is the Mainline Oriented North/South? Enter Yes or No: ◉ Yes ○ No

K Factors	
Mainline	9.00%
Side street	9.00%

D Factors	
Mainline	
Northbound (NB)	41.0%
Southbound (SB)	59.0%
Side street	
Westbound (WB)	0.0%
Eastbound (EB)	39.0%

Do you have FTSUTMS Model Year traffic from which you would like to interpolate/extrapolate for project years? (Y/N)

Enter Yes or No: ◉ Yes ○ No

If "Yes" go to cell C47 — If "No" go to cell C31

Enter Year and Growth Rates from Base Year:

	Year	*Rate* (1.0% = 0.01) Mainline	Side Street
Base	2015	0.00%	0.00%
Opening	2025		
Mid	2035		
Design	2045		

Mainline Growth Function: ◉ Linear ○ Exponential ○ Decaying

Side Street Growth Function: ◉ Linear ○ Exponential ○ Decaying

Enter Base Year AADTs for Volume Comparison:
(growth rates are used to calculate other project years)

From West: EB Approach	*From East: WB Approach*	*From North: SB Approach*	*From South: NB Approach*	***TOTAL***
0	0	0	0	0

Enter Project and Model Years

	Year
Base	2015
Opening	2020
Mid	2025
Design	2030
Model	2030

Enter Base and Model Year AADTs for Volume Comparison:
(volumes for other project years are calculated by interpolation)

	From West: EB Approach	*From East: WB Approach*	*From North: SB Approach*	*From South: NB Approach*	***TOTAL***
2015	2433	0	27000	27000	56433
2030	3100	0	34500	34000	71600

First Guess Turning % Option Used
Existing Turning Movement Counts

		1st Guess Turning %'s for AADT Balancing	**Actual/Counted Traffic for 2015**
(EB LT)	*West-to-North*	56.1%	46
(EB THRU)	*West-to-East*	0.0%	0
(EB RT)	*West-to-South*	43.9%	36
(WB LT)	*East-to-South*	0.0%	0
(WB THRU)	*East-to-West*	0.0%	0
(WB RT)	*East-to-North*	0.0%	0
(SB LT)	*North-to-East*	0.0%	0
(SB THRU)	*North-to-South*	94.7%	981
(SB RT)	*North-to-West*	5.3%	55
(NB LT)	*South-to-West*	8.2%	82
(NB THRU)	*South-to-North*	91.8%	913
(NB RT)	*South-to-East*	0.0%	0

Desired Closure: 1.00

Existing Year AADTs — Only the existing year total departure volumes [AADT*K*(1-D)] will be used to calculate the turning percentages first guess.

Existing Turning Movement Counts — The turning percentages first guess is the same as the ***actual distribution of turning volumes entered***. No balancing technique is used.

FSUTMS Model Year AADTs — Only the FSUTMS model year departure volumes [AADT*K*(1-D)] will be used to calculate the turning percentages first guess.

PROJECT TRAFFIC FOR Belle Terre Pkwy AT Whippoorwill Dr - PM

DESIGN HOUR TURNING MOVEMENTS IN YEAR 2015

Belle Terre Pkwy
(27000)
1434

4.4% 63 | 95.6% 1371 | 0.0% 0

Whippoorwill Dr - PM
0 0.0%
0 0.0% 0 0
0 0.0%

56.3% 48
(2400) 85 0.0% 0
43.7% 37

Whippoorwill Dr - PM

68 | 928 | 0
6.8% | 93.2% | 0.0%
996
(27000)
Belle Terre Pkwy

(XXXXX)	2015 AADT	
XXXX	2015 DDHV	
K ML =	9.00%	
K SS =	9.00%	

D Factors
41.0% NB
59.0% SB
39.0% EB

DESIGN HOUR TURNING MOVEMENTS IN YEAR 2020

Belle Terre Pkwy
(30000)
1566

4.4% 69 | 95.6% 1497 | 0.0% 0

Whippoorwill Dr - PM
0 0.0%
0 0.0% 0 0
0 0.0%

56.6% 53
(2700) 93 0.0% 0
43.4% 40

Whippoorwill Dr - PM

74 | 1008 | 0
6.8% | 93.2% | 0.0%
1082
(29000)
Belle Terre Pkwy

(XXXXX)	2020 AADT	
XXXX	2020 DDHV	
K ML =	9.00%	
K SS =	9.00%	

D Factors
41.0% NB
59.0% SB
39.0% EB

DESIGN HOUR TURNING MOVEMENTS IN YEAR 2025

Belle Terre Pkwy
(32000)
1699

4.5% 76 | 95.5% 1623 | 0.0% 0

Whippoorwill Dr - PM
0 0.0%
0 0.0% 0 0
0 0.0%

56.8% 57
(2900) 101 0.0% 0
43.2% 44

Whippoorwill Dr - PM

79 | 1090 | 0
6.8% | 93.2% | 0.0%
1169
(32000)
Belle Terre Pkwy

(XXXXX)	2025 AADT	
XXXX	2025 DDHV	
K ML =	9.00%	
K SS =	9.00%	

D Factors
41.0% NB
59.0% SB
39.0% EB

DESIGN HOUR TURNING MOVEMENTS IN YEAR 2030

Belle Terre Pkwy
(35000)
1832

4.4% 81 | 95.6% 1751 | 0.0% 0

Whippoorwill Dr - PM
0 0.0%
0 0.0% 0 0
0 0.0%

55.9% 61
(3100) 109 0.0% 0
44.1% 48

Whippoorwill Dr - PM

87 | 1168 | 0
6.9% | 93.1% | 0.0%
1255
(34000)
Belle Terre Pkwy

(XXXXX)	2030 AADT	
XXXX	2030 DDHV	
K ML =	9.00%	
K SS =	9.00%	

D Factors
41.0% NB
59.0% SB
39.0% EB

PROJECT TRAFFIC FOR Belle Terre Pkwy AT Whippoorwill Dr - PM

2015 INPUT TMCs COMPARED TO 2015 DHV

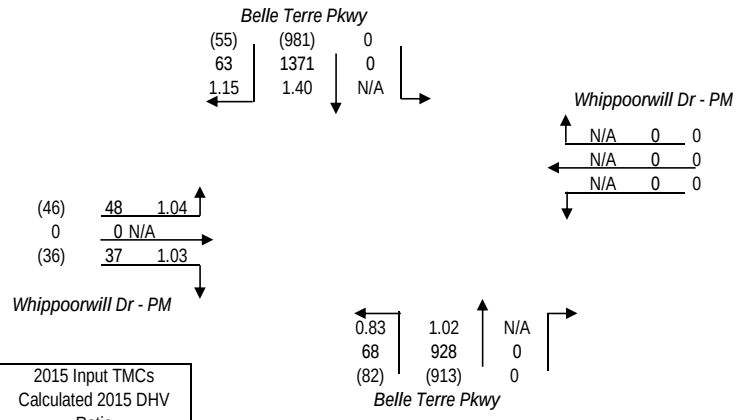

(XXX)	2015 Input TMCs
XXX	Calculated 2015 DHV
X.XX	Ratio

2015 INPUT TMCs COMPARED TO 2020 DHV

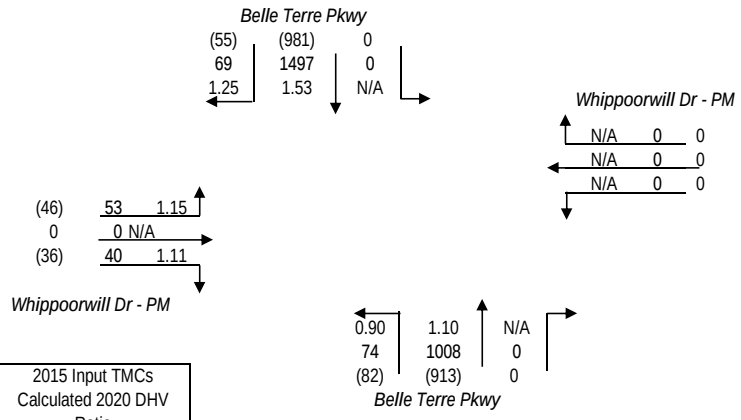

(XXX)	2015 Input TMCs
XXX	Calculated 2020 DHV
X.XX	Ratio

2015 INPUT TMCs COMPARED TO 2025 DHV

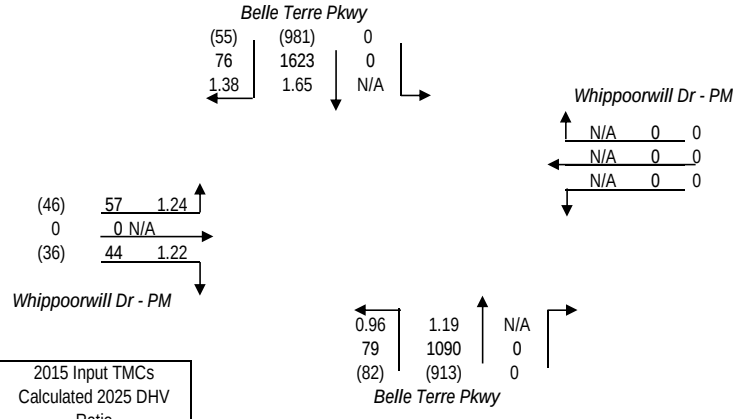

(XXX)	2015 Input TMCs
XXX	Calculated 2025 DHV
X.XX	Ratio

2015 INPUT TMCs COMPARED TO 2030 DHV

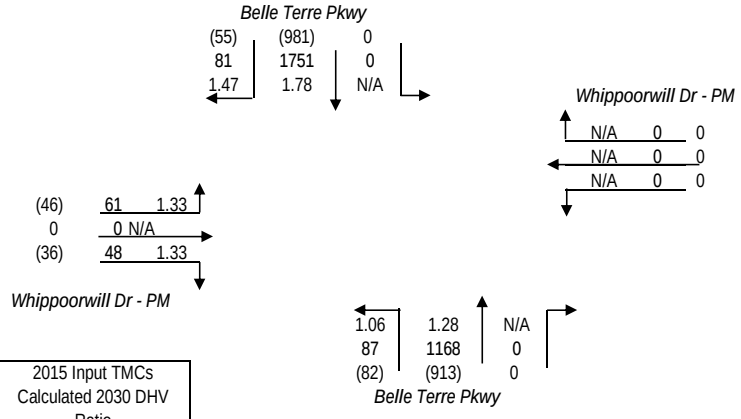

(XXX)	2015 Input TMCs
XXX	Calculated 2030 DHV
X.XX	Ratio

TURNS5 ANALYSIS SHEET - INPUT

Analyst:	-
Date:	13-Nov-15
Highway:	Belle Terre Pkwy
Intersection:	Pritchard Dr - PM
Project:	Belle Terre Blvd/Pkwy Intersection Analysis
County:	Flagler

Is this a 4 way intersection?

- ○ Yes, my intersection has four approaches

If not, which 3 approaches exist in the intersection?

- ○ EB, WB, and SB
- ○ EB, WB, and NB
- ○ EB, SB, and NB
- ◉ WB, SB, and NB

Is the Mainline Oriented North/South? (Enter Yes or No)

- ◉ Yes
- ○ No

K Factors	Mainline	**D Factors**	*Mainline*
	9.00%	Northbound (NB)	41.0%
	Side street	Southbound (SB)	59.0%
	9.00%		*Side street*
		Westbound (WB)	39.0%
		Eastbound (EB)	0.0%

Do you have FTSUTMS Model Year traffic from which you would like to interpolate/extrapolate for project years? (Y/N) (Enter Yes or No)

- ◉ Yes
- ○ No

If "Yes" go to cell C47 — If "No" go to cell C31

Enter Year and Growth Rates from Base Year:

	Year	*Rate* (1.0% = 0.01) Mainline	Side Street
Base	2015	0.00%	0.00%
Opening	2025		
Mid	2035		
Design	2045		

Mainline Growth Function
- ◉ Linear
- ○ Exponential
- ○ Decaying

Side Street Growth Function
- ◉ Linear
- ○ Exponential
- ○ Decaying

Enter Base Year AADTs for Volume Comparison:
(growth rates are used to calculate other project years)

From West: EB Approach	*From East: WB Approach*	*From North: SB Approach*	*From South: NB Approach*	***TOTAL***
0	0	0	0	0

Enter Project and Model Years

	Year
Base	2015
Opening	2020
Mid	2025
Design	2030
Model	2030

Enter Base and Model Year AADTs for Volume Comparison:
(volumes for other project years are calculated by interpolation)

	From West: EB Approach	*From East: WB Approach*	*From North: SB Approach*	*From South: NB Approach*	***TOTAL***
2015	0	3533	27000	27000	57533
2030	0	4500	35000	34500	74000

		1st Guess Turning %'s for AADT Balancing	**Actual/Counted Traffic for 2015**
(EB LT)	*West-to-North*	0.0%	0
(EB THRU)	*West-to-East*	0.0%	0
(EB RT)	*West-to-South*	0.0%	0
(WB LT)	*East-to-South*	25.4%	30
(WB THRU)	*East-to-West*	0.0%	0
(WB RT)	*East-to-North*	74.6%	88
(SB LT)	*North-to-East*	11.6%	132
(SB THRU)	*North-to-South*	88.4%	1006
(SB RT)	*North-to-West*	0.0%	0
(NB LT)	*South-to-West*	0.0%	0
(NB THRU)	*South-to-North*	92.9%	891
(NB RT)	*South-to-East*	7.1%	68

Desired Closure: 2.50

Existing Year AADTs

Existing Turning Movement Counts

FSUTMS Model Year AADTs

First Guess Turning % Option Used
Existing Turning Movement Counts

Only the existing year total departure volumes [AADT*K*(1-D)] will be used to calculate the turning percentages first guess.

The turning percentages first guess is the same as the ***actual distribution of turning volumes entered***. No balancing technique is used.

Only the FSUTMS model year departure volumes [AADT*K*(1-D)] will be used to calculate the turning percentages first guess.

PROJECT TRAFFIC FOR Belle Terre Pkwy AT Pritchard Dr - PM

DESIGN HOUR TURNING MOVEMENTS IN YEAR 2015

Belle Terre Pkwy
(27000)
1434

0.0%	91.1%	8.9%
0	1306	128

Pritchard Dr - PM

90	72.2%	
0	0.0%	124 (3500)
34	27.8%	

0.0%	0	
0	0.0%	0
0.0%	0	

Pritchard Dr - PM

0	936	60
0.0%	94.0%	6.0%

996
(27000)
Belle Terre Pkwy

(XXXXX)	2015 AADT
XXXX	2015 DDHV
K ML =	9.00%
K SS =	9.00%

D Factors
41.0% NB
59.0% SB
39.0% WB

DESIGN HOUR TURNING MOVEMENTS IN YEAR 2020

Belle Terre Pkwy
(30000)
1575

0.0%	91.1%	8.9%
0	1435	140

Pritchard Dr - PM

98	72.5%	
0	0.0%	135 (3900)
37	27.5%	

0.0%	0	
0	0.0%	0
0.0%	0	

Pritchard Dr - PM

0	1024	65
0.0%	94.0%	6.0%

1089
(30000)
Belle Terre Pkwy

(XXXXX)	2020 AADT
XXXX	2020 DDHV
K ML =	9.00%
K SS =	9.00%

D Factors
41.0% NB
59.0% SB
39.0% WB

DESIGN HOUR TURNING MOVEMENTS IN YEAR 2025

Belle Terre Pkwy
(32000)
1717

0.0%	91.1%	8.9%
0	1564	153

Pritchard Dr - PM

107	72.7%	
0	0.0%	147 (4200)
40	27.3%	

0.0%	0	
0	0.0%	0
0.0%	0	

Pritchard Dr - PM

0	1111	70
0.0%	94.1%	5.9%

1181
(32000)
Belle Terre Pkwy

(XXXXX)	2025 AADT
XXXX	2025 DDHV
K ML =	9.00%
K SS =	9.00%

D Factors
41.0% NB
59.0% SB
39.0% WB

DESIGN HOUR TURNING MOVEMENTS IN YEAR 2030

Belle Terre Pkwy
(35000)
1859

0.0%	93.2%	6.8%
0	1733	126

Pritchard Dr - PM

89	56.1%	
0	0.0%	158 (4500)
69	43.9%	

0.0%	0	
0	0.0%	0
0.0%	0	

Pritchard Dr - PM

0	1160	113
0.0%	91.1%	8.9%

1273
(35000)
Belle Terre Pkwy

(XXXXX)	2030 AADT
XXXX	2030 DDHV
K ML =	9.00%
K SS =	9.00%

D Factors
41.0% NB
59.0% SB
39.0% WB

PROJECT TRAFFIC FOR Belle Terre Pkwy AT Pritchard Dr - PM

2015 INPUT TMCs COMPARED TO 2015 DHV

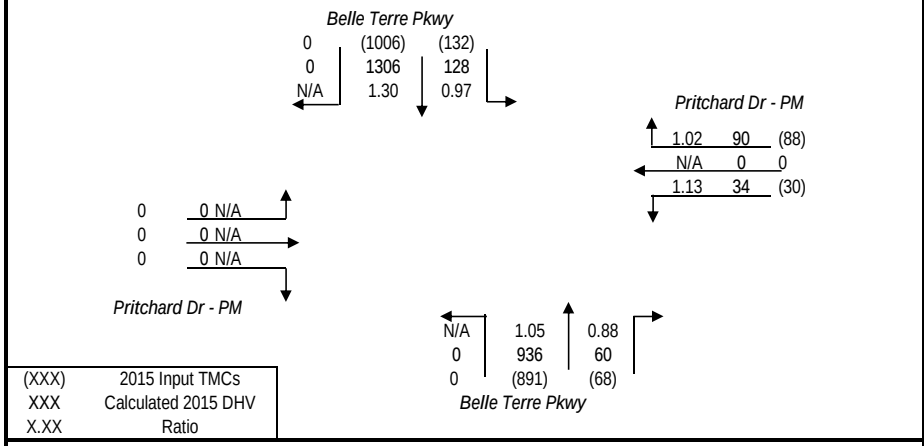

2015 INPUT TMCs COMPARED TO 2020 DHV

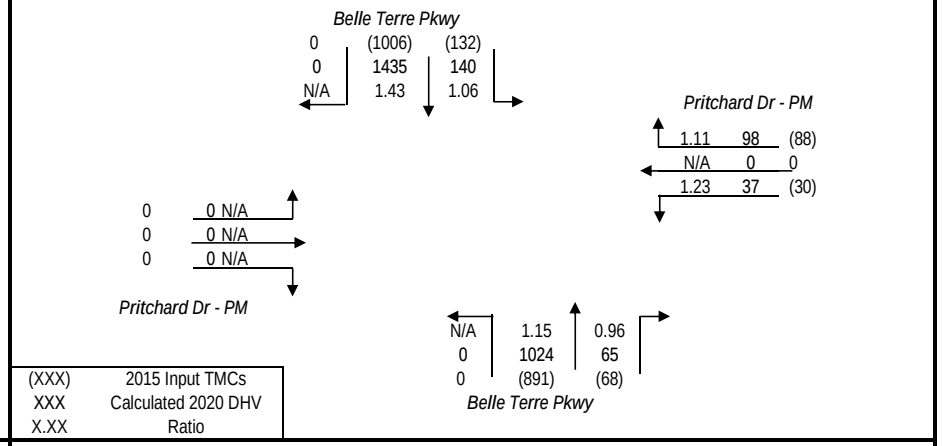

2015 INPUT TMCs COMPARED TO 2025 DHV

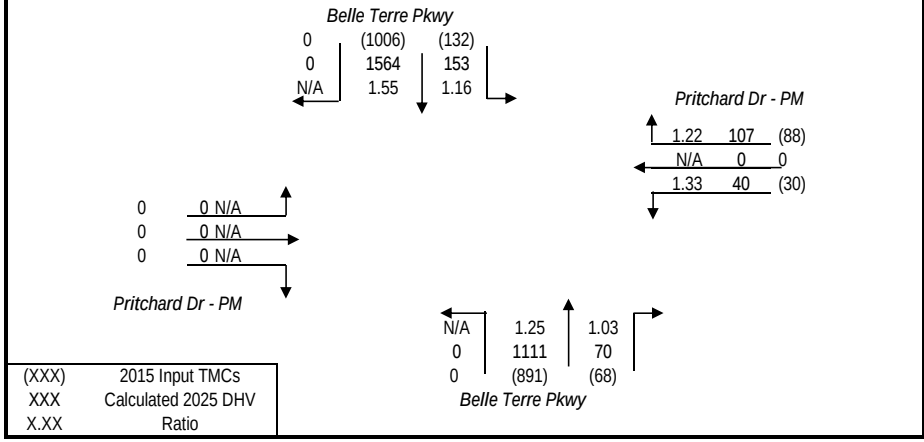

2015 INPUT TMCs COMPARED TO 2030 DHV

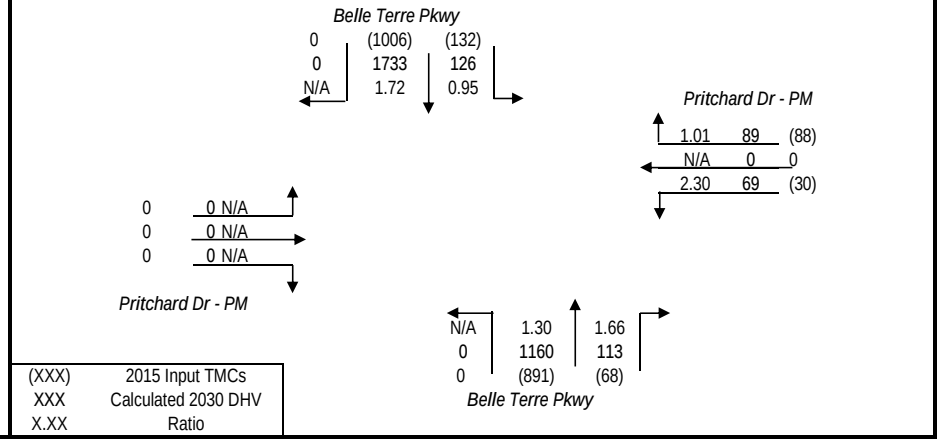

TURNS5 ANALYSIS SHEET - INPUT

Analyst: -
Date: 13-Nov-15
Highway: Belle Terre Pkwy
Intersection: School Entrance- PM
Project: Belle Terre Blvd/Pkwy Intersection Analysis
County: Flagler

Is this a 4 way intersection?
- ○ Yes, my intersection has four approaches

If not, which 3 approaches exist in the intersection?
- ○ EB, WB, and SB
- ○ EB, WB, and NB
- ○ EB, SB, and NB
- ◉ WB, SB, and NB

Is the Mainline Oriented North/South? (Enter Yes or No)
- ◉ Yes
- ○ No

K Factors	
Mainline	9.00%
Side street	9.00%

D Factors	*Mainline*
Northbound (NB)	41.0%
Southbound (SB)	59.0%
	Side street
Westbound (WB)	61.0%
Eastbound (EB)	0.0%

Do you have FTSUTMS Model Year traffic from which you would like to interpolate/extrapolate for project years? (Y/N) (Enter Yes or No)
- ◉ Yes
- ○ No

If "Yes" go to cell C47 — If "No" go to cell C31

Enter Year and Growth Rates from Base Year:

	Year	*Rate* (1.0% = 0.01) **Mainline**	**Side Street**
Base	2015	0.00%	0.00%
Opening	2025		
Mid	2035		
Design	2045		

Mainline Growth Function
- ◉ Linear
- ○ Exponential
- ○ Decaying

Side Street Growth Function
- ◉ Linear
- ○ Exponential
- ○ Decaying

Enter Base Year AADTs for Volume Comparison:
(growth rates are used to calculate other project years)

From West: EB Approach	*From East: WB Approach*	*From North: SB Approach*	*From South: NB Approach*	***TOTAL***
0	0	0	0	0

Enter Project and Model Years

	Year
Base	2015
Opening	2020
Mid	2025
Design	2030
Model	2030

Enter Base and Model Year AADTs for Volume Comparison:
(volumes for other project years are calculated by interpolation)

	From West: EB Approach	*From East: WB Approach*	*From North: SB Approach*	*From South: NB Approach*	***TOTAL***
2015	0	2289	27000	27000	56289
2030	0	2900	35000	35000	72900

		1st Guess Turning %'s for AADT Balancing	**Actual/Counted Traffic for 2015**
(EB LT)	*West-to-North*	0.0%	0
(EB THRU)	*West-to-East*	0.0%	0
(EB RT)	*West-to-South*	0.0%	0
(WB LT)	*East-to-South*	56.3%	27
(WB THRU)	*East-to-West*	0.0%	0
(WB RT)	*East-to-North*	43.7%	21
(SB LT)	*North-to-East*	1.7%	19
(SB THRU)	*North-to-South*	98.3%	1111
(SB RT)	*North-to-West*	0.0%	0
(NB LT)	*South-to-West*	0.0%	0
(NB THRU)	*South-to-North*	97.1%	951
(NB RT)	*South-to-East*	2.9%	28

Desired Closure: 1.00

Existing Year AADTs

Existing Turning Movement Counts

FSUTMS Model Year AADTs

First Guess Turning % Option Used
Existing Turning Movement Counts

Only the existing year total departure volumes [AADT*K*(1-D)] will be used to calculate the turning percentages first guess.

The turning percentages first guess is the same as the ***actual distribution of turning volumes entered***. No balancing technique is used.

Only the FSUTMS model year departure volumes [AADT*K*(1-D)] will be used to calculate the turning percentages first guess.

PROJECT TRAFFIC FOR Belle Terre Pkwy AT School Entrance- PM

DESIGN HOUR TURNING MOVEMENTS IN YEAR 2015

Belle Terre Pkwy
(27000)
1434

0.0% 0 | 97.4% 1397 | 2.6% 37

School Entrance- PM
55 43.8%
0 0.0% 126 (2300)
71 56.2%

0.0% 0
0 0 0.0% 0
0.0% 0

School Entrance- PM

0 | 952 | 44
0.0% | 95.6% | 4.4%
996
(27000)
Belle Terre Pkwy

(XXXXX)	2015 AADT
XXXX	2015 DDHV
K ML =	9.00%
K SS =	9.00%

D Factors
41.0% NB
59.0% SB
61.0% WB

DESIGN HOUR TURNING MOVEMENTS IN YEAR 2020

Belle Terre Pkwy
(30000)
1575

0.0% 0 | 97.4% 1534 | 2.6% 41

School Entrance- PM
60 43.8%
0 0.0% 137 (2500)
77 56.2%

0.0% 0
0 0 0.0% 0
0.0% 0

School Entrance- PM

0 | 1047 | 48
0.0% | 95.6% | 4.4%
1095
(30000)
Belle Terre Pkwy

(XXXXX)	2020 AADT
XXXX	2020 DDHV
K ML =	9.00%
K SS =	9.00%

D Factors
41.0% NB
59.0% SB
61.0% WB

DESIGN HOUR TURNING MOVEMENTS IN YEAR 2025

Belle Terre Pkwy
(32000)
1717

0.0% 0 | 97.4% 1672 | 2.6% 45

School Entrance- PM
65 43.9%
0 0.0% 148 (2700)
83 56.1%

0.0% 0
0 0 0.0% 0
0.0% 0

School Entrance- PM

0 | 1141 | 52
0.0% | 95.6% | 4.4%
1193
(32000)
Belle Terre Pkwy

(XXXXX)	2025 AADT
XXXX	2025 DDHV
K ML =	9.00%
K SS =	9.00%

D Factors
41.0% NB
59.0% SB
61.0% WB

DESIGN HOUR TURNING MOVEMENTS IN YEAR 2030

Belle Terre Pkwy
(35000)
1859

0.0% 0 | 97.4% 1811 | 2.6% 48

School Entrance- PM
70 43.9%
0 0.0% 159 (2900)
89 56.1%

0.0% 0
0 0 0.0% 0
0.0% 0

School Entrance- PM

0 | 1236 | 56
0.0% | 95.7% | 4.3%
1292
(35000)
Belle Terre Pkwy

(XXXXX)	2030 AADT
XXXX	2030 DDHV
K ML =	9.00%
K SS =	9.00%

D Factors
41.0% NB
59.0% SB
61.0% WB

PROJECT TRAFFIC FOR Belle Terre Pkwy AT School Entrance- PM

2015 INPUT TMCs COMPARED TO 2015 DHV

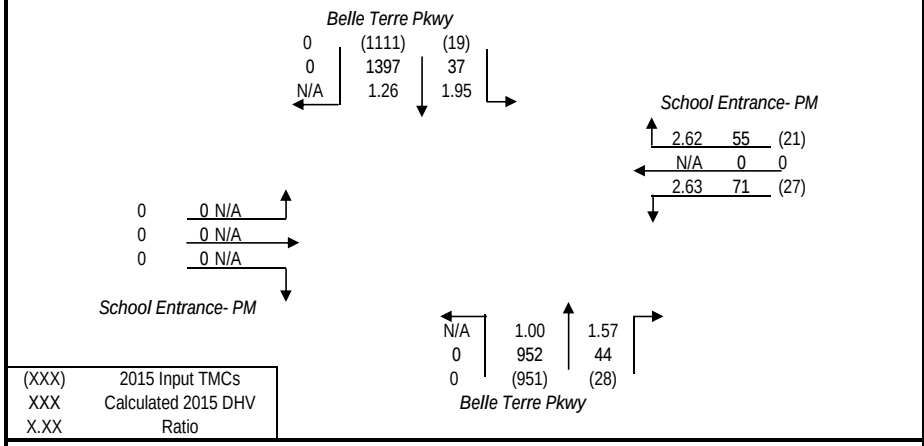

(XXX)	2015 Input TMCs
XXX	Calculated 2015 DHV
X.XX	Ratio

2015 INPUT TMCs COMPARED TO 2020 DHV

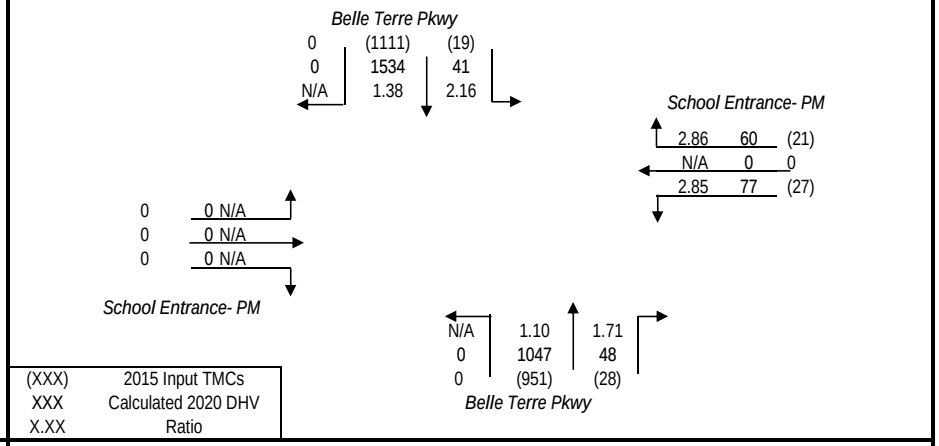

(XXX)	2015 Input TMCs
XXX	Calculated 2020 DHV
X.XX	Ratio

2015 INPUT TMCs COMPARED TO 2025 DHV

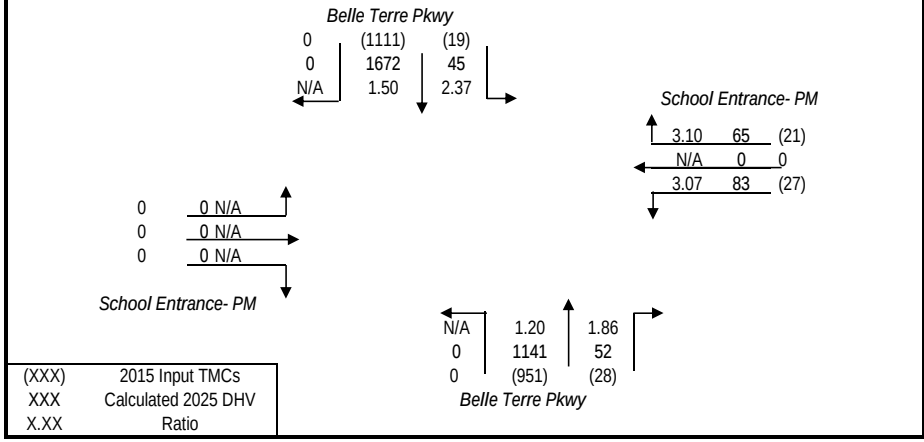

(XXX)	2015 Input TMCs
XXX	Calculated 2025 DHV
X.XX	Ratio

2015 INPUT TMCs COMPARED TO 2030 DHV

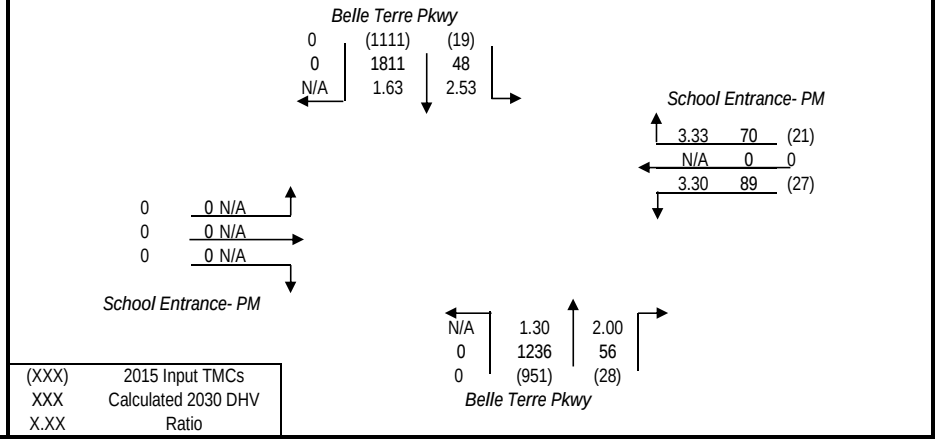

(XXX)	2015 Input TMCs
XXX	Calculated 2030 DHV
X.XX	Ratio

TURNS5 ANALYSIS SHEET - INPUT

Analyst:	-
Date:	13-Nov-15
Highway:	Belle Terre Pkwy
Intersection:	Parkview Dr (S) - PM
Project:	Belle Terre Blvd/Pkwy Intersection Analysis
County:	Flagler

Is this a 4 way intersection?

- ○ Yes, my intersection has four approaches

If not, which 3 approaches exist in the intersection?

- ○ EB, WB, and SB
- ○ EB, WB, and NB
- ○ EB, SB, and NB
- ◉ WB, SB, and NB

Is the Mainline Oriented North/South? (Enter Yes or No)

- ◉ Yes
- ○ No

K Factors	
Mainline	9.00%
Side street	9.00%

D Factors	*Mainline*
Northbound (NB)	41.0%
Southbound (SB)	59.0%
	Side street
Westbound (WB)	39.0%
Eastbound (EB)	0.0%

Do you have FTSUTMS Model Year traffic from which you would like to interpolate/extrapolate for project years? (Y/N) (Enter Yes or No)

- ◉ Yes
- ○ No

If "Yes" go to cell C47 — If "No" go to cell C31

Enter Year and Growth Rates from Base Year:

	Year	*Rate* (1.0% = 0.01) Mainline	Side Street
Base	2015	0.00%	0.00%
Opening	2025		
Mid	2035		
Design	2045		

Mainline Growth Function
- ◉ Linear
- ○ Exponential
- ○ Decaying

Side Street Growth Function
- ◉ Linear
- ○ Exponential
- ○ Decaying

Enter Base Year AADTs for Volume Comparison:
(growth rates are used to calculate other project years)

From West: EB Approach	*From East: WB Approach*	*From North: SB Approach*	*From South: NB Approach*	***TOTAL***
0	0	0	0	0

Enter Project and Model Years

	Year
Base	2015
Opening	2020
Mid	2025
Design	2030
Model	2030

Enter Base and Model Year AADTs for Volume Comparison:
(volumes for other project years are calculated by interpolation)

	From West: EB Approach	*From East: WB Approach*	*From North: SB Approach*	*From South: NB Approach*	***TOTAL***
2015	0	6667	27000	27000	60667
2030	0	8600	33000	35000	76600

First Guess Turning % Option Used
Existing Turning Movement Counts

		1st Guess Turning %'s for AADT Balancing	**Actual/Counted Traffic for 2015**
(EB LT)	*West-to-North*	0.0%	0
(EB THRU)	*West-to-East*	0.0%	0
(EB RT)	*West-to-South*	0.0%	0
(WB LT)	*East-to-South*	55.1%	124
(WB THRU)	*East-to-West*	0.0%	0
(WB RT)	*East-to-North*	44.9%	101
(SB LT)	*North-to-East*	11.9%	136
(SB THRU)	*North-to-South*	88.1%	1006
(SB RT)	*North-to-West*	0.0%	0
(NB LT)	*South-to-West*	0.0%	0
(NB THRU)	*South-to-North*	85.0%	826
(NB RT)	*South-to-East*	15.0%	146

Desired Closure: 4.50

Existing Year AADTs

Only the existing year total departure volumes [AADT*K*(1-D)] will be used to calculate the turning percentages first guess.

Existing Turning Movement Counts

The turning percentages first guess is the same as the ***actual distribution of turning volumes entered***. No balancing technique is used.

FSUTMS Model Year AADTs

Only the FSUTMS model year departure volumes [AADT*K*(1-D)] will be used to calculate the turning percentages first guess.

PROJECT TRAFFIC FOR Belle Terre Pkwy AT Parkview Dr (S) - PM

DESIGN HOUR TURNING MOVEMENTS IN YEAR 2015

Belle Terre Pkwy
(27000)
1434

0.0% 0 | 87.0% 1248 | 13.0% 186

Parkview Dr (S) - PM
106 45.3%
0 0.0% 234 (6700)
128 54.7%

0.0% 0
0 0 0.0% 0
0.0% 0

Parkview Dr (S) - PM

0 | 835 | 161
0.0% | 83.8% | 16.2%
996
(27000)
Belle Terre Pkwy

(XXXXX)	2015 AADT
XXXX	2015 DDHV
K ML =	9.00%
K SS =	9.00%

D Factors
41.0% NB
59.0% SB
39.0% WB

DESIGN HOUR TURNING MOVEMENTS IN YEAR 2020

Belle Terre Pkwy
(29000)
1540

0.0% 0 | 87.1% 1341 | 12.9% 199

Parkview Dr (S) - PM
114 44.2%
0 0.0% 257 (7300)
143 55.8%

0.0% 0
0 0 0.0% 0
0.0% 0

Parkview Dr (S) - PM

0 | 913 | 182
0.0% | 83.4% | 16.6%
1095
(30000)
Belle Terre Pkwy

(XXXXX)	2020 AADT
XXXX	2020 DDHV
K ML =	9.00%
K SS =	9.00%

D Factors
41.0% NB
59.0% SB
39.0% WB

DESIGN HOUR TURNING MOVEMENTS IN YEAR 2025

Belle Terre Pkwy
(31000)
1646

0.0% 0 | 87.2% 1435 | 12.8% 211

Parkview Dr (S) - PM
121 43.3%
0 0.0% 279 (8000)
158 56.7%

0.0% 0
0 0 0.0% 0
0.0% 0

Parkview Dr (S) - PM

0 | 990 | 203
0.0% | 83.0% | 17.0%
1193
(32000)
Belle Terre Pkwy

(XXXXX)	2025 AADT
XXXX	2025 DDHV
K ML =	9.00%
K SS =	9.00%

D Factors
41.0% NB
59.0% SB
39.0% WB

DESIGN HOUR TURNING MOVEMENTS IN YEAR 2030

Belle Terre Pkwy
(33000)
1752

0.0% 0 | 90.3% 1582 | 9.7% 170

Parkview Dr (S) - PM
92 30.3%
0 0.0% 302 (8600)
210 69.7%

0.0% 0
0 0 0.0% 0
0.0% 0

Parkview Dr (S) - PM

0 | 1023 | 269
0.0% | 79.2% | 20.8%
1292
(35000)
Belle Terre Pkwy

(XXXXX)	2030 AADT
XXXX	2030 DDHV
K ML =	9.00%
K SS =	9.00%

D Factors
41.0% NB
59.0% SB
39.0% WB

PROJECT TRAFFIC FOR Belle Terre Pkwy AT Parkview Dr (S) - PM

2015 INPUT TMCs COMPARED TO 2015 DHV

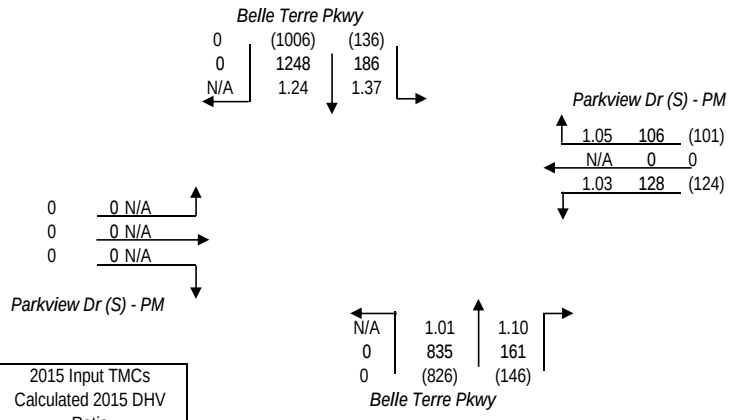

(XXX)	2015 Input TMCs
XXX	Calculated 2015 DHV
X.XX	Ratio

2015 INPUT TMCs COMPARED TO 2020 DHV

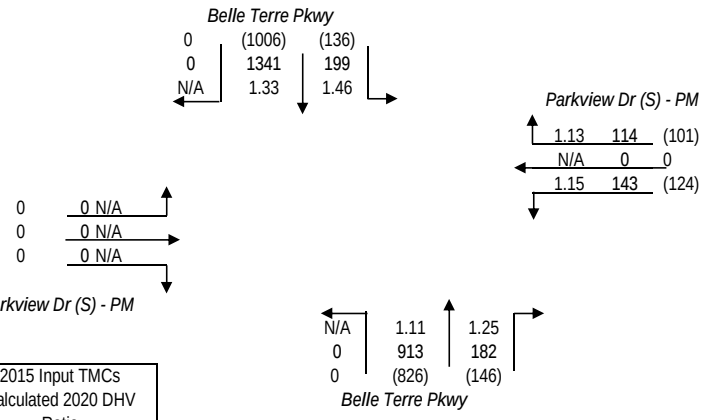

(XXX)	2015 Input TMCs
XXX	Calculated 2020 DHV
X.XX	Ratio

2015 INPUT TMCs COMPARED TO 2025 DHV

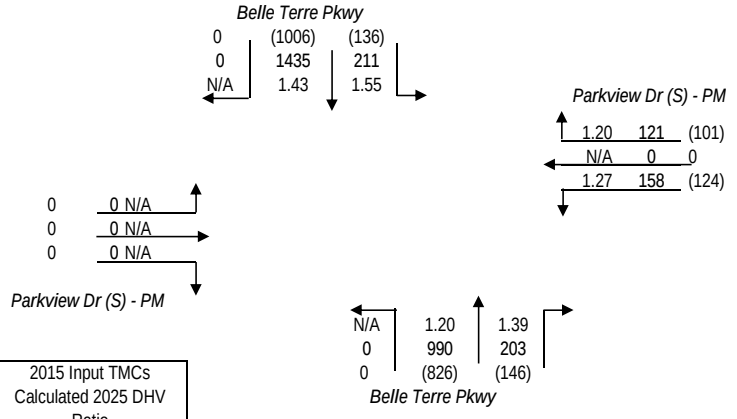

(XXX)	2015 Input TMCs
XXX	Calculated 2025 DHV
X.XX	Ratio

2015 INPUT TMCs COMPARED TO 2030 DHV

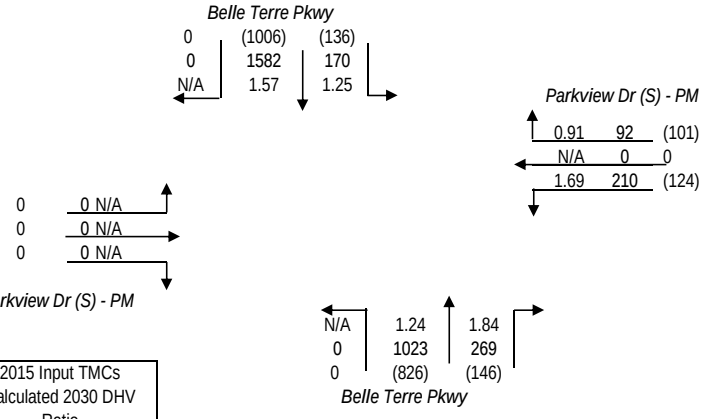

(XXX)	2015 Input TMCs
XXX	Calculated 2030 DHV
X.XX	Ratio

TURNS5 ANALYSIS SHEET - INPUT

Analyst:	-
Date:	13-Nov-15
Highway:	Belle Terre Pkwy
Intersection:	Parkview Dr (N) - PM
Project:	Belle Terre Blvd/Pkwy Intersection Analysis
County:	Flagler

Is this a 4 way intersection?

- ○ Yes, my intersection has four approaches

If not, which 3 approaches exist in the intersection?

- ○ EB, WB, and SB
- ○ EB, WB, and NB
- ○ EB, SB, and NB
- ◉ WB, SB, and NB

Is the Mainline Oriented North/South? Enter Yes or No

- ◉ Yes
- ○ No

K Factors	
Mainline	9.00%
Side street	9.00%

D Factors	*Mainline*
Northbound (NB)	41.0%
Southbound (SB)	59.0%
	Side street
Westbound (WB)	39.0%
Eastbound (EB)	0.0%

Do you have FTSUTMS Model Year traffic from which you would like to interpolate/extrapolate for project years? (Y/N)

Enter Yes or No

- ◉ Yes
- ○ No

If "Yes" go to cell C47 — If "No" go to cell C31

Enter Year and Growth Rates from Base Year:

	Year	*Rate* (1.0% = 0.01) Mainline	Side Street
Base	2015	0.00%	0.00%
Opening	2025		
Mid	2035		
Design	2045		

Mainline Growth Function

- ◉ Linear
- ○ Exponential
- ○ Decaying

Side Street Growth Function

- ◉ Linear
- ○ Exponential
- ○ Decaying

Enter Base Year AADTs for Volume Comparison:
(growth rates are used to calculate other project years)

From West: EB Approach	*From East: WB Approach*	*From North: SB Approach*	*From South: NB Approach*	***TOTAL***
0	0	0	0	0

Enter Project and Model Years

	Year
Base	2015
Opening	2020
Mid	2025
Design	2030
Model	2030

Enter Base and Model Year AADTs for Volume Comparison:
(volumes for other project years are calculated by interpolation)

	From West: EB Approach	*From East: WB Approach*	*From North: SB Approach*	*From South: NB Approach*	***TOTAL***
2015	0	3433	25000	27000	55433
2030	0	4400	32000	33000	69400

First Guess Turning % Option Used
Existing Turning Movement Counts

		1st Guess Turning %'s for AADT Balancing	**Actual/Counted Traffic for 2015**
(EB LT)	*West-to-North*	0.0%	0
(EB THRU)	*West-to-East*	0.0%	0
(EB RT)	*West-to-South*	0.0%	0
(WB LT)	*East-to-South*	17.5%	22
(WB THRU)	*East-to-West*	0.0%	0
(WB RT)	*East-to-North*	82.5%	104
(SB LT)	*North-to-East*	13.0%	167
(SB THRU)	*North-to-South*	87.0%	1120
(SB RT)	*North-to-West*	0.0%	0
(NB LT)	*South-to-West*	0.0%	0
(NB THRU)	*South-to-North*	98.3%	911
(NB RT)	*South-to-East*	1.7%	16

Desired Closure: 6.50

Existing Year AADTs

Only the existing year total departure volumes [AADT*K*(1-D)] will be used to calculate the turning percentages first guess.

Existing Turning Movement Counts

The turning percentages first guess is the same as the ***actual distribution of turning volumes entered***. No balancing technique is used.

FSUTMS Model Year AADTs

Only the FSUTMS model year departure volumes [AADT*K*(1-D)] will be used to calculate the turning percentages first guess.

PROJECT TRAFFIC FOR Belle Terre Pkwy AT Parkview Dr (N) - PM

DESIGN HOUR TURNING MOVEMENTS IN YEAR 2015

Belle Terre Pkwy
(25000)
1328

0.0% 0 | 89.2% 1185 | 10.8% 143

Parkview Dr (N) - PM
92 76.8%
0 0.0% 120 (3400)
28 23.2%

0.0% 0
0 0 0.0% 0
0.0% 0

Parkview Dr (N) - PM

0 | 976 | 20
0.0% | 98.0% | 2.0%
996
(27000)
Belle Terre Pkwy

(XXXXX)	2015 AADT
XXXX	2015 DDHV
K ML =	9.00%
K SS =	9.00%

D Factors
41.0% NB
59.0% SB
39.0% WB

DESIGN HOUR TURNING MOVEMENTS IN YEAR 2020

Belle Terre Pkwy
(27000)
1451

0.0% 0 | 88.9% 1290 | 11.1% 161

Parkview Dr (N) - PM
102 77.4%
0 0.0% 132 (3800)
30 22.6%

0.0% 0
0 0 0.0% 0
0.0% 0

Parkview Dr (N) - PM

0 | 1050 | 20
0.0% | 98.1% | 1.9%
1070
(29000)
Belle Terre Pkwy

(XXXXX)	2020 AADT
XXXX	2020 DDHV
K ML =	9.00%
K SS =	9.00%

D Factors
41.0% NB
59.0% SB
39.0% WB

DESIGN HOUR TURNING MOVEMENTS IN YEAR 2025

Belle Terre Pkwy
(30000)
1575

0.0% 0 | 88.8% 1399 | 11.2% 176

Parkview Dr (N) - PM
111 77.9%
0 0.0% 143 (4100)
32 22.1%

0.0% 0
0 0 0.0% 0
0.0% 0

Parkview Dr (N) - PM

0 | 1122 | 22
0.0% | 98.1% | 1.9%
1144
(31000)
Belle Terre Pkwy

(XXXXX)	2025 AADT
XXXX	2025 DDHV
K ML =	9.00%
K SS =	9.00%

D Factors
41.0% NB
59.0% SB
39.0% WB

DESIGN HOUR TURNING MOVEMENTS IN YEAR 2030

Belle Terre Pkwy
(32000)
1699

0.0% 0 | 88.7% 1507 | 11.3% 192

Parkview Dr (N) - PM
118 76.9%
0 0.0% 154 (4400)
36 23.1%

0.0% 0
0 0 0.0% 0
0.0% 0

Parkview Dr (N) - PM

0 | 1194 | 24
0.0% | 98.0% | 2.0%
1218
(33000)
Belle Terre Pkwy

(XXXXX)	2030 AADT
XXXX	2030 DDHV
K ML =	9.00%
K SS =	9.00%

D Factors
41.0% NB
59.0% SB
39.0% WB

PROJECT TRAFFIC FOR Belle Terre Pkwy AT Parkview Dr (N) - PM

2015 INPUT TMCs COMPARED TO 2015 DHV

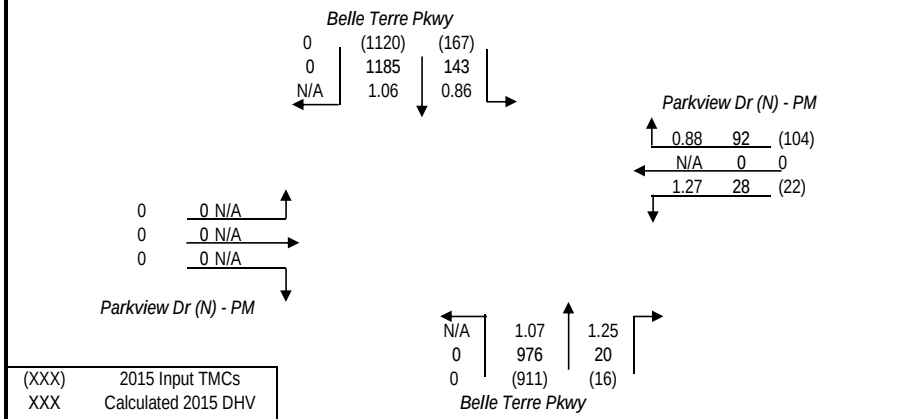

2015 INPUT TMCs COMPARED TO 2020 DHV

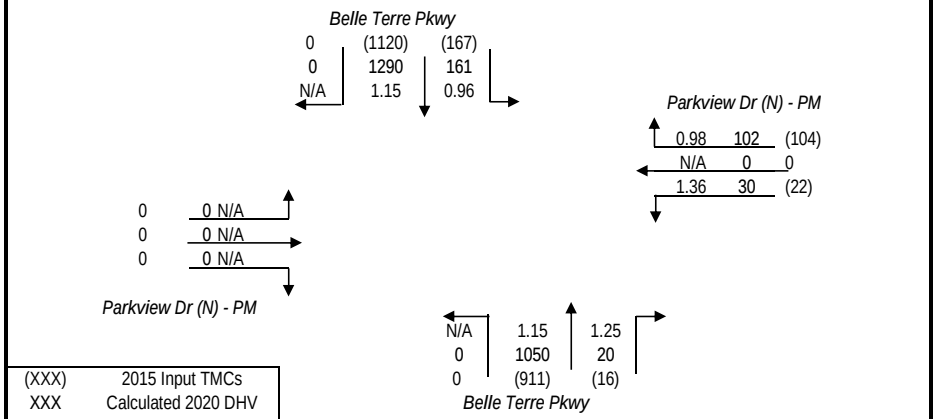

2015 INPUT TMCs COMPARED TO 2025 DHV

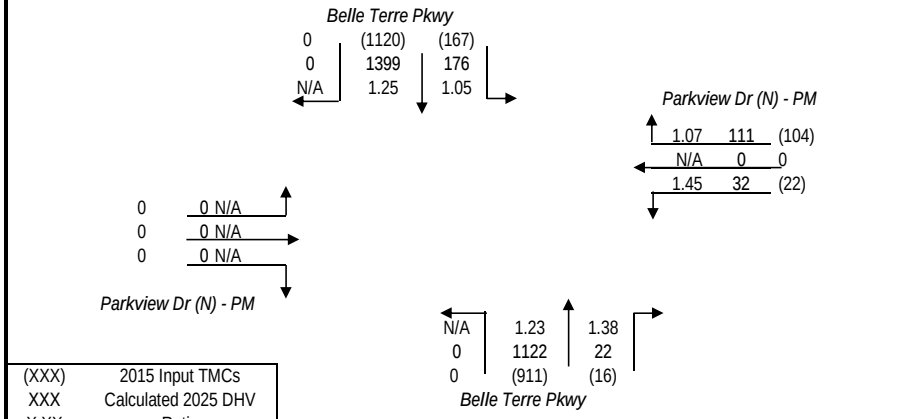

2015 INPUT TMCs COMPARED TO 2030 DHV

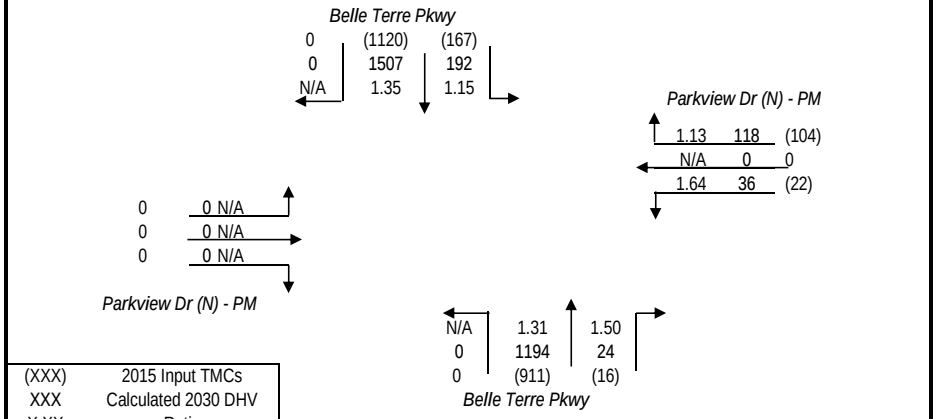

TURNS5 ANALYSIS SHEET - INPUT

Analyst:	-
Date:	13-Nov-15
Highway:	Belle Terre Pkwy
Intersection:	Pine Lakes Pkwy - PM
Project:	Belle Terre Blvd/Pkwy Intersection Analysis
County:	Flagler

Is this a 4 way intersection?

- ○ Yes, my intersection has four approaches

If not, which 3 approaches exist in the intersection?

- ○ EB, WB, and SB
- ○ EB, WB, and NB
- ◉ EB, SB, and NB
- ○ WB, SB, and NB

Is the Mainline Oriented North/South? (Enter Yes or No)

- ◉ Yes
- ○ No

K Factors	
Mainline	9.00%
Side street	9.00%

D Factors	*Mainline*
Northbound (NB)	41.0%
Southbound (SB)	59.0%
	Side street
Westbound (WB)	0.0%
Eastbound (EB)	39.0%

Do you have FTSUTMS Model Year traffic from which you would like to interpolate/extrapolate for project years? (Y/N) (Enter Yes or No)

- ◉ Yes
- ○ No

If "Yes" go to cell C47 If "No" go to cell C31

Enter Year and Growth Rates from Base Year:

	Year	*Rate* (1.0% = 0.01) Mainline	Side Street
Base	2015	0.00%	0.00%
Opening	2025		
Mid	2035		
Design	2045		

Mainline Growth Function

- ◉ Linear
- ○ Exponential
- ○ Decaying

Side Street Growth Function

- ◉ Linear
- ○ Exponential
- ○ Decaying

Enter Base Year AADTs for Volume Comparison:
(growth rates are used to calculate other project years)

From West: EB Approach	*From East: WB Approach*	*From North: SB Approach*	*From South: NB Approach*	***TOTAL***
0	0	0	0	0

Enter Project and Model Years

	Year
Base	2015
Opening	2020
Mid	2025
Design	2030
Model	2030

Enter Base and Model Year AADTs for Volume Comparison:
(volumes for other project years are calculated by interpolation)

	From West: EB Approach	*From East: WB Approach*	*From North: SB Approach*	*From South: NB Approach*	***TOTAL***
2015	3900	0	25000	25000	53900
2030	7300	0	32000	32000	71300

		1st Guess Turning %'s for AADT Balancing	**Actual/Counted Traffic for 2015**
(EB LT)	*West-to-North*	80.4%	349
(EB THRU)	*West-to-East*	0.0%	0
(EB RT)	*West-to-South*	19.6%	85
(WB LT)	*East-to-South*	0.0%	0
(WB THRU)	*East-to-West*	0.0%	0
(WB RT)	*East-to-North*	0.0%	0
(SB LT)	*North-to-East*	0.0%	0
(SB THRU)	*North-to-South*	71.3%	1202
(SB RT)	*North-to-West*	28.7%	483
(NB LT)	*South-to-West*	9.3%	94
(NB THRU)	*South-to-North*	90.7%	921
(NB RT)	*South-to-East*	0.0%	0

Desired Closure: 6.50

Existing Year AADTs

Existing Turning Movement Counts

FSUTMS Model Year AADTs

First Guess Turning % Option Used
Existing Turning Movement Counts

Only the existing year total departure volumes [AADT*K*(1-D)] will be used to calculate the turning percentages first guess.

The turning percentages first guess is the same as the ***actual distribution of turning volumes entered***. No balancing technique is used.

Only the FSUTMS model year departure volumes [AADT*K*(1-D)] will be used to calculate the turning percentages first guess.

PROJECT TRAFFIC FOR Belle Terre Pkwy AT Pine Lakes Pkwy - PM

DESIGN HOUR TURNING MOVEMENTS IN YEAR 2015

Belle Terre Pkwy
(25000)
1328

11.9% 158 | 88.1% 1170 | 0.0% 0

Pine Lakes Pkwy - PM

0 0.0%
0 0.0% 0 0
0 0.0%

74.6% 102
(3900) 137 0.0% 0
25.4% 35

Pine Lakes Pkwy - PM

42 | 881 | 0
4.6% | 95.4% | 0.0%
923
(25000)
Belle Terre Pkwy

(XXXXX)	2015 AADT
XXXX	2015 DDHV
K ML =	9.00%
K SS =	9.00%

D Factors
41.0% NB
59.0% SB
39.0% EB

DESIGN HOUR TURNING MOVEMENTS IN YEAR 2020

Belle Terre Pkwy
(27000)
1451

13.8% 200 | 86.2% 1251 | 0.0% 0

Pine Lakes Pkwy - PM

0 0.0%
0 0.0% 0 0
0 0.0%

74.2% 131
(5000) 177 0.0% 0
25.8% 46

Pine Lakes Pkwy - PM

55 | 954 | 0
5.5% | 94.5% | 0.0%
1009
(27000)
Belle Terre Pkwy

(XXXXX)	2020 AADT
XXXX	2020 DDHV
K ML =	9.00%
K SS =	9.00%

D Factors
41.0% NB
59.0% SB
39.0% EB

DESIGN HOUR TURNING MOVEMENTS IN YEAR 2025

Belle Terre Pkwy
(30000)
1575

15.4% 243 | 84.6% 1332 | 0.0% 0

Pine Lakes Pkwy - PM

0 0.0%
0 0.0% 0 0
0 0.0%

74.0% 160
(6200) 216 0.0% 0
26.0% 56

Pine Lakes Pkwy - PM

69 | 1026 | 0
6.3% | 93.7% | 0.0%
1095
(30000)
Belle Terre Pkwy

(XXXXX)	2025 AADT
XXXX	2025 DDHV
K ML =	9.00%
K SS =	9.00%

D Factors
41.0% NB
59.0% SB
39.0% EB

DESIGN HOUR TURNING MOVEMENTS IN YEAR 2030

Belle Terre Pkwy
(32000)
1699

10.8% 183 | 89.2% 1516 | 0.0% 0

Pine Lakes Pkwy - PM

0 0.0%
0 0.0% 0 0
0 0.0%

38.9% 100
(7300) 256 0.0% 0
61.1% 156

Pine Lakes Pkwy - PM

196 | 985 | 0
16.6% | 83.4% | 0.0%
1181
(32000)
Belle Terre Pkwy

(XXXXX)	2030 AADT
XXXX	2030 DDHV
K ML =	9.00%
K SS =	9.00%

D Factors
41.0% NB
59.0% SB
39.0% EB

PROJECT TRAFFIC FOR Belle Terre Pkwy AT Pine Lakes Pkwy - PM

2015 INPUT TMCs COMPARED TO 2015 DHV

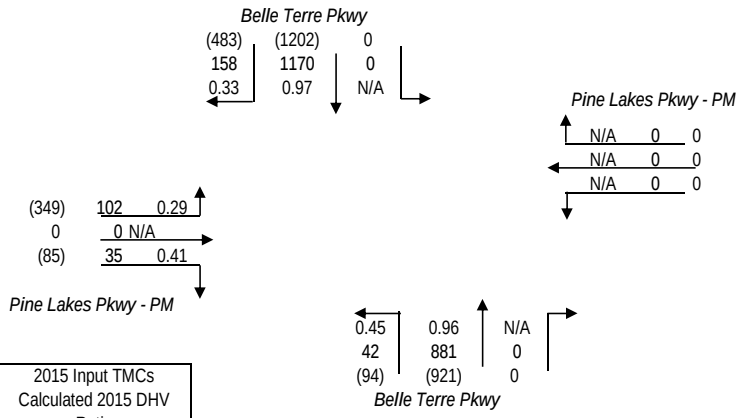

(XXX)	2015 Input TMCs
XXX	Calculated 2015 DHV
X.XX	Ratio

2015 INPUT TMCs COMPARED TO 2020 DHV

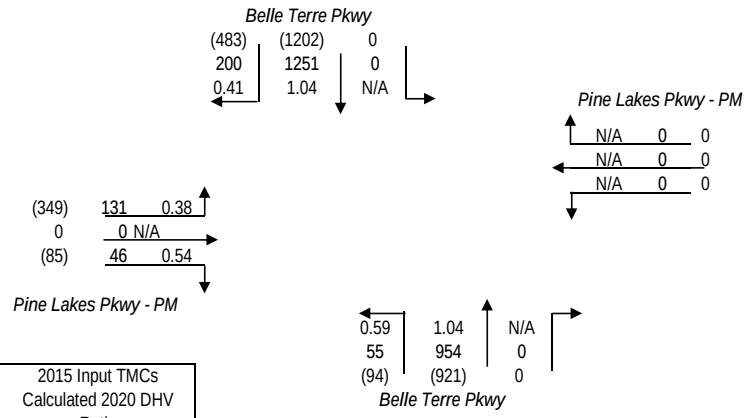

(XXX)	2015 Input TMCs
XXX	Calculated 2020 DHV
X.XX	Ratio

2015 INPUT TMCs COMPARED TO 2025 DHV

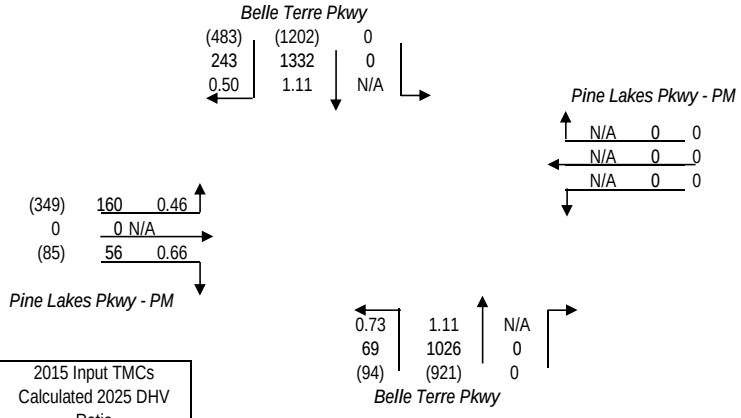

(XXX)	2015 Input TMCs
XXX	Calculated 2025 DHV
X.XX	Ratio

2015 INPUT TMCs COMPARED TO 2030 DHV

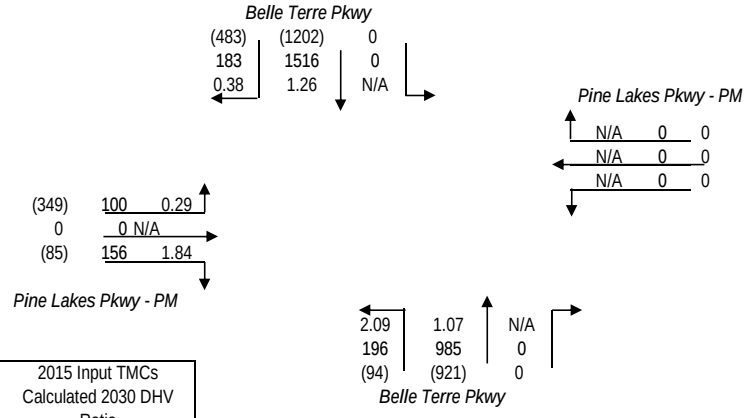

(XXX)	2015 Input TMCs
XXX	Calculated 2030 DHV
X.XX	Ratio

Appendix O

No-Build SYNCHRO Intersection Analysis Outputs for Year 2030

Lane Group	WBL	WBR	NBT	NBR	SBL	SBT
Lane Configurations						
Volume (vph)	306	79	717	155	34	1009
Ideal Flow (vphpl)	1900	1900	1900	1900	1900	1900
Lane Width (ft)	12	12	12	12	12	12
Grade (%)	0%		0%			0%
Storage Length (ft)	0	400		200	450	
Storage Lanes	1	1		1	1	
Taper Length (ft)	25				50	
Satd. Flow (prot)	1770	1583	3471	1538	1641	3406
Flt Permitted	0.950				0.950	
Satd. Flow (perm)	1770	1583	3471	1538	1641	3406
Right Turn on Red		Yes		Yes		
Satd. Flow (RTOR)		83		163		
Link Speed (mph)	50		60			60
Link Distance (ft)	1054		1255			1357
Travel Time (s)	14.4		14.3			15.4
Confl. Peds. (#/hr)						
Confl. Bikes (#/hr)						
Peak Hour Factor	0.95	0.95	0.95	0.95	0.95	0.95
Growth Factor	100%	100%	100%	100%	100%	100%
Heavy Vehicles (%)	2%	2%	4%	5%	10%	6%
Bus Blockages (#/hr)	0	0	0	0	0	0
Parking (#/hr)						
Mid-Block Traffic (%)	0%		0%			0%
Shared Lane Traffic (%)						
Lane Group Flow (vph)	322	83	755	163	36	1062
Turn Type	Prot	Prot	NA	Prot	Prot	NA
Protected Phases	4	4	6	6	5	2
Permitted Phases						
Detector Phase	4	4	6	6	5	2
Switch Phase						
Minimum Initial (s)	8.0	8.0	15.0	15.0	6.0	15.0
Minimum Split (s)	16.1	16.1	23.9	23.9	14.9	23.9
Total Split (s)	30.0	30.0	42.0	42.0	18.0	60.0
Total Split (%)	33.3%	33.3%	46.7%	46.7%	20.0%	66.7%
Yellow Time (s)	5.1	5.1	5.9	5.9	5.9	5.9
All-Red Time (s)	3.0	3.0	3.0	3.0	3.0	3.0
Lost Time Adjust (s)	0.0	0.0	0.0	0.0	0.0	0.0
Total Lost Time (s)	8.1	8.1	8.9	8.9	8.9	8.9
Lead/Lag			Lag	Lag	Lead	
Lead-Lag Optimize?			Yes	Yes	Yes	
Recall Mode	None	None	Min	Min	None	Min
Act Effct Green (s)	17.3	17.3	24.9	24.9	7.5	33.4
Actuated g/C Ratio	0.25	0.25	0.36	0.36	0.11	0.48
v/c Ratio	0.73	0.18	0.60	0.25	0.20	0.64
Control Delay	37.3	7.7	22.5	4.7	37.6	14.8
Queue Delay	0.0	0.0	0.0	0.0	0.0	0.0
Total Delay	37.3	7.7	22.5	4.7	37.6	14.8
LOS	D	A	C	A	D	B

Lane Group	WBL	WBR	NBT	NBR	SBL	SBT
Approach Delay	31.2		19.3			15.5
Approach LOS	C		B			B

Intersection Summary	
Area Type:	Other
Cycle Length: 90	
Actuated Cycle Length: 69.1	
Natural Cycle: 60	
Control Type: Actuated-Uncoordinated	
Maximum v/c Ratio: 0.73	
Intersection Signal Delay: 19.6	Intersection LOS: B
Intersection Capacity Utilization 59.4%	ICU Level of Service B
Analysis Period (min) 15	

Splits and Phases: 1: SR 5 (US 1) & Belle Terre Blvd

Intersection	
Int Delay, s/veh	1.7

Movement	EBL	EBT	EBR	WBL	WBT	WBR	NBL	NBT	NBR	SBL	SBT	SBR
Vol, veh/h	7	177	5	6	346	28	7	0	7	33	0	32
Conflicting Peds, #/hr	0	0	0	0	0	0	0	0	0	0	0	0
Sign Control	Free	Free	Free	Free	Free	Free	Stop	Stop	Stop	Stop	Stop	Stop
RT Channelized	-	-	None	-	-	None	-	-	None	-	-	None
Storage Length	-	-	-	-	-	-	-	-	-	-	-	-
Veh in Median Storage, #	-	0	-	-	0	-	-	0	-	-	0	-
Grade, %	-	0	-	-	0	-	-	0	-	-	0	-
Peak Hour Factor	95	95	95	95	95	95	95	95	95	95	95	95
Heavy Vehicles, %	2	2	2	2	2	2	0	0	0	7	0	0
Mvmt Flow	7	186	5	6	364	29	7	0	7	35	0	34

Major/Minor	Major1			Major2			Minor1			Minor2		
Conflicting Flow All	394	0	0	192	0	0	612	610	189	599	598	379
Stage 1	-	-	-	-	-	-	204	204	-	392	392	-
Stage 2	-	-	-	-	-	-	408	406	-	207	206	-
Critical Hdwy	4.12	-	-	4.12	-	-	7.1	6.5	6.2	7.17	6.5	6.2
Critical Hdwy Stg 1	-	-	-	-	-	-	6.1	5.5	-	6.17	5.5	-
Critical Hdwy Stg 2	-	-	-	-	-	-	6.1	5.5	-	6.17	5.5	-
Follow-up Hdwy	2.218	-	-	2.218	-	-	3.5	4	3.3	3.563	4	3.3
Pot Cap-1 Maneuver	1165	-	-	1381	-	-	408	412	858	406	418	672
Stage 1	-	-	-	-	-	-	803	737	-	623	610	-
Stage 2	-	-	-	-	-	-	624	601	-	784	735	-
Platoon blocked, %		-	-		-	-						
Mov Cap-1 Maneuver	1165	-	-	1381	-	-	384	407	858	399	413	672
Mov Cap-2 Maneuver	-	-	-	-	-	-	384	407	-	399	413	-
Stage 1	-	-	-	-	-	-	797	732	-	619	606	-
Stage 2	-	-	-	-	-	-	589	597	-	772	730	-

Approach	EB	WB	NB	SB
HCM Control Delay, s	0.3	0.1	12	13.4
HCM LOS			B	B

Minor Lane/Major Mvmt	NBLn1	EBL	EBT	EBR	WBL	WBT	WBR	SBLn1
Capacity (veh/h)	531	1165	-	-	1381	-	-	499
HCM Lane V/C Ratio	0.028	0.006	-	-	0.005	-	-	0.137
HCM Control Delay (s)	12	8.1	0	-	7.6	0	-	13.4
HCM Lane LOS	B	A	A	-	A	A	-	B
HCM 95th %tile Q(veh)	0.1	0	-	-	0	-	-	0.5

Intersection	
Int Delay, s/veh	0.7

Movement	EBT	EBR	WBL	WBT	NBL	NBR
Vol, veh/h	211	6	5	368	12	24
Conflicting Peds, #/hr	0	0	0	0	0	0
Sign Control	Free	Free	Free	Free	Stop	Stop
RT Channelized	-	None	-	None	-	None
Storage Length	-	-	-	-	0	-
Veh in Median Storage, #	0	-	-	0	0	-
Grade, %	0	-	-	0	0	-
Peak Hour Factor	95	95	95	95	95	95
Heavy Vehicles, %	2	2	2	2	0	0
Mvmt Flow	222	6	5	387	13	25

Major/Minor	Major1		Major2		Minor1	
Conflicting Flow All	0	0	228	0	623	225
Stage 1	-	-	-	-	225	-
Stage 2	-	-	-	-	398	-
Critical Hdwy	-	-	4.12	-	6.4	6.2
Critical Hdwy Stg 1	-	-	-	-	5.4	-
Critical Hdwy Stg 2	-	-	-	-	5.4	-
Follow-up Hdwy	-	-	2.218	-	3.5	3.3
Pot Cap-1 Maneuver	-	-	1340	-	453	819
Stage 1	-	-	-	-	817	-
Stage 2	-	-	-	-	683	-
Platoon blocked, %	-	-		-		
Mov Cap-1 Maneuver	-	-	1340	-	451	819
Mov Cap-2 Maneuver	-	-	-	-	451	-
Stage 1	-	-	-	-	817	-
Stage 2	-	-	-	-	680	-

Approach	EB	WB	NB
HCM Control Delay, s	0	0.1	10.9
HCM LOS			B

Minor Lane/Major Mvmt	NBLn1	EBT	EBR	WBL	WBT
Capacity (veh/h)	644	-	-	1340	-
HCM Lane V/C Ratio	0.059	-	-	0.004	-
HCM Control Delay (s)	10.9	-	-	7.7	0
HCM Lane LOS	B	-	-	A	A
HCM 95th %tile Q(veh)	0.2	-	-	0	-

Intersection	
Int Delay, s/veh	1.5

Movement	EBL	EBT	EBR	WBL	WBT	WBR	NBL	NBT	NBR	SBL	SBT	SBR
Vol, veh/h	12	213	10	10	354	5	9	2	38	10	2	10
Conflicting Peds, #/hr	0	0	0	0	0	0	0	0	0	0	0	0
Sign Control	Free	Free	Free	Free	Free	Free	Stop	Stop	Stop	Stop	Stop	Stop
RT Channelized	-	-	None	-	-	None	-	-	None	-	-	None
Storage Length	-	-	-	-	-	-	-	-	-	-	-	-
Veh in Median Storage, #	-	0	-	-	0	-	-	0	-	-	0	-
Grade, %	-	0	-	-	0	-	-	0	-	-	0	-
Peak Hour Factor	95	95	95	95	95	95	95	95	95	95	95	95
Heavy Vehicles, %	2	2	2	2	2	2	0	0	13	0	0	0
Mvmt Flow	13	224	11	11	373	5	9	2	40	11	2	11

Major/Minor	Major1			Major2			Minor1			Minor2		
Conflicting Flow All	378	0	0	235	0	0	658	654	229	672	656	375
Stage 1	-	-	-	-	-	-	255	255	-	396	396	-
Stage 2	-	-	-	-	-	-	403	399	-	276	260	-
Critical Hdwy	4.12	-	-	4.12	-	-	7.1	6.5	6.33	7.1	6.5	6.2
Critical Hdwy Stg 1	-	-	-	-	-	-	6.1	5.5	-	6.1	5.5	-
Critical Hdwy Stg 2	-	-	-	-	-	-	6.1	5.5	-	6.1	5.5	-
Follow-up Hdwy	2.218	-	-	2.218	-	-	3.5	4	3.417	3.5	4	3.3
Pot Cap-1 Maneuver	1180	-	-	1332	-	-	380	389	784	372	388	676
Stage 1	-	-	-	-	-	-	754	700	-	633	607	-
Stage 2	-	-	-	-	-	-	628	606	-	735	697	-
Platoon blocked, %		-	-		-	-						
Mov Cap-1 Maneuver	1180	-	-	1332	-	-	366	380	784	345	379	676
Mov Cap-2 Maneuver	-	-	-	-	-	-	366	380	-	345	379	-
Stage 1	-	-	-	-	-	-	744	691	-	625	601	-
Stage 2	-	-	-	-	-	-	610	600	-	686	688	-

Approach	EB	WB	NB	SB
HCM Control Delay, s	0.4	0.2	11.3	13.5
HCM LOS			B	B

Minor Lane/Major Mvmt	NBLn1	EBL	EBT	EBR	WBL	WBT	WBR	SBLn1
Capacity (veh/h)	626	1180	-	-	1332	-	-	448
HCM Lane V/C Ratio	0.082	0.011	-	-	0.008	-	-	0.052
HCM Control Delay (s)	11.3	8.1	0	-	7.7	0	-	13.5
HCM Lane LOS	B	A	A	-	A	A	-	B
HCM 95th %tile Q(veh)	0.3	0	-	-	0	-	-	0.2

Intersection	
Int Delay, s/veh	1.1

Movement	EBT	EBR	WBL	WBT	NBL	NBR
Vol, veh/h	246	15	15	360	9	55
Conflicting Peds, #/hr	0	0	0	0	0	0
Sign Control	Free	Free	Free	Free	Stop	Stop
RT Channelized	-	None	-	None	-	None
Storage Length	-	-	-	-	0	-
Veh in Median Storage, #	0	-	-	0	0	-
Grade, %	0	-	-	0	0	-
Peak Hour Factor	95	95	95	95	95	95
Heavy Vehicles, %	2	2	2	2	14	0
Mvmt Flow	259	16	16	379	9	58

Major/Minor	Major1		Major2		Minor1	
Conflicting Flow All	0	0	275	0	678	267
Stage 1	-	-	-	-	267	-
Stage 2	-	-	-	-	411	-
Critical Hdwy	-	-	4.12	-	6.54	6.2
Critical Hdwy Stg 1	-	-	-	-	5.54	-
Critical Hdwy Stg 2	-	-	-	-	5.54	-
Follow-up Hdwy	-	-	2.218	-	3.626	3.3
Pot Cap-1 Maneuver	-	-	1288	-	400	777
Stage 1	-	-	-	-	751	-
Stage 2	-	-	-	-	644	-
Platoon blocked, %	-	-		-		
Mov Cap-1 Maneuver	-	-	1288	-	394	777
Mov Cap-2 Maneuver	-	-	-	-	394	-
Stage 1	-	-	-	-	751	-
Stage 2	-	-	-	-	634	-

Approach	EB	WB	NB
HCM Control Delay, s	0	0.3	10.8
HCM LOS			B

Minor Lane/Major Mvmt	NBLn1	EBT	EBR	WBL	WBT
Capacity (veh/h)	684	-	-	1288	-
HCM Lane V/C Ratio	0.098	-	-	0.012	-
HCM Control Delay (s)	10.8	-	-	7.8	0
HCM Lane LOS	B	-	-	A	A
HCM 95th %tile Q(veh)	0.3	-	-	0	-

Intersection	
Int Delay, s/veh	1.1

Movement	WBL	WBR	NBT	NBR	SBL	SBT
Vol, veh/h	32	20	288	13	8	347
Conflicting Peds, #/hr	0	0	0	0	0	0
Sign Control	Stop	Stop	Free	Free	Free	Free
RT Channelized	-	None	-	None	-	None
Storage Length	0	-	-	-	-	-
Veh in Median Storage, #	0	-	0	-	-	0
Grade, %	0	-	0	-	-	0
Peak Hour Factor	95	95	95	95	95	95
Heavy Vehicles, %	0	0	2	2	2	2
Mvmt Flow	34	21	303	14	8	365

Major/Minor	Minor1		Major1		Major2	
Conflicting Flow All	692	310	0	0	317	0
Stage 1	310	-	-	-	-	-
Stage 2	382	-	-	-	-	-
Critical Hdwy	6.4	6.2	-	-	4.12	-
Critical Hdwy Stg 1	5.4	-	-	-	-	-
Critical Hdwy Stg 2	5.4	-	-	-	-	-
Follow-up Hdwy	3.5	3.3	-	-	2.218	-
Pot Cap-1 Maneuver	413	735	-	-	1243	-
Stage 1	748	-	-	-	-	-
Stage 2	694	-	-	-	-	-
Platoon blocked, %			-	-		-
Mov Cap-1 Maneuver	410	735	-	-	1243	-
Mov Cap-2 Maneuver	410	-	-	-	-	-
Stage 1	748	-	-	-	-	-
Stage 2	688	-	-	-	-	-

Approach	WB	NB	SB
HCM Control Delay, s	13.2	0	0.2
HCM LOS	B		

Minor Lane/Major Mvmt	NBT	NBR	WBLn1	SBL	SBT
Capacity (veh/h)	-	-	494	1243	-
HCM Lane V/C Ratio	-	-	0.111	0.007	-
HCM Control Delay (s)	-	-	13.2	7.9	0
HCM Lane LOS	-	-	B	A	A
HCM 95th %tile Q(veh)	-	-	0.4	0	-

Intersection	
Int Delay, s/veh	1

Movement	EBL	EBR	NBL	NBT	SBT	SBR
Vol, veh/h	21	34	8	300	321	28
Conflicting Peds, #/hr	0	0	0	0	0	0
Sign Control	Stop	Stop	Free	Free	Free	Free
RT Channelized	-	None	-	None	-	None
Storage Length	0	-	-	-	-	-
Veh in Median Storage, #	0	-	-	0	0	-
Grade, %	0	-	-	0	0	-
Peak Hour Factor	95	95	95	95	95	95
Heavy Vehicles, %	0	6	2	2	2	2
Mvmt Flow	22	36	8	316	338	29

Major/Minor	Minor2		Major1		Major2	
Conflicting Flow All	686	353	367	0	-	0
Stage 1	353	-	-	-	-	-
Stage 2	333	-	-	-	-	-
Critical Hdwy	6.4	6.26	4.12	-	-	-
Critical Hdwy Stg 1	5.4	-	-	-	-	-
Critical Hdwy Stg 2	5.4	-	-	-	-	-
Follow-up Hdwy	3.5	3.354	2.218	-	-	-
Pot Cap-1 Maneuver	416	682	1192	-	-	-
Stage 1	716	-	-	-	-	-
Stage 2	731	-	-	-	-	-
Platoon blocked, %				-	-	-
Mov Cap-1 Maneuver	413	682	1192	-	-	-
Mov Cap-2 Maneuver	413	-	-	-	-	-
Stage 1	716	-	-	-	-	-
Stage 2	725	-	-	-	-	-

Approach	EB	NB	SB
HCM Control Delay, s	12.4	0.2	0
HCM LOS	B		

Minor Lane/Major Mvmt	NBL	NBT	EBLn1	SBT	SBR
Capacity (veh/h)	1192	-	546	-	-
HCM Lane V/C Ratio	0.007	-	0.106	-	-
HCM Control Delay (s)	8	0	12.4	-	-
HCM Lane LOS	A	A	B	-	-
HCM 95th %tile Q(veh)	0	-	0.4	-	-

Intersection	
Int Delay, s/veh	0.9

Movement	EBL	EBR	NBL	NBT	SBT	SBR
Vol, veh/h	18	23	12	309	326	9
Conflicting Peds, #/hr	0	0	0	0	0	0
Sign Control	Stop	Stop	Free	Free	Free	Free
RT Channelized	-	None	-	None	-	None
Storage Length	0	-	-	-	-	-
Veh in Median Storage, #	0	-	-	0	0	-
Grade, %	0	-	-	0	0	-
Peak Hour Factor	95	95	95	95	95	95
Heavy Vehicles, %	0	0	2	2	2	2
Mvmt Flow	19	24	13	325	343	9

Major/Minor	Minor2		Major1		Major2	
Conflicting Flow All	699	348	353	0	-	0
Stage 1	348	-	-	-	-	-
Stage 2	351	-	-	-	-	-
Critical Hdwy	6.4	6.2	4.12	-	-	-
Critical Hdwy Stg 1	5.4	-	-	-	-	-
Critical Hdwy Stg 2	5.4	-	-	-	-	-
Follow-up Hdwy	3.5	3.3	2.218	-	-	-
Pot Cap-1 Maneuver	409	700	1206	-	-	-
Stage 1	719	-	-	-	-	-
Stage 2	717	-	-	-	-	-
Platoon blocked, %				-	-	-
Mov Cap-1 Maneuver	404	700	1206	-	-	-
Mov Cap-2 Maneuver	404	-	-	-	-	-
Stage 1	719	-	-	-	-	-
Stage 2	708	-	-	-	-	-

Approach	EB	NB	SB
HCM Control Delay, s	12.4	0.3	0
HCM LOS	B		

Minor Lane/Major Mvmt	NBL	NBT	EBLn1	SBT	SBR
Capacity (veh/h)	1206	-	530	-	-
HCM Lane V/C Ratio	0.01	-	0.081	-	-
HCM Control Delay (s)	8	0	12.4	-	-
HCM Lane LOS	A	A	B	-	-
HCM 95th %tile Q(veh)	0	-	0.3	-	-

Intersection	
Int Delay, s/veh	1.8

Movement	WBL	WBR	NBT	NBR	SBL	SBT
Vol, veh/h	21	70	307	20	34	314
Conflicting Peds, #/hr	0	0	0	0	0	0
Sign Control	Stop	Stop	Free	Free	Free	Free
RT Channelized	-	None	-	None	-	None
Storage Length	0	-	-	-	-	-
Veh in Median Storage, #	0	-	0	-	-	0
Grade, %	0	-	0	-	-	0
Peak Hour Factor	95	95	95	95	95	95
Heavy Vehicles, %	7	5	2	2	2	2
Mvmt Flow	22	74	323	21	36	331

Major/Minor	Minor1		Major1		Major2	
Conflicting Flow All	736	334	0	0	344	0
Stage 1	334	-	-	-	-	-
Stage 2	402	-	-	-	-	-
Critical Hdwy	6.47	6.25	-	-	4.12	-
Critical Hdwy Stg 1	5.47	-	-	-	-	-
Critical Hdwy Stg 2	5.47	-	-	-	-	-
Follow-up Hdwy	3.563	3.345	-	-	2.218	-
Pot Cap-1 Maneuver	379	701	-	-	1215	-
Stage 1	714	-	-	-	-	-
Stage 2	665	-	-	-	-	-
Platoon blocked, %			-	-		-
Mov Cap-1 Maneuver	365	701	-	-	1215	-
Mov Cap-2 Maneuver	365	-	-	-	-	-
Stage 1	714	-	-	-	-	-
Stage 2	641	-	-	-	-	-

Approach	WB	NB	SB
HCM Control Delay, s	12.5	0	0.8
HCM LOS	B		

Minor Lane/Major Mvmt	NBT	NBR	WBLn1	SBL	SBT
Capacity (veh/h)	-	-	578	1215	-
HCM Lane V/C Ratio	-	-	0.166	0.029	-
HCM Control Delay (s)	-	-	12.5	8.1	0
HCM Lane LOS	-	-	B	A	A
HCM 95th %tile Q(veh)	-	-	0.6	0.1	-

Intersection	
Int Delay, s/veh	0.8

Movement	EBL	EBR	NBL	NBT	SBT	SBR
Vol, veh/h	28	15	2	375	333	21
Conflicting Peds, #/hr	0	0	0	0	0	0
Sign Control	Stop	Stop	Free	Free	Free	Free
RT Channelized	-	None	-	None	-	None
Storage Length	0	-	-	-	-	-
Veh in Median Storage, #	0	-	-	0	0	-
Grade, %	0	-	-	0	0	-
Peak Hour Factor	95	95	95	95	95	95
Heavy Vehicles, %	0	0	2	2	2	2
Mvmt Flow	29	16	2	395	351	22

Major/Minor	Minor2		Major1		Major2	
Conflicting Flow All	761	362	373	0	-	0
Stage 1	362	-	-	-	-	-
Stage 2	399	-	-	-	-	-
Critical Hdwy	6.4	6.2	4.12	-	-	-
Critical Hdwy Stg 1	5.4	-	-	-	-	-
Critical Hdwy Stg 2	5.4	-	-	-	-	-
Follow-up Hdwy	3.5	3.3	2.218	-	-	-
Pot Cap-1 Maneuver	376	687	1185	-	-	-
Stage 1	709	-	-	-	-	-
Stage 2	682	-	-	-	-	-
Platoon blocked, %				-	-	-
Mov Cap-1 Maneuver	375	687	1185	-	-	-
Mov Cap-2 Maneuver	375	-	-	-	-	-
Stage 1	709	-	-	-	-	-
Stage 2	681	-	-	-	-	-

Approach	EB	NB	SB
HCM Control Delay, s	14	0	0
HCM LOS	B		

Minor Lane/Major Mvmt	NBL	NBT	EBLn1	SBT	SBR
Capacity (veh/h)	1185	-	446	-	-
HCM Lane V/C Ratio	0.002	-	0.101	-	-
HCM Control Delay (s)	8	0	14	-	-
HCM Lane LOS	A	A	B	-	-
HCM 95th %tile Q(veh)	0	-	0.3	-	-

Intersection	
Int Delay, s/veh	0.4

Movement	EBL	EBR	NBL	NBT	SBT	SBR
Vol, veh/h	14	10	2	401	347	15
Conflicting Peds, #/hr	0	0	0	0	0	0
Sign Control	Stop	Stop	Free	Free	Free	Free
RT Channelized	-	None	-	None	-	None
Storage Length	0	-	-	-	-	-
Veh in Median Storage, #	0	-	-	0	0	-
Grade, %	0	-	-	0	0	-
Peak Hour Factor	95	95	95	95	95	95
Heavy Vehicles, %	0	0	2	2	2	2
Mvmt Flow	15	11	2	422	365	16

Major/Minor	Minor2		Major1		Major2	
Conflicting Flow All	799	373	381	0	-	0
Stage 1	373	-	-	-	-	-
Stage 2	426	-	-	-	-	-
Critical Hdwy	6.4	6.2	4.12	-	-	-
Critical Hdwy Stg 1	5.4	-	-	-	-	-
Critical Hdwy Stg 2	5.4	-	-	-	-	-
Follow-up Hdwy	3.5	3.3	2.218	-	-	-
Pot Cap-1 Maneuver	357	678	1177	-	-	-
Stage 1	701	-	-	-	-	-
Stage 2	663	-	-	-	-	-
Platoon blocked, %				-	-	-
Mov Cap-1 Maneuver	356	678	1177	-	-	-
Mov Cap-2 Maneuver	356	-	-	-	-	-
Stage 1	701	-	-	-	-	-
Stage 2	662	-	-	-	-	-

Approach	EB	NB	SB
HCM Control Delay, s	13.6	0	0
HCM LOS	B		

Minor Lane/Major Mvmt	NBL	NBT	EBLn1	SBT	SBR
Capacity (veh/h)	1177	-	444	-	-
HCM Lane V/C Ratio	0.002	-	0.057	-	-
HCM Control Delay (s)	8.1	0	13.6	-	-
HCM Lane LOS	A	A	B	-	-
HCM 95th %tile Q(veh)	0	-	0.2	-	-

Intersection	
Int Delay, s/veh	0.6

Movement	EBL	EBR	NBL	NBT	SBT	SBR
Vol, veh/h	23	8	5	410	354	15
Conflicting Peds, #/hr	0	0	0	0	0	0
Sign Control	Stop	Stop	Free	Free	Free	Free
RT Channelized	-	None	-	None	-	None
Storage Length	0	-	-	-	-	-
Veh in Median Storage, #	0	-	-	0	0	-
Grade, %	0	-	-	0	0	-
Peak Hour Factor	95	95	95	95	95	95
Heavy Vehicles, %	0	40	2	2	2	2
Mvmt Flow	24	8	5	432	373	16

Major/Minor	Minor2		Major1		Major2	
Conflicting Flow All	823	381	388	0	-	0
Stage 1	381	-	-	-	-	-
Stage 2	442	-	-	-	-	-
Critical Hdwy	6.4	6.6	4.12	-	-	-
Critical Hdwy Stg 1	5.4	-	-	-	-	-
Critical Hdwy Stg 2	5.4	-	-	-	-	-
Follow-up Hdwy	3.5	3.66	2.218	-	-	-
Pot Cap-1 Maneuver	346	590	1170	-	-	-
Stage 1	695	-	-	-	-	-
Stage 2	652	-	-	-	-	-
Platoon blocked, %				-	-	-
Mov Cap-1 Maneuver	344	590	1170	-	-	-
Mov Cap-2 Maneuver	344	-	-	-	-	-
Stage 1	695	-	-	-	-	-
Stage 2	648	-	-	-	-	-

Approach	EB	NB	SB
HCM Control Delay, s	15.2	0.1	0
HCM LOS	C		

Minor Lane/Major Mvmt	NBL	NBT	EBLn1	SBT	SBR
Capacity (veh/h)	1170	-	385	-	-
HCM Lane V/C Ratio	0.004	-	0.085	-	-
HCM Control Delay (s)	8.1	0	15.2	-	-
HCM Lane LOS	A	A	C	-	-
HCM 95th %tile Q(veh)	0	-	0.3	-	-

Intersection	
Int Delay, s/veh	0.8

Movement	EBL	EBR	NBL	NBT	SBT	SBR
Vol, veh/h	21	22	12	421	347	15
Conflicting Peds, #/hr	0	0	0	0	0	0
Sign Control	Stop	Stop	Free	Free	Free	Free
RT Channelized	-	None	-	None	-	None
Storage Length	0	-	-	-	-	-
Veh in Median Storage, #	0	-	-	0	0	-
Grade, %	0	-	-	0	0	-
Peak Hour Factor	95	95	95	95	95	95
Heavy Vehicles, %	0	0	2	2	2	2
Mvmt Flow	22	23	13	443	365	16

Major/Minor	Minor2		Major1		Major2	
Conflicting Flow All	841	373	381	0	-	0
Stage 1	373	-	-	-	-	-
Stage 2	468	-	-	-	-	-
Critical Hdwy	6.4	6.2	4.12	-	-	-
Critical Hdwy Stg 1	5.4	-	-	-	-	-
Critical Hdwy Stg 2	5.4	-	-	-	-	-
Follow-up Hdwy	3.5	3.3	2.218	-	-	-
Pot Cap-1 Maneuver	338	678	1177	-	-	-
Stage 1	701	-	-	-	-	-
Stage 2	634	-	-	-	-	-
Platoon blocked, %				-	-	-
Mov Cap-1 Maneuver	333	678	1177	-	-	-
Mov Cap-2 Maneuver	333	-	-	-	-	-
Stage 1	701	-	-	-	-	-
Stage 2	624	-	-	-	-	-

Approach	EB	NB	SB
HCM Control Delay, s	13.9	0.2	0
HCM LOS	B		

Minor Lane/Major Mvmt	NBL	NBT	EBLn1	SBT	SBR
Capacity (veh/h)	1177	-	450	-	-
HCM Lane V/C Ratio	0.011	-	0.101	-	-
HCM Control Delay (s)	8.1	0	13.9	-	-
HCM Lane LOS	A	A	B	-	-
HCM 95th %tile Q(veh)	0	-	0.3	-	-

Intersection	
Int Delay, s/veh	1.7

Movement	EBL	EBR	NBL	NBT	SBT	SBR
Vol, veh/h	70	6	6	436	356	25
Conflicting Peds, #/hr	0	0	0	0	0	0
Sign Control	Stop	Stop	Free	Free	Free	Free
RT Channelized	-	None	-	None	-	None
Storage Length	0	-	-	-	-	-
Veh in Median Storage, #	0	-	-	0	0	-
Grade, %	0	-	-	0	0	-
Peak Hour Factor	95	95	95	95	95	95
Heavy Vehicles, %	6	0	2	2	2	2
Mvmt Flow	74	6	6	459	375	26

Major/Minor	Minor2		Major1		Major2	
Conflicting Flow All	860	388	401	0	-	0
Stage 1	388	-	-	-	-	-
Stage 2	472	-	-	-	-	-
Critical Hdwy	6.46	6.2	4.12	-	-	-
Critical Hdwy Stg 1	5.46	-	-	-	-	-
Critical Hdwy Stg 2	5.46	-	-	-	-	-
Follow-up Hdwy	3.554	3.3	2.218	-	-	-
Pot Cap-1 Maneuver	321	665	1158	-	-	-
Stage 1	677	-	-	-	-	-
Stage 2	619	-	-	-	-	-
Platoon blocked, %				-	-	-
Mov Cap-1 Maneuver	319	665	1158	-	-	-
Mov Cap-2 Maneuver	319	-	-	-	-	-
Stage 1	677	-	-	-	-	-
Stage 2	615	-	-	-	-	-

Approach	EB	NB	SB
HCM Control Delay, s	19.2	0.1	0
HCM LOS	C		

Minor Lane/Major Mvmt	NBL	NBT	EBLn1	SBT	SBR
Capacity (veh/h)	1158	-	333	-	-
HCM Lane V/C Ratio	0.005	-	0.24	-	-
HCM Control Delay (s)	8.1	0	19.2	-	-
HCM Lane LOS	A	A	C	-	-
HCM 95th %tile Q(veh)	0	-	0.9	-	-

Lane Group	EBL	EBT	EBR	WBL	WBT	WBR	NBL	NBT	NBR	SBL	SBT	SBR
Lane Configurations												
Volume (vph)	153	421	33	117	580	404	81	244	181	584	231	394
Ideal Flow (vphpl)	1900	1900	1900	1900	1900	1900	1900	1900	1900	1900	1900	1900
Lane Width (ft)	12	12	12	12	12	12	12	12	12	12	12	12
Grade (%)		0%			0%			0%			0%	
Storage Length (ft)	450		475	485		485	0		280	525		0
Storage Lanes	1		1	1		1	1		1	2		1
Taper Length (ft)	50			50			200			25		
Satd. Flow (prot)	1641	3374	1615	1656	3438	1509	1770	1744	0	3433	1863	1583
Flt Permitted	0.950			0.950			0.950			0.950		
Satd. Flow (perm)	1641	3374	1615	1656	3438	1509	1770	1744	0	3433	1863	1583
Right Turn on Red			Yes			Yes			Yes			Yes
Satd. Flow (RTOR)			188			219		18				415
Link Speed (mph)		55			55			50			45	
Link Distance (ft)		2394			2403			1138			1482	
Travel Time (s)		29.7			29.8			15.5			22.5	
Confl. Peds. (#/hr)												
Confl. Bikes (#/hr)												
Peak Hour Factor	0.95	0.95	0.95	0.95	0.95	0.95	0.95	0.95	0.95	0.95	0.95	0.95
Growth Factor	100%	100%	100%	100%	100%	100%	100%	100%	100%	100%	100%	100%
Heavy Vehicles (%)	10%	7%	0%	9%	5%	7%	2%	2%	2%	2%	2%	2%
Bus Blockages (#/hr)	0	0	0	0	0	0	0	0	0	0	0	0
Parking (#/hr)												
Mid-Block Traffic (%)		0%			0%			0%			0%	
Shared Lane Traffic (%)												
Lane Group Flow (vph)	161	443	35	123	611	425	85	448	0	615	243	415
Turn Type	Prot	NA	Prot	Prot	NA	pm+ov	Prot	NA		Prot	NA	Perm
Protected Phases	1	6	6	5	2	3	7	4		3	8	
Permitted Phases						2						8
Detector Phase	1	6	6	5	2	3	7	4		3	8	8
Switch Phase												
Minimum Initial (s)	5.0	17.0	17.0	5.0	17.0	10.0	10.0	6.0		10.0	6.0	6.0
Minimum Split (s)	13.8	25.8	25.8	13.8	44.8	18.2	18.5	14.5		18.2	51.2	51.2
Total Split (s)	41.0	57.0	57.0	31.0	47.0	56.0	31.0	36.0		56.0	61.0	61.0
Total Split (%)	22.8%	31.7%	31.7%	17.2%	26.1%	31.1%	17.2%	20.0%		31.1%	33.9%	33.9%
Yellow Time (s)	6.0	6.0	6.0	6.0	6.0	4.8	5.1	5.1		4.8	4.8	4.8
All-Red Time (s)	2.8	2.8	2.8	2.8	2.8	3.4	3.4	3.4		3.4	3.4	3.4
Lost Time Adjust (s)	0.0	0.0	0.0	0.0	0.0	0.0	0.0	0.0		0.0	0.0	0.0
Total Lost Time (s)	8.8	8.8	8.8	8.8	8.8	8.2	8.5	8.5		8.2	8.2	8.2
Lead/Lag	Lead	Lag	Lag	Lead	Lag	Lead	Lead	Lag		Lead	Lag	Lag
Lead-Lag Optimize?	Yes	Yes	Yes	Yes	Yes	Yes	Yes	Yes		Yes	Yes	Yes
Recall Mode	None	Min	Min	None	Min	Min	None	None		Min	None	None
Act Effct Green (s)	20.4	35.9	35.9	16.3	31.8	74.4	13.3	28.0		33.7	48.4	48.4
Actuated g/C Ratio	0.14	0.24	0.24	0.11	0.21	0.50	0.09	0.19		0.23	0.33	0.33
v/c Ratio	0.72	0.54	0.07	0.68	0.83	0.49	0.54	1.31		0.79	0.40	0.52
Control Delay	81.6	52.8	0.2	85.8	67.9	13.0	81.4	202.1		63.1	43.7	6.1
Queue Delay	0.0	0.0	0.0	0.0	0.0	0.0	0.0	0.0		0.0	0.0	0.0
Total Delay	81.6	52.8	0.2	85.8	67.9	13.0	81.4	202.1		63.1	43.7	6.1
LOS	F	D	A	F	E	B	F	F		E	D	A

Lane Group	EBL	EBT	EBR	WBL	WBT	WBR	NBL	NBT	NBR	SBL	SBT	SBR
Approach Delay		57.2			49.7			182.8			40.8	
Approach LOS		E			D			F			D	

Intersection Summary	
Area Type:	Other
Cycle Length: 180	
Actuated Cycle Length: 148.8	
Natural Cycle: 150	
Control Type: Actuated-Uncoordinated	
Maximum v/c Ratio: 1.31	
Intersection Signal Delay: 67.6	Intersection LOS: E
Intersection Capacity Utilization 93.6%	ICU Level of Service F
Analysis Period (min) 15	

Splits and Phases: 15: Belle Terre Blvd/Belle Terre Pkwy & SR 100

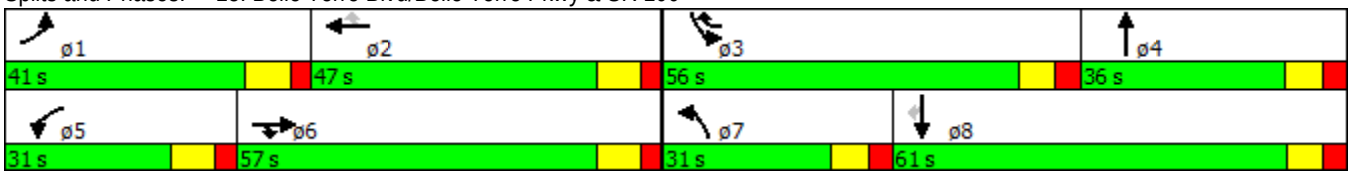

Intersection	
Int Delay, s/veh	0.7

Movement	EBL	EBR	NBL	NBT	SBT	SBR
Vol, veh/h	10	50	29	806	1298	10
Conflicting Peds, #/hr	0	0	0	0	0	0
Sign Control	Stop	Stop	Free	Free	Free	Free
RT Channelized	-	None	-	None	-	None
Storage Length	0	-	380	-	-	-
Veh in Median Storage, #	1	-	-	0	0	-
Grade, %	0	-	-	0	0	-
Peak Hour Factor	95	95	95	95	95	95
Heavy Vehicles, %	0	4	2	2	2	2
Mvmt Flow	11	53	31	848	1366	11

Major/Minor	Minor2		Major1		Major2	
Conflicting Flow All	1857	688	1377	0	-	0
Stage 1	1372	-	-	-	-	-
Stage 2	485	-	-	-	-	-
Critical Hdwy	6.8	6.98	4.14	-	-	-
Critical Hdwy Stg 1	5.8	-	-	-	-	-
Critical Hdwy Stg 2	5.8	-	-	-	-	-
Follow-up Hdwy	3.5	3.34	2.22	-	-	-
Pot Cap-1 Maneuver	67	384	494	-	-	-
Stage 1	204	-	-	-	-	-
Stage 2	591	-	-	-	-	-
Platoon blocked, %				-	-	-
Mov Cap-1 Maneuver	63	384	494	-	-	-
Mov Cap-2 Maneuver	157	-	-	-	-	-
Stage 1	204	-	-	-	-	-
Stage 2	554	-	-	-	-	-

Approach	EB	NB	SB
HCM Control Delay, s	19.6	0.4	0
HCM LOS	C		

Minor Lane/Major Mvmt	NBL	NBT	EBLn1	SBT	SBR
Capacity (veh/h)	494	-	309	-	-
HCM Lane V/C Ratio	0.062	-	0.204	-	-
HCM Control Delay (s)	12.8	-	19.6	-	-
HCM Lane LOS	B	-	C	-	-
HCM 95th %tile Q(veh)	0.2	-	0.8	-	-

Intersection	
Int Delay, s/veh	1.5

Movement	EBL	EBT	EBR	WBL	WBT	WBR	NBL	NBT	NBR	SBL	SBT	SBR
Vol, veh/h	23	4	6	35	4	17	8	739	69	40	1267	13
Conflicting Peds, #/hr	0	0	0	0	0	0	0	0	0	0	0	0
Sign Control	Stop	Stop	Stop	Stop	Stop	Stop	Free	Free	Free	Free	Free	Free
RT Channelized	-	-	None	-	-	None	-	-	None	-	-	None
Storage Length	-	-	-	300	-	-	350	-	250	400	-	-
Veh in Median Storage, #	-	1	-	-	1	-	-	0	-	-	0	-
Grade, %	-	0	-	-	0	-	-	0	-	-	0	-
Peak Hour Factor	95	95	95	95	95	95	95	95	95	95	95	95
Heavy Vehicles, %	7	0	0	4	0	38	2	2	2	2	2	2
Mvmt Flow	24	4	6	37	4	18	8	778	73	42	1334	14

Major/Minor	Minor2			Minor1			Major1			Major2		
Conflicting Flow All	1833	2220	674	1548	2227	389	1347	0	0	778	0	0
Stage 1	1425	1425	-	795	795	-	-	-	-	-	-	-
Stage 2	408	795	-	753	1432	-	-	-	-	-	-	-
Critical Hdwy	7.64	6.5	6.9	7.58	6.5	7.66	4.14	-	-	4.14	-	-
Critical Hdwy Stg 1	6.64	5.5	-	6.58	5.5	-	-	-	-	-	-	-
Critical Hdwy Stg 2	6.64	5.5	-	6.58	5.5	-	-	-	-	-	-	-
Follow-up Hdwy	3.57	4	3.3	3.54	4	3.68	2.22	-	-	2.22	-	-
Pot Cap-1 Maneuver	45	44	402	76	44	518	507	-	-	834	-	-
Stage 1	136	203	-	343	402	-	-	-	-	-	-	-
Stage 2	578	402	-	363	202	-	-	-	-	-	-	-
Platoon blocked, %								-	-		-	-
Mov Cap-1 Maneuver	40	41	402	69	41	518	507	-	-	834	-	-
Mov Cap-2 Maneuver	108	131	-	182	130	-	-	-	-	-	-	-
Stage 1	134	193	-	338	396	-	-	-	-	-	-	-
Stage 2	543	396	-	332	192	-	-	-	-	-	-	-

Approach	EB	WB	NB	SB
HCM Control Delay, s	43.3	24.8	0.1	0.3
HCM LOS	E	C		

Minor Lane/Major Mvmt	NBL	NBT	NBR	EBLn1	WBLn1	WBLn2	SBL	SBT	SBR
Capacity (veh/h)	507	-	-	128	182	330	834	-	-
HCM Lane V/C Ratio	0.017	-	-	0.271	0.202	0.067	0.05	-	-
HCM Control Delay (s)	12.2	-	-	43.3	29.7	16.7	9.5	-	-
HCM Lane LOS	B	-	-	E	D	C	A	-	-
HCM 95th %tile Q(veh)	0.1	-	-	1	0.7	0.2	0.2	-	-

Lane Group	EBL	EBT	EBR	WBL	WBT	WBR	NBL	NBT	NBR	SBL	SBT	SBR
Lane Configurations												
Volume (vph)	210	55	200	28	40	122	149	623	7	268	1092	152
Ideal Flow (vphpl)	1900	1900	1900	1900	1900	1900	1900	1900	1900	1900	1900	1900
Lane Width (ft)	12	12	12	12	12	12	12	12	12	12	12	12
Grade (%)		0%			0%			0%			0%	
Storage Length (ft)	0		100	285		0	325		450	450		275
Storage Lanes	1		1	1		1	1		1	1		1
Taper Length (ft)	50			75			50			50		
Satd. Flow (prot)	1752	1663	0	1805	1900	1615	1770	3539	1583	1770	3539	1583
Flt Permitted	0.627			0.436			0.950			0.950		
Satd. Flow (perm)	1157	1663	0	828	1900	1615	1770	3539	1583	1770	3539	1583
Right Turn on Red			Yes			Yes			Yes			Yes
Satd. Flow (RTOR)		139				216			264			202
Link Speed (mph)		40			40			45			45	
Link Distance (ft)		664			1054			1578			2742	
Travel Time (s)		11.3			18.0			23.9			41.5	
Confl. Peds. (#/hr)												
Confl. Bikes (#/hr)												
Peak Hour Factor	0.95	0.95	0.95	0.95	0.95	0.95	0.95	0.95	0.95	0.95	0.95	0.95
Growth Factor	100%	100%	100%	100%	100%	100%	100%	100%	100%	100%	100%	100%
Heavy Vehicles (%)	3%	0%	1%	0%	0%	0%	2%	2%	2%	2%	2%	2%
Bus Blockages (#/hr)	0	0	0	0	0	0	0	0	0	0	0	0
Parking (#/hr)												
Mid-Block Traffic (%)		0%			0%			0%			0%	
Shared Lane Traffic (%)												
Lane Group Flow (vph)	221	269	0	29	42	128	157	656	7	282	1149	160
Turn Type	pm+pt	NA		pm+pt	NA	Perm	Prot	NA	Perm	Prot	NA	Perm
Protected Phases	3	8		7	4		1	6		5	2	
Permitted Phases	8			4		4			6			2
Detector Phase	3	8		7	4	4	1	6	6	5	2	2
Switch Phase												
Minimum Initial (s)	5.0	5.0		5.0	5.0	5.0	5.0	15.0	15.0	5.0	15.0	15.0
Minimum Split (s)	11.4	11.4		21.6	41.6	41.6	11.8	21.8	21.8	11.8	29.8	29.8
Total Split (s)	12.0	32.0		21.6	41.6	41.6	15.0	38.4	38.4	28.0	51.4	51.4
Total Split (%)	10.0%	26.7%		18.0%	34.7%	34.7%	12.5%	32.0%	32.0%	23.3%	42.8%	42.8%
Yellow Time (s)	4.4	4.4		3.6	3.6	3.6	4.8	4.8	4.8	4.8	4.8	4.8
All-Red Time (s)	2.0	2.0		2.0	2.0	2.0	2.0	2.0	2.0	2.0	2.0	2.0
Lost Time Adjust (s)	0.0	0.0		0.0	0.0	0.0	0.0	0.0	0.0	0.0	0.0	0.0
Total Lost Time (s)	6.4	6.4		5.6	5.6	5.6	6.8	6.8	6.8	6.8	6.8	6.8
Lead/Lag	Lead	Lag		Lead	Lag	Lag	Lead	Lag	Lag	Lead	Lag	Lag
Lead-Lag Optimize?	Yes	Yes		Yes	Yes	Yes	Yes	Yes	Yes	Yes	Yes	Yes
Recall Mode	None	None		None	None	None	None	Min	Min	None	Min	Min
Act Effct Green (s)	20.8	17.8		20.4	13.4	13.4	8.4	25.6	25.6	19.7	36.9	36.9
Actuated g/C Ratio	0.23	0.20		0.22	0.15	0.15	0.09	0.28	0.28	0.22	0.41	0.41
v/c Ratio	0.73	0.61		0.11	0.15	0.30	0.96	0.66	0.01	0.73	0.80	0.21
Control Delay	47.0	24.9		25.7	35.3	1.8	106.2	33.3	0.0	48.5	29.3	2.0
Queue Delay	0.0	0.0		0.0	0.0	0.0	0.0	0.0	0.0	0.0	0.0	0.0
Total Delay	47.0	24.9		25.7	35.3	1.8	106.2	33.3	0.0	48.5	29.3	2.0
LOS	D	C		C	D	A	F	C	A	D	C	A

Lane Group	EBL	EBT	EBR	WBL	WBT	WBR	NBL	NBT	NBR	SBL	SBT	SBR
Approach Delay		34.9			12.4			47.0			29.9	
Approach LOS		C			B			D			C	

Intersection Summary	
Area Type:	Other
Cycle Length: 120	
Actuated Cycle Length: 90.8	
Natural Cycle: 115	
Control Type: Actuated-Uncoordinated	
Maximum v/c Ratio: 0.96	
Intersection Signal Delay: 34.1	Intersection LOS: C
Intersection Capacity Utilization 77.7%	ICU Level of Service D
Analysis Period (min) 15	

Splits and Phases: 18: Belle Terre Pkwy & Easthampton Blvd /Central Ave

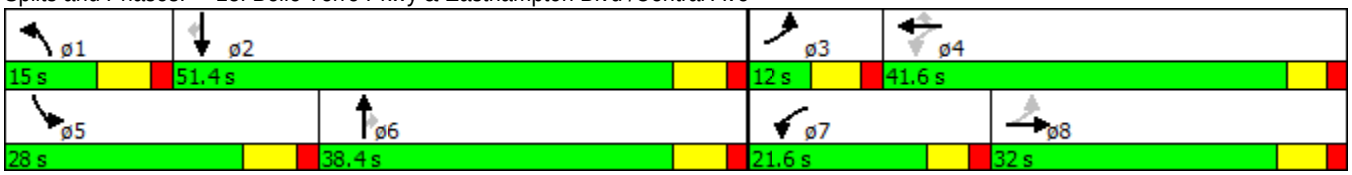

Lane Group	EBL	EBT	EBR	WBL	WBT	WBR	NBL	NBT	NBR	SBL	SBT	SBR
Lane Configurations												
Volume (vph)	27	115	193	206	226	296	169	681	105	405	1113	59
Ideal Flow (vphpl)	1900	1900	1900	1900	1900	1900	1900	1900	1900	1900	1900	1900
Lane Width (ft)	12	12	12	12	12	12	12	12	12	12	12	12
Grade (%)		0%			0%			0%			0%	
Storage Length (ft)	300		0	250		0	350		0	350		0
Storage Lanes	1		0	1		0	1		0	1		0
Taper Length (ft)	50			50			50			50		
Satd. Flow (prot)	1805	1665	0	1805	1729	0	1770	3468	0	1770	3511	0
Flt Permitted	0.117			0.385			0.950			0.950		
Satd. Flow (perm)	222	1665	0	732	1729	0	1770	3468	0	1770	3511	0
Right Turn on Red			Yes			Yes			Yes			Yes
Satd. Flow (RTOR)		70			55			14			5	
Link Speed (mph)		55			55			45			45	
Link Distance (ft)		1429			1119			2742			1415	
Travel Time (s)		17.7			13.9			41.5			21.4	
Confl. Peds. (#/hr)												
Confl. Bikes (#/hr)												
Peak Hour Factor	0.95	0.95	0.95	0.95	0.95	0.95	0.95	0.95	0.95	0.95	0.95	0.95
Growth Factor	100%	100%	100%	100%	100%	100%	100%	100%	100%	100%	100%	100%
Heavy Vehicles (%)	0%	4%	3%	0%	0%	1%	2%	2%	2%	2%	2%	2%
Bus Blockages (#/hr)	0	0	0	0	0	0	0	0	0	0	0	0
Parking (#/hr)												
Mid-Block Traffic (%)		0%			0%			0%			0%	
Shared Lane Traffic (%)												
Lane Group Flow (vph)	28	324	0	217	550	0	178	828	0	426	1234	0
Turn Type	Perm	NA		Perm	NA		Prot	NA		Prot	NA	
Protected Phases		4			8		5	2		1	6	
Permitted Phases	4			8								
Detector Phase	4	4		8	8		5	2		1	6	
Switch Phase												
Minimum Initial (s)	7.0	7.0		7.0	7.0		7.0	15.0		7.0	15.0	
Minimum Split (s)	41.0	41.0		39.0	39.0		13.8	33.8		13.8	33.8	
Total Split (s)	41.0	41.0		41.0	41.0		23.4	37.0		42.0	55.6	
Total Split (%)	34.2%	34.2%		34.2%	34.2%		19.5%	30.8%		35.0%	46.3%	
Yellow Time (s)	5.0	5.0		5.0	5.0		4.8	4.8		4.8	4.8	
All-Red Time (s)	2.0	2.0		2.0	2.0		2.0	2.0		2.0	2.0	
Lost Time Adjust (s)	0.0	0.0		0.0	0.0		0.0	0.0		0.0	0.0	
Total Lost Time (s)	7.0	7.0		7.0	7.0		6.8	6.8		6.8	6.8	
Lead/Lag							Lead	Lag		Lead	Lag	
Lead-Lag Optimize?							Yes	Yes		Yes	Yes	
Recall Mode	None	None		None	None		None	Min		None	Min	
Act Effct Green (s)	34.1	34.1		34.1	34.1		15.0	29.5		31.3	45.8	
Actuated g/C Ratio	0.29	0.29		0.29	0.29		0.13	0.26		0.27	0.40	
v/c Ratio	0.43	0.60		1.00	1.00		0.78	0.92		0.89	0.89	
Control Delay	59.1	33.3		105.9	77.0		72.4	58.5		62.2	41.2	
Queue Delay	0.0	0.0		0.0	0.0		0.0	0.0		0.0	0.0	
Total Delay	59.1	33.3		105.9	77.0		72.4	58.5		62.2	41.2	
LOS	E	C		F	E		E	E		E	D	

Lane Group	EBL	EBT	EBR	WBL	WBT	WBR	NBL	NBT	NBR	SBL	SBT	SBR
Approach Delay		35.4			85.2			61.0			46.6	
Approach LOS		D			F			E			D	

Intersection Summary	
Area Type:	Other
Cycle Length: 120	
Actuated Cycle Length: 115.6	
Natural Cycle: 100	
Control Type: Actuated-Uncoordinated	
Maximum v/c Ratio: 1.00	
Intersection Signal Delay: 57.2	Intersection LOS: E
Intersection Capacity Utilization 103.5%	ICU Level of Service G
Analysis Period (min) 15	

Splits and Phases: 19: Belle Terre Pkwy & Royal Palms Pkwy

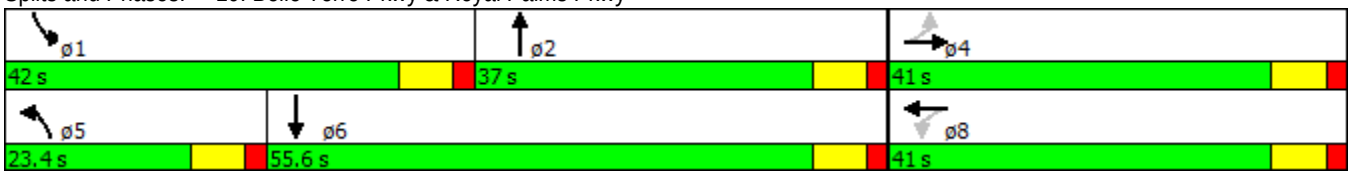

Intersection	
Int Delay, s/veh	1.6

Movement	WBL	WBR	NBT	NBR	SBL	SBT
Vol, veh/h	64	57	958	46	33	1513
Conflicting Peds, #/hr	0	0	0	0	0	0
Sign Control	Stop	Stop	Free	Free	Free	Free
RT Channelized	-	None	-	None	-	None
Storage Length	0	-	-	-	350	-
Veh in Median Storage, #	1	-	0	-	-	0
Grade, %	0	-	0	-	-	0
Peak Hour Factor	95	95	95	95	95	95
Heavy Vehicles, %	0	7	2	2	2	2
Mvmt Flow	67	60	1008	48	35	1593

Major/Minor	Minor1		Major1		Major2	
Conflicting Flow All	1899	528	0	0	1057	0
Stage 1	1033	-	-	-	-	-
Stage 2	866	-	-	-	-	-
Critical Hdwy	6.8	7.04	-	-	4.14	-
Critical Hdwy Stg 1	5.8	-	-	-	-	-
Critical Hdwy Stg 2	5.8	-	-	-	-	-
Follow-up Hdwy	3.5	3.37	-	-	2.22	-
Pot Cap-1 Maneuver	~ 62	482	-	-	655	-
Stage 1	309	-	-	-	-	-
Stage 2	377	-	-	-	-	-
Platoon blocked, %			-	-		-
Mov Cap-1 Maneuver	~ 59	482	-	-	655	-
Mov Cap-2 Maneuver	178	-	-	-	-	-
Stage 1	309	-	-	-	-	-
Stage 2	357	-	-	-	-	-

Approach	WB	NB	SB
HCM Control Delay, s	32.8	0	0.2
HCM LOS	D		

Minor Lane/Major Mvmt	NBT	NBR	WBLn1	SBL	SBT
Capacity (veh/h)	-	-	253	655	-
HCM Lane V/C Ratio	-	-	0.503	0.053	-
HCM Control Delay (s)	-	-	32.8	10.8	-
HCM Lane LOS	-	-	D	B	-
HCM 95th %tile Q(veh)	-	-	2.6	0.2	-

Notes

~: Volume exceeds capacity $: Delay exceeds 300s +: Computation Not Defined *: All major volume in platoon

Lane Group	EBL	EBR	NBL	NBT	SBT	SBR
Lane Configurations						
Volume (vph)	166	378	208	807	1168	123
Ideal Flow (vphpl)	1900	1900	1900	1900	1900	1900
Lane Width (ft)	12	12	12	12	12	12
Grade (%)	0%			0%	0%	
Storage Length (ft)	250	0	350			200
Storage Lanes	1	1	1			1
Taper Length (ft)	50		50			
Satd. Flow (prot)	1719	1599	1770	3539	3539	1583
Flt Permitted	0.950		0.099			
Satd. Flow (perm)	1719	1599	184	3539	3539	1583
Right Turn on Red		Yes				Yes
Satd. Flow (RTOR)		295				96
Link Speed (mph)	45			45	45	
Link Distance (ft)	1554			1428	1580	
Travel Time (s)	23.5			21.6	23.9	
Confl. Peds. (#/hr)						
Confl. Bikes (#/hr)						
Peak Hour Factor	0.95	0.95	0.95	0.95	0.95	0.95
Growth Factor	100%	100%	100%	100%	100%	100%
Heavy Vehicles (%)	5%	1%	2%	2%	2%	2%
Bus Blockages (#/hr)	0	0	0	0	0	0
Parking (#/hr)						
Mid-Block Traffic (%)	0%			0%	0%	
Shared Lane Traffic (%)						
Lane Group Flow (vph)	175	398	219	849	1229	129
Turn Type	Prot	Prot	pm+pt	NA	NA	Perm
Protected Phases	8	8	1	6	2	
Permitted Phases			6			2
Detector Phase	8	8	1	6	2	2
Switch Phase						
Minimum Initial (s)	6.0	6.0	6.0	15.0	15.0	15.0
Minimum Split (s)	33.8	33.8	13.0	22.0	30.0	30.0
Total Split (s)	35.0	35.0	25.0	85.0	60.0	60.0
Total Split (%)	29.2%	29.2%	20.8%	70.8%	50.0%	50.0%
Yellow Time (s)	4.8	4.8	4.8	4.8	4.8	4.8
All-Red Time (s)	2.0	2.0	2.2	2.2	2.2	2.2
Lost Time Adjust (s)	0.0	0.0	0.0	0.0	0.0	0.0
Total Lost Time (s)	6.8	6.8	7.0	7.0	7.0	7.0
Lead/Lag			Lead		Lag	Lag
Lead-Lag Optimize?			Yes		Yes	Yes
Recall Mode	None	None	None	Min	Min	Min
Act Effct Green (s)	16.1	16.1	60.6	60.6	41.2	41.2
Actuated g/C Ratio	0.18	0.18	0.66	0.66	0.45	0.45
v/c Ratio	0.58	0.76	0.66	0.36	0.77	0.17
Control Delay	45.0	21.2	26.0	7.5	25.7	6.6
Queue Delay	0.0	0.0	0.0	0.0	0.0	0.0
Total Delay	45.0	21.2	26.0	7.5	25.7	6.6
LOS	D	C	C	A	C	A

Lane Group	EBL	EBR	NBL	NBT	SBT	SBR
Approach Delay	28.4			11.3	23.9	
Approach LOS	C			B	C	

Intersection Summary	
Area Type:	Other
Cycle Length: 120	
Actuated Cycle Length: 91.2	
Natural Cycle: 90	
Control Type: Actuated-Uncoordinated	
Maximum v/c Ratio: 0.77	
Intersection Signal Delay: 20.3	Intersection LOS: C
Intersection Capacity Utilization 70.3%	ICU Level of Service C
Analysis Period (min) 15	

Splits and Phases: 21: Belle Terre Pkwy & Rymfire Dr

Intersection	
Int Delay, s/veh	2.2

Movement	WBL	WBR	NBT	NBR	SBL	SBT
Vol, veh/h	53	106	939	34	70	1238
Conflicting Peds, #/hr	0	0	0	0	0	0
Sign Control	Stop	Stop	Free	Free	Free	Free
RT Channelized	-	None	-	None	-	None
Storage Length	0	-	-	-	350	-
Veh in Median Storage, #	1	-	0	-	-	0
Grade, %	0	-	0	-	-	0
Peak Hour Factor	95	95	95	95	95	95
Heavy Vehicles, %	3	3	2	2	2	2
Mvmt Flow	56	112	988	36	74	1303

Major/Minor	Minor1		Major1		Major2	
Conflicting Flow All	1805	512	0	0	1024	0
Stage 1	1006	-	-	-	-	-
Stage 2	799	-	-	-	-	-
Critical Hdwy	6.86	6.96	-	-	4.14	-
Critical Hdwy Stg 1	5.86	-	-	-	-	-
Critical Hdwy Stg 2	5.86	-	-	-	-	-
Follow-up Hdwy	3.53	3.33	-	-	2.22	-
Pot Cap-1 Maneuver	70	504	-	-	674	-
Stage 1	312	-	-	-	-	-
Stage 2	401	-	-	-	-	-
Platoon blocked, %			-	-		-
Mov Cap-1 Maneuver	62	504	-	-	674	-
Mov Cap-2 Maneuver	180	-	-	-	-	-
Stage 1	312	-	-	-	-	-
Stage 2	357	-	-	-	-	-

Approach	WB	NB	SB
HCM Control Delay, s	28.7	0	0.6
HCM LOS	D		

Minor Lane/Major Mvmt	NBT	NBR	WBLn1	SBL	SBT
Capacity (veh/h)	-	-	315	674	-
HCM Lane V/C Ratio	-	-	0.531	0.109	-
HCM Control Delay (s)	-	-	28.7	11	-
HCM Lane LOS	-	-	D	B	-
HCM 95th %tile Q(veh)	-	-	2.9	0.4	-

Intersection	
Int Delay, s/veh	21.4

Movement	WBL	WBR	NBT	NBR	SBL	SBT
Vol, veh/h	148	163	937	108	81	1160
Conflicting Peds, #/hr	0	0	0	0	0	0
Sign Control	Stop	Stop	Free	Free	Free	Free
RT Channelized	-	None	-	None	-	None
Storage Length	0	-	-	-	350	-
Veh in Median Storage, #	1	-	0	-	-	0
Grade, %	0	-	0	-	-	0
Peak Hour Factor	95	95	95	95	95	95
Heavy Vehicles, %	1	3	2	2	2	2
Mvmt Flow	156	172	986	114	85	1221

Major/Minor	Minor1		Major1		Major2	
Conflicting Flow All	1824	550	0	0	1100	0
Stage 1	1043	-	-	-	-	-
Stage 2	781	-	-	-	-	-
Critical Hdwy	6.82	6.96	-	-	4.14	-
Critical Hdwy Stg 1	5.82	-	-	-	-	-
Critical Hdwy Stg 2	5.82	-	-	-	-	-
Follow-up Hdwy	3.51	3.33	-	-	2.22	-
Pot Cap-1 Maneuver	~ 69	476	-	-	630	-
Stage 1	303	-	-	-	-	-
Stage 2	415	-	-	-	-	-
Platoon blocked, %			-	-		-
Mov Cap-1 Maneuver	~ 60	476	-	-	630	-
Mov Cap-2 Maneuver	177	-	-	-	-	-
Stage 1	303	-	-	-	-	-
Stage 2	359	-	-	-	-	-

Approach	WB	NB	SB
HCM Control Delay, s	175.2	0	0.8
HCM LOS	F		

Minor Lane/Major Mvmt	NBT	NBR	WBLn1	SBL	SBT
Capacity (veh/h)	-	-	264	630	-
HCM Lane V/C Ratio	-	-	1.24	0.135	-
HCM Control Delay (s)	-	-	175.2	11.6	-
HCM Lane LOS	-	-	F	B	-
HCM 95th %tile Q(veh)	-	-	15.7	0.5	-

Notes

~: Volume exceeds capacity $: Delay exceeds 300s +: Computation Not Defined *: All major volume in platoon

Lane Group	EBL	EBT	EBR	WBL	WBT	WBR	NBL	NBT	NBR	SBL	SBT	SBR
Lane Configurations												
Volume (vph)	174	17	191	179	90	139	146	891	63	102	871	152
Ideal Flow (vphpl)	1900	1900	1900	1900	1900	1900	1900	1900	1900	1900	1900	1900
Lane Width (ft)	12	12	12	12	12	12	12	12	12	12	12	12
Grade (%)		0%			0%			0%			0%	
Storage Length (ft)	325		0	225		0	350		325	250		325
Storage Lanes	1		0	1		0	1		1	1		1
Taper Length (ft)	50			50			50			50		
Satd. Flow (prot)	1752	1638	0	1787	1674	0	1770	3539	1583	1770	3539	1583
Flt Permitted	0.498			0.536			0.950			0.950		
Satd. Flow (perm)	919	1638	0	1008	1674	0	1770	3539	1583	1770	3539	1583
Right Turn on Red			Yes			Yes			Yes			Yes
Satd. Flow (RTOR)		201			66				89			160
Link Speed (mph)		55			45			45			45	
Link Distance (ft)		1756			1701			1132			1277	
Travel Time (s)		21.8			25.8			17.2			19.3	
Confl. Peds. (#/hr)												
Confl. Bikes (#/hr)												
Peak Hour Factor	0.95	0.95	0.95	0.95	0.95	0.95	0.95	0.95	0.95	0.95	0.95	0.95
Growth Factor	100%	100%	100%	100%	100%	100%	100%	100%	100%	100%	100%	100%
Heavy Vehicles (%)	3%	0%	0%	1%	5%	2%	2%	2%	2%	2%	2%	2%
Bus Blockages (#/hr)	0	0	0	0	0	0	0	0	0	0	0	0
Parking (#/hr)												
Mid-Block Traffic (%)		0%			0%			0%			0%	
Shared Lane Traffic (%)												
Lane Group Flow (vph)	183	219	0	188	241	0	154	938	66	107	917	160
Turn Type	Perm	NA		Perm	NA		Prot	NA	Perm	Prot	NA	Perm
Protected Phases		8			4		5	2		1	6	
Permitted Phases	8			4					2			6
Detector Phase	8	8		4	4		5	2	2	1	6	6
Switch Phase												
Minimum Initial (s)	5.0	5.0		5.0	5.0		9.0	17.0	17.0	9.0	17.0	17.0
Minimum Split (s)	33.0	33.0		11.0	11.0		15.8	33.8	33.8	15.8	33.8	33.8
Total Split (s)	42.0	42.0		42.0	42.0		30.0	58.0	58.0	20.0	48.0	48.0
Total Split (%)	35.0%	35.0%		35.0%	35.0%		25.0%	48.3%	48.3%	16.7%	40.0%	40.0%
Yellow Time (s)	4.0	4.0		4.0	4.0		4.8	4.8	4.8	4.8	4.8	4.8
All-Red Time (s)	2.0	2.0		2.0	2.0		2.0	2.0	2.0	2.0	2.0	2.0
Lost Time Adjust (s)	0.0	0.0		0.0	0.0		0.0	0.0	0.0	0.0	0.0	0.0
Total Lost Time (s)	6.0	6.0		6.0	6.0		6.8	6.8	6.8	6.8	6.8	6.8
Lead/Lag							Lead	Lag	Lag	Lead	Lag	Lag
Lead-Lag Optimize?							Yes	Yes	Yes	Yes	Yes	Yes
Recall Mode	None	None		None	None		None	Min	Min	None	Min	Min
Act Effct Green (s)	23.9	23.9		23.9	23.9		14.2	38.9	38.9	11.4	31.3	31.3
Actuated g/C Ratio	0.26	0.26		0.26	0.26		0.16	0.43	0.43	0.13	0.35	0.35
v/c Ratio	0.75	0.38		0.70	0.49		0.55	0.62	0.09	0.48	0.75	0.25
Control Delay	52.7	7.6		47.3	24.8		47.1	24.7	2.6	50.7	31.6	5.2
Queue Delay	0.0	0.0		0.0	0.0		0.0	0.0	0.0	0.0	0.0	0.0
Total Delay	52.7	7.6		47.3	24.8		47.1	24.7	2.6	50.7	31.6	5.2
LOS	D	A		D	C		D	C	A	D	C	A

Lane Group	EBL	EBT	EBR	WBL	WBT	WBR	NBL	NBT	NBR	SBL	SBT	SBR
Approach Delay		28.2			34.6			26.4			29.7	
Approach LOS		C			C			C			C	

Intersection Summary	
Area Type:	Other
Cycle Length: 120	
Actuated Cycle Length: 90.2	
Natural Cycle: 85	
Control Type: Actuated-Uncoordinated	
Maximum v/c Ratio: 0.75	
Intersection Signal Delay: 29.0	Intersection LOS: C
Intersection Capacity Utilization 76.4%	ICU Level of Service D
Analysis Period (min) 15	

Splits and Phases: 24: Belle Terre Pkwy & Whiteview Pkwy

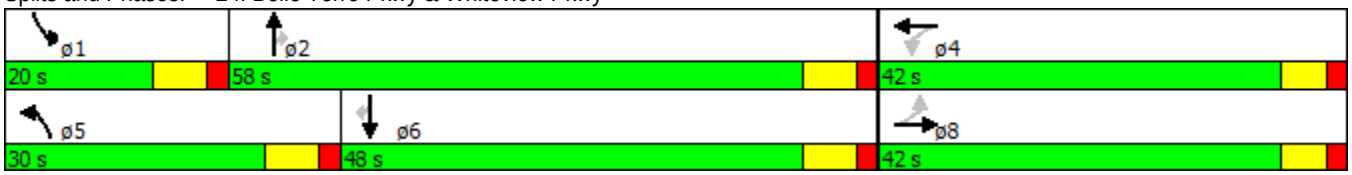

Intersection	
Int Delay, s/veh	2.8

Movement	EBL	EBR	NBL	NBT	SBT	SBR
Vol, veh/h	77	73	52	1152	1052	49
Conflicting Peds, #/hr	0	0	0	0	0	0
Sign Control	Stop	Stop	Free	Free	Free	Free
RT Channelized	-	None	-	None	-	None
Storage Length	0	-	175	-	-	-
Veh in Median Storage, #	1	-	-	0	0	-
Grade, %	0	-	-	0	0	-
Peak Hour Factor	95	95	95	95	95	95
Heavy Vehicles, %	2	0	2	2	2	2
Mvmt Flow	81	77	55	1213	1107	52

Major/Minor	Minor2		Major1		Major2	
Conflicting Flow All	1849	579	1159	0	-	0
Stage 1	1133	-	-	-	-	-
Stage 2	716	-	-	-	-	-
Critical Hdwy	6.84	6.9	4.14	-	-	-
Critical Hdwy Stg 1	5.84	-	-	-	-	-
Critical Hdwy Stg 2	5.84	-	-	-	-	-
Follow-up Hdwy	3.52	3.3	2.22	-	-	-
Pot Cap-1 Maneuver	~ 66	463	599	-	-	-
Stage 1	269	-	-	-	-	-
Stage 2	445	-	-	-	-	-
Platoon blocked, %				-	-	-
Mov Cap-1 Maneuver	~ 60	463	599	-	-	-
Mov Cap-2 Maneuver	173	-	-	-	-	-
Stage 1	269	-	-	-	-	-
Stage 2	404	-	-	-	-	-

Approach	EB	NB	SB
HCM Control Delay, s	41.6	0.5	0
HCM LOS	E		

Minor Lane/Major Mvmt	NBL	NBT	EBLn1	SBT	SBR
Capacity (veh/h)	599	-	249	-	-
HCM Lane V/C Ratio	0.091	-	0.634	-	-
HCM Control Delay (s)	11.6	-	41.6	-	-
HCM Lane LOS	B	-	E	-	-
HCM 95th %tile Q(veh)	0.3	-	3.9	-	-

Notes

~: Volume exceeds capacity $: Delay exceeds 300s +: Computation Not Defined *: All major volume in platoon

Intersection	
Int Delay, s/veh	5.8

Movement	WBL	WBR	NBT	NBR	SBL	SBT
Vol, veh/h	54	183	1187	42	66	1047
Conflicting Peds, #/hr	0	0	0	0	0	0
Sign Control	Stop	Stop	Free	Free	Free	Free
RT Channelized	-	None	-	None	-	None
Storage Length	0	-	-	-	175	-
Veh in Median Storage, #	1	-	0	-	-	0
Grade, %	0	-	0	-	-	0
Peak Hour Factor	95	95	95	95	95	95
Heavy Vehicles, %	2	4	2	2	2	2
Mvmt Flow	57	193	1249	44	69	1102

Major/Minor	Minor1		Major1		Major2	
Conflicting Flow All	1962	647	0	0	1294	0
Stage 1	1272	-	-	-	-	-
Stage 2	690	-	-	-	-	-
Critical Hdwy	6.84	6.98	-	-	4.14	-
Critical Hdwy Stg 1	5.84	-	-	-	-	-
Critical Hdwy Stg 2	5.84	-	-	-	-	-
Follow-up Hdwy	3.52	3.34	-	-	2.22	-
Pot Cap-1 Maneuver	~ 55	409	-	-	531	-
Stage 1	227	-	-	-	-	-
Stage 2	459	-	-	-	-	-
Platoon blocked, %			-	-		-
Mov Cap-1 Maneuver	~ 48	409	-	-	531	-
Mov Cap-2 Maneuver	152	-	-	-	-	-
Stage 1	227	-	-	-	-	-
Stage 2	399	-	-	-	-	-

Approach	WB	NB	SB
HCM Control Delay, s	59	0	0.8
HCM LOS	F		

Minor Lane/Major Mvmt	NBT	NBR	WBLn1	SBL	SBT
Capacity (veh/h)	-	-	295	531	-
HCM Lane V/C Ratio	-	-	0.846	0.131	-
HCM Control Delay (s)	-	-	59	12.8	-
HCM Lane LOS	-	-	F	B	-
HCM 95th %tile Q(veh)	-	-	7.2	0.4	-

Notes

~: Volume exceeds capacity $: Delay exceeds 300s +: Computation Not Defined *: All major volume in platoon

Lane Group	WBL	WBR	NBT	NBR	SBL	SBT
Lane Configurations						
Volume (vph)	33	29	1335	35	200	1080
Ideal Flow (vphpl)	1900	1900	1900	1900	1900	1900
Lane Width (ft)	12	12	12	12	12	12
Grade (%)	0%		0%			0%
Storage Length (ft)	0	0		390	500	
Storage Lanes	1	1		1	1	
Taper Length (ft)	25				50	
Satd. Flow (prot)	1188	1468	3539	1583	1770	3539
Flt Permitted	0.950				0.101	
Satd. Flow (perm)	1188	1468	3539	1583	188	3539
Right Turn on Red		Yes		Yes		
Satd. Flow (RTOR)		31		37		
Link Speed (mph)	30		45			45
Link Distance (ft)	362		2373			662
Travel Time (s)	8.2		36.0			10.0
Confl. Peds. (#/hr)						
Confl. Bikes (#/hr)						
Peak Hour Factor	0.95	0.95	0.95	0.95	0.95	0.95
Growth Factor	100%	100%	100%	100%	100%	100%
Heavy Vehicles (%)	52%	10%	2%	2%	2%	2%
Bus Blockages (#/hr)	0	0	0	0	0	0
Parking (#/hr)						
Mid-Block Traffic (%)	0%		0%			0%
Shared Lane Traffic (%)						
Lane Group Flow (vph)	35	31	1405	37	211	1137
Turn Type	Prot	Prot	NA	Perm	pm+pt	NA
Protected Phases	4	4	6		5	2
Permitted Phases				6	2	
Detector Phase	4	4	6	6	5	2
Switch Phase						
Minimum Initial (s)	12.0	12.0	15.0	15.0	4.0	15.0
Minimum Split (s)	47.0	47.0	35.0	35.0	9.0	20.0
Total Split (s)	47.0	47.0	49.0	49.0	14.0	63.0
Total Split (%)	42.7%	42.7%	44.5%	44.5%	12.7%	57.3%
Yellow Time (s)	4.0	4.0	4.0	4.0	4.0	4.0
All-Red Time (s)	1.0	1.0	1.0	1.0	1.0	1.0
Lost Time Adjust (s)	0.0	0.0	0.0	0.0	0.0	0.0
Total Lost Time (s)	5.0	5.0	5.0	5.0	5.0	5.0
Lead/Lag			Lag	Lag	Lead	
Lead-Lag Optimize?			Yes	Yes	Yes	
Recall Mode	None	None	Min	Min	None	Min
Act Effct Green (s)	12.6	12.6	40.3	40.3	54.9	57.6
Actuated g/C Ratio	0.18	0.18	0.58	0.58	0.80	0.83
v/c Ratio	0.16	0.11	0.68	0.04	0.58	0.39
Control Delay	31.4	12.7	13.4	3.3	17.8	3.7
Queue Delay	0.0	0.0	0.0	0.0	0.0	0.0
Total Delay	31.4	12.7	13.4	3.3	17.8	3.7
LOS	C	B	B	A	B	A

Lane Group	WBL	WBR	NBT	NBR	SBL	SBT
Approach Delay	22.6		13.1			5.9
Approach LOS	C		B			A

Intersection Summary	
Area Type:	Other
Cycle Length: 110	
Actuated Cycle Length: 69	
Natural Cycle: 95	
Control Type: Actuated-Uncoordinated	
Maximum v/c Ratio: 0.68	
Intersection Signal Delay: 9.9	Intersection LOS: A
Intersection Capacity Utilization 70.5%	ICU Level of Service C
Analysis Period (min) 15	

Splits and Phases: 27: Belle Terre Pkwy & School Entrance

Lane Group	WBL	WBR	NBT	NBR	SBL	SBT	ø4
Lane Configurations							
Volume (vph)	315	259	1259	105	90	965	
Ideal Flow (vphpl)	1900	1900	1900	1900	1900	1900	
Lane Width (ft)	12	12	12	12	12	12	
Grade (%)	0%		0%			0%	
Storage Length (ft)	275	0		0	175		
Storage Lanes	1	1		0	1		
Taper Length (ft)	25				50		
Satd. Flow (prot)	1752	1615	3497	0	1770	3539	
Flt Permitted	0.950				0.087		
Satd. Flow (perm)	1752	1615	3497	0	162	3539	
Right Turn on Red		Yes		Yes			
Satd. Flow (RTOR)		273	7				
Link Speed (mph)	30		45			45	
Link Distance (ft)	890		234			3685	
Travel Time (s)	20.2		3.5			55.8	
Confl. Peds. (#/hr)							
Confl. Bikes (#/hr)							
Peak Hour Factor	0.95	0.95	0.95	0.95	0.95	0.95	
Growth Factor	100%	100%	100%	100%	100%	100%	
Heavy Vehicles (%)	3%	0%	2%	2%	2%	2%	
Bus Blockages (#/hr)	0	0	0	0	0	0	
Parking (#/hr)							
Mid-Block Traffic (%)	0%		0%			0%	
Shared Lane Traffic (%)							
Lane Group Flow (vph)	332	273	1436	0	95	1016	
Turn Type	Prot	Prot	NA		pm+pt	NA	
Protected Phases	3	3	6		5	2	4
Permitted Phases					2		
Detector Phase	3	3	6		5	2	
Switch Phase							
Minimum Initial (s)	4.0	4.0	10.0		4.0	10.0	1.0
Minimum Split (s)	9.0	9.0	47.0		8.0	15.0	47.0
Total Split (s)	28.0	28.0	47.0		8.0	55.0	47.0
Total Split (%)	21.5%	21.5%	36.2%		6.2%	42.3%	36%
Yellow Time (s)	4.0	4.0	4.0		3.0	4.0	4.0
All-Red Time (s)	1.0	1.0	1.0		1.0	1.0	1.0
Lost Time Adjust (s)	0.0	0.0	0.0		0.0	0.0	
Total Lost Time (s)	5.0	5.0	5.0		4.0	5.0	
Lead/Lag	Lead	Lead	Lag		Lead		Lag
Lead-Lag Optimize?	Yes	Yes	Yes		Yes		Yes
Recall Mode	None	None	Max		None	Max	None
Act Effct Green (s)	23.0	23.0	42.0		51.0	50.0	
Actuated g/C Ratio	0.28	0.28	0.51		0.61	0.60	
v/c Ratio	0.68	0.42	0.81		0.54	0.48	
Control Delay	35.2	5.5	21.7		18.9	10.1	
Queue Delay	0.0	0.0	0.0		0.0	0.0	
Total Delay	35.2	5.5	21.7		18.9	10.1	
LOS	D	A	C		B	B	

Lane Group	WBL	WBR	NBT	NBR	SBL	SBT	ø4
Approach Delay	21.8		21.7			10.9	
Approach LOS	C		C			B	

Intersection Summary	
Area Type:	Other
Cycle Length: 130	
Actuated Cycle Length: 83	
Natural Cycle: 145	
Control Type: Semi Act-Uncoord	
Maximum v/c Ratio: 0.81	
Intersection Signal Delay: 17.9	Intersection LOS: B
Intersection Capacity Utilization 72.2%	ICU Level of Service C
Analysis Period (min) 15	

Splits and Phases: 28: Belle Terre Pkwy & Parkview Dr (S)

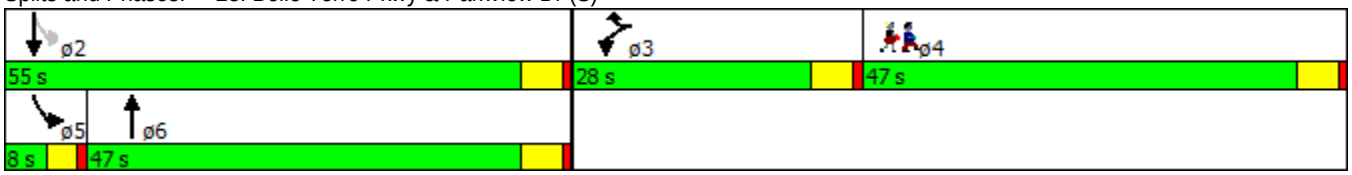

Intersection	
Int Delay, s/veh	4.6

Movement	SEL	SET	NWT	NWR	SWL	SWR
Vol, veh/h	98	1020	1493	25	35	145
Conflicting Peds, #/hr	0	0	0	0	0	0
Sign Control	Free	Free	Free	Free	Stop	Stop
RT Channelized	-	None	-	None	-	None
Storage Length	450	-	-	425	0	-
Veh in Median Storage, #	-	0	0	-	1	-
Grade, %	-	0	0	-	0	-
Peak Hour Factor	95	95	95	95	95	95
Heavy Vehicles, %	5	3	2	2	2	2
Mvmt Flow	103	1074	1572	26	37	153

Major/Minor	Major1		Major2		Minor2	
Conflicting Flow All	1572	0	-	0	2315	786
Stage 1	-	-	-	-	1572	-
Stage 2	-	-	-	-	743	-
Critical Hdwy	4.2	-	-	-	6.84	6.94
Critical Hdwy Stg 1	-	-	-	-	5.84	-
Critical Hdwy Stg 2	-	-	-	-	5.84	-
Follow-up Hdwy	2.25	-	-	-	3.52	3.32
Pot Cap-1 Maneuver	401	-	-	-	~ 32	335
Stage 1	-	-	-	-	156	-
Stage 2	-	-	-	-	431	-
Platoon blocked, %		-	-	-		
Mov Cap-1 Maneuver	401	-	-	-	~ 24	335
Mov Cap-2 Maneuver	-	-	-	-	105	-
Stage 1	-	-	-	-	156	-
Stage 2	-	-	-	-	320	-

Approach	SE	NW	SW
HCM Control Delay, s	1.5	0	63.1
HCM LOS			F

Minor Lane/Major Mvmt	NWT	NWR	SEL	SETSWLn1	
Capacity (veh/h)	-	-	401	-	235
HCM Lane V/C Ratio	-	-	0.257	-	0.806
HCM Control Delay (s)	-	-	17.1	-	63.1
HCM Lane LOS	-	-	C	-	F
HCM 95th %tile Q(veh)	-	-	1	-	6.1

Notes

~: Volume exceeds capacity $: Delay exceeds 300s +: Computation Not Defined *: All major volume in platoon

Lane Group	SET	SER	NWL	NWT	NEL	NER
Lane Configurations						
Volume (vph)	963	215	133	1505	530	155
Ideal Flow (vphpl)	1900	1900	1900	1900	1900	1900
Lane Width (ft)	12	12	12	12	12	12
Grade (%)	0%			0%	0%	
Storage Length (ft)		325	175		225	225
Storage Lanes		1	1		1	1
Taper Length (ft)			100		100	
Satd. Flow (prot)	3505	1583	1770	3539	3433	1583
Flt Permitted			0.124		0.950	
Satd. Flow (perm)	3505	1583	231	3539	3433	1583
Right Turn on Red		Yes				Yes
Satd. Flow (RTOR)		226				163
Link Speed (mph)	45			45	45	
Link Distance (ft)	1316			361	1297	
Travel Time (s)	19.9			5.5	19.7	
Confl. Peds. (#/hr)						
Confl. Bikes (#/hr)						
Peak Hour Factor	0.95	0.95	0.95	0.95	0.95	0.95
Growth Factor	100%	100%	100%	100%	100%	100%
Heavy Vehicles (%)	3%	2%	2%	2%	2%	2%
Bus Blockages (#/hr)	0	0	0	0	0	0
Parking (#/hr)						
Mid-Block Traffic (%)	0%			0%	0%	
Shared Lane Traffic (%)						
Lane Group Flow (vph)	1014	226	140	1584	558	163
Turn Type	NA	Perm	pm+pt	NA	Prot	Prot
Protected Phases	6		5	2	4	4
Permitted Phases		6	2			
Detector Phase	6	6	5	2	4	4
Switch Phase						
Minimum Initial (s)	20.0	20.0	4.0	20.0	6.0	6.0
Minimum Split (s)	26.8	26.8	11.0	27.0	31.8	31.8
Total Split (s)	39.0	39.0	15.0	54.0	36.0	36.0
Total Split (%)	43.3%	43.3%	16.7%	60.0%	40.0%	40.0%
Yellow Time (s)	4.8	4.8	4.8	4.8	4.8	4.8
All-Red Time (s)	2.0	2.0	2.2	2.2	2.0	2.0
Lost Time Adjust (s)	0.0	0.0	0.0	0.0	0.0	0.0
Total Lost Time (s)	6.8	6.8	7.0	7.0	6.8	6.8
Lead/Lag	Lag	Lag	Lead			
Lead-Lag Optimize?	Yes	Yes	Yes			
Recall Mode	Min	Min	None	Min	None	None
Act Effct Green (s)	28.0	28.0	42.6	42.6	17.7	17.7
Actuated g/C Ratio	0.38	0.38	0.57	0.57	0.24	0.24
v/c Ratio	0.77	0.31	0.48	0.78	0.68	0.33
Control Delay	25.4	3.9	14.1	16.2	30.9	6.2
Queue Delay	0.0	0.0	0.0	0.0	0.0	0.0
Total Delay	25.4	3.9	14.1	16.2	30.9	6.2
LOS	C	A	B	B	C	A

Lane Group	SET	SER	NWL	NWT	NEL	NER
Approach Delay	21.5			16.1	25.3	
Approach LOS	C			B	C	

Intersection Summary	
Area Type:	Other
Cycle Length: 90	
Actuated Cycle Length: 74.4	
Natural Cycle: 75	
Control Type: Actuated-Uncoordinated	
Maximum v/c Ratio: 0.78	
Intersection Signal Delay: 19.7	Intersection LOS: B
Intersection Capacity Utilization 68.2%	ICU Level of Service C
Analysis Period (min) 15	

Splits and Phases: 30: Pine Lakes Pkwy & Belle Terre Pkwy

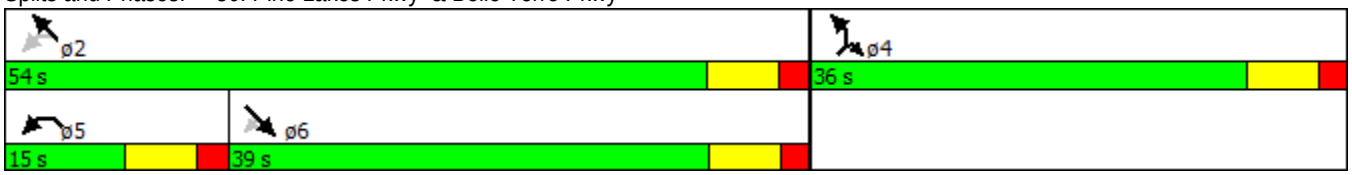

Lane Group	WBL	WBR	NBT	NBR	SBL	SBT
Lane Configurations						
Volume (vph)	217	45	1097	330	67	600
Ideal Flow (vphpl)	1900	1900	1900	1900	1900	1900
Lane Width (ft)	12	12	12	12	12	12
Grade (%)	0%		0%			0%
Storage Length (ft)	0	400		200	450	
Storage Lanes	1	1		1	1	
Taper Length (ft)	25				50	
Satd. Flow (prot)	1770	1583	3539	1615	1805	3539
Flt Permitted	0.950				0.950	
Satd. Flow (perm)	1770	1583	3539	1615	1805	3539
Right Turn on Red		Yes		Yes		
Satd. Flow (RTOR)		47		325		
Link Speed (mph)	50		60			60
Link Distance (ft)	1054		1255			1357
Travel Time (s)	14.4		14.3			15.4
Confl. Peds. (#/hr)						
Confl. Bikes (#/hr)						
Peak Hour Factor	0.95	0.95	0.95	0.95	0.95	0.95
Growth Factor	100%	100%	100%	100%	100%	100%
Heavy Vehicles (%)	2%	2%	2%	0%	0%	2%
Bus Blockages (#/hr)	0	0	0	0	0	0
Parking (#/hr)						
Mid-Block Traffic (%)	0%		0%			0%
Shared Lane Traffic (%)						
Lane Group Flow (vph)	228	47	1155	347	71	632
Turn Type	Prot	Prot	NA	Prot	Prot	NA
Protected Phases	4	4	6	6	5	2
Permitted Phases						
Detector Phase	4	4	6	6	5	2
Switch Phase						
Minimum Initial (s)	8.0	8.0	15.0	15.0	6.0	15.0
Minimum Split (s)	16.1	16.1	23.9	23.9	14.9	23.9
Total Split (s)	30.0	30.0	42.0	42.0	18.0	60.0
Total Split (%)	33.3%	33.3%	46.7%	46.7%	20.0%	66.7%
Yellow Time (s)	5.1	5.1	5.9	5.9	5.9	5.9
All-Red Time (s)	3.0	3.0	3.0	3.0	3.0	3.0
Lost Time Adjust (s)	0.0	0.0	0.0	0.0	0.0	0.0
Total Lost Time (s)	8.1	8.1	8.9	8.9	8.9	8.9
Lead/Lag			Lag	Lag	Lead	
Lead-Lag Optimize?			Yes	Yes	Yes	
Recall Mode	None	None	Min	Min	None	Min
Act Effct Green (s)	15.5	15.5	30.5	30.5	8.2	43.1
Actuated g/C Ratio	0.20	0.20	0.40	0.40	0.11	0.56
v/c Ratio	0.64	0.13	0.82	0.41	0.37	0.32
Control Delay	39.2	9.5	28.7	4.8	42.3	9.3
Queue Delay	0.0	0.0	0.0	0.0	0.0	0.0
Total Delay	39.2	9.5	28.7	4.8	42.3	9.3
LOS	D	A	C	A	D	A

Lane Group	WBL	WBR	NBT	NBR	SBL	SBT
Approach Delay	34.1		23.1			12.6
Approach LOS	C		C			B

Intersection Summary	
Area Type:	Other
Cycle Length: 90	
Actuated Cycle Length: 76.7	
Natural Cycle: 70	
Control Type: Actuated-Uncoordinated	
Maximum v/c Ratio: 0.82	
Intersection Signal Delay: 21.4	Intersection LOS: C
Intersection Capacity Utilization 68.9%	ICU Level of Service C
Analysis Period (min) 15	

Splits and Phases: 1: SR 5 (US 1) & Belle Terre Blvd

Intersection	
Int Delay, s/veh	1.2

Movement	EBL	EBT	EBR	WBL	WBT	WBR	NBL	NBT	NBR	SBL	SBT	SBR
Vol, veh/h	23	364	10	4	242	41	2	1	4	23	1	18
Conflicting Peds, #/hr	0	0	0	0	0	0	0	0	0	0	0	0
Sign Control	Free	Free	Free	Free	Free	Free	Stop	Stop	Stop	Stop	Stop	Stop
RT Channelized	-	-	None	-	-	None	-	-	None	-	-	None
Storage Length	-	-	-	-	-	-	-	-	-	-	-	-
Veh in Median Storage, #	-	0	-	-	0	-	-	0	-	-	0	-
Grade, %	-	0	-	-	0	-	-	0	-	-	0	-
Peak Hour Factor	95	95	95	95	95	95	95	95	95	95	95	95
Heavy Vehicles, %	2	2	2	2	2	2	0	0	0	0	0	0
Mvmt Flow	24	383	11	4	255	43	2	1	4	24	1	19

Major/Minor	Major1			Major2			Minor1			Minor2		
Conflicting Flow All	298	0	0	394	0	0	732	743	388	724	727	276
Stage 1	-	-	-	-	-	-	437	437	-	285	285	-
Stage 2	-	-	-	-	-	-	295	306	-	439	442	-
Critical Hdwy	4.12	-	-	4.12	-	-	7.1	6.5	6.2	7.1	6.5	6.2
Critical Hdwy Stg 1	-	-	-	-	-	-	6.1	5.5	-	6.1	5.5	-
Critical Hdwy Stg 2	-	-	-	-	-	-	6.1	5.5	-	6.1	5.5	-
Follow-up Hdwy	2.218	-	-	2.218	-	-	3.5	4	3.3	3.5	4	3.3
Pot Cap-1 Maneuver	1263	-	-	1165	-	-	339	346	665	344	353	768
Stage 1	-	-	-	-	-	-	602	583	-	727	679	-
Stage 2	-	-	-	-	-	-	718	665	-	601	580	-
Platoon blocked, %		-	-		-	-						
Mov Cap-1 Maneuver	1263	-	-	1165	-	-	323	336	665	334	343	768
Mov Cap-2 Maneuver	-	-	-	-	-	-	323	336	-	334	343	-
Stage 1	-	-	-	-	-	-	588	569	-	710	676	-
Stage 2	-	-	-	-	-	-	696	662	-	582	566	-

Approach	EB	WB	NB	SB
HCM Control Delay, s	0.5	0.1	12.9	14.1
HCM LOS			B	B

Minor Lane/Major Mvmt	NBLn1	EBL	EBT	EBR	WBL	WBT	WBR	SBLn1
Capacity (veh/h)	461	1263	-	-	1165	-	-	441
HCM Lane V/C Ratio	0.016	0.019	-	-	0.004	-	-	0.1
HCM Control Delay (s)	12.9	7.9	0	-	8.1	0	-	14.1
HCM Lane LOS	B	A	A	-	A	A	-	B
HCM 95th %tile Q(veh)	0	0.1	-	-	0	-	-	0.3

Intersection	
Int Delay, s/veh	0.3

Movement	EBT	EBR	WBL	WBT	NBL	NBR
Vol, veh/h	375	16	8	281	6	5
Conflicting Peds, #/hr	0	0	0	0	0	0
Sign Control	Free	Free	Free	Free	Stop	Stop
RT Channelized	-	None	-	None	-	None
Storage Length	-	-	-	-	0	-
Veh in Median Storage, #	0	-	-	0	0	-
Grade, %	0	-	-	0	0	-
Peak Hour Factor	95	95	95	95	95	95
Heavy Vehicles, %	2	2	2	2	0	0
Mvmt Flow	395	17	8	296	6	5

Major/Minor	Major1		Major2		Minor1	
Conflicting Flow All	0	0	412	0	716	403
Stage 1	-	-	-	-	403	-
Stage 2	-	-	-	-	313	-
Critical Hdwy	-	-	4.12	-	6.4	6.2
Critical Hdwy Stg 1	-	-	-	-	5.4	-
Critical Hdwy Stg 2	-	-	-	-	5.4	-
Follow-up Hdwy	-	-	2.218	-	3.5	3.3
Pot Cap-1 Maneuver	-	-	1147	-	400	652
Stage 1	-	-	-	-	679	-
Stage 2	-	-	-	-	746	-
Platoon blocked, %	-	-		-		
Mov Cap-1 Maneuver	-	-	1147	-	397	652
Mov Cap-2 Maneuver	-	-	-	-	397	-
Stage 1	-	-	-	-	679	-
Stage 2	-	-	-	-	740	-

Approach	EB	WB	NB
HCM Control Delay, s	0	0.2	12.6
HCM LOS			B

Minor Lane/Major Mvmt	NBLn1	EBT	EBR	WBL	WBT
Capacity (veh/h)	483	-	-	1147	-
HCM Lane V/C Ratio	0.024	-	-	0.007	-
HCM Control Delay (s)	12.6	-	-	8.2	0
HCM Lane LOS	B	-	-	A	A
HCM 95th %tile Q(veh)	0.1	-	-	0	-

Intersection	
Int Delay, s/veh	0.7

Movement	EBL	EBT	EBR	WBL	WBT	WBR	NBL	NBT	NBR	SBL	SBT	SBR
Vol, veh/h	7	364	9	14	276	11	6	1	7	6	1	7
Conflicting Peds, #/hr	0	0	0	0	0	0	0	0	0	0	0	0
Sign Control	Free	Free	Free	Free	Free	Free	Stop	Stop	Stop	Stop	Stop	Stop
RT Channelized	-	-	None	-	-	None	-	-	None	-	-	None
Storage Length	-	-	-	-	-	-	-	-	-	-	-	-
Veh in Median Storage, #	-	0	-	-	0	-	-	0	-	-	0	-
Grade, %	-	0	-	-	0	-	-	0	-	-	0	-
Peak Hour Factor	95	95	95	95	95	95	95	95	95	95	95	95
Heavy Vehicles, %	2	2	2	2	2	2	0	0	0	0	0	0
Mvmt Flow	7	383	9	15	291	12	6	1	7	6	1	7

Major/Minor	Major1			Major2			Minor1			Minor2		
Conflicting Flow All	302	0	0	393	0	0	733	735	388	733	733	296
Stage 1	-	-	-	-	-	-	403	403	-	326	326	-
Stage 2	-	-	-	-	-	-	330	332	-	407	407	-
Critical Hdwy	4.12	-	-	4.12	-	-	7.1	6.5	6.2	7.1	6.5	6.2
Critical Hdwy Stg 1	-	-	-	-	-	-	6.1	5.5	-	6.1	5.5	-
Critical Hdwy Stg 2	-	-	-	-	-	-	6.1	5.5	-	6.1	5.5	-
Follow-up Hdwy	2.218	-	-	2.218	-	-	3.5	4	3.3	3.5	4	3.3
Pot Cap-1 Maneuver	1259	-	-	1166	-	-	339	349	665	339	350	748
Stage 1	-	-	-	-	-	-	628	603	-	691	652	-
Stage 2	-	-	-	-	-	-	687	648	-	625	601	-
Platoon blocked, %		-	-		-	-						
Mov Cap-1 Maneuver	1259	-	-	1166	-	-	329	341	665	329	342	748
Mov Cap-2 Maneuver	-	-	-	-	-	-	329	341	-	329	342	-
Stage 1	-	-	-	-	-	-	624	599	-	686	642	-
Stage 2	-	-	-	-	-	-	669	638	-	613	597	-

Approach	EB	WB	NB	SB
HCM Control Delay, s	0.1	0.4	13.4	13.1
HCM LOS			B	B

Minor Lane/Major Mvmt	NBLn1	EBL	EBT	EBR	WBL	WBT	WBR	SBLn1
Capacity (veh/h)	442	1259	-	-	1166	-	-	459
HCM Lane V/C Ratio	0.033	0.006	-	-	0.013	-	-	0.032
HCM Control Delay (s)	13.4	7.9	0	-	8.1	0	-	13.1
HCM Lane LOS	B	A	A	-	A	A	-	B
HCM 95th %tile Q(veh)	0.1	0	-	-	0	-	-	0.1

Intersection	
Int Delay, s/veh	1.2

Movement	EBT	EBR	WBL	WBT	NBL	NBR
Vol, veh/h	364	13	29	293	8	47
Conflicting Peds, #/hr	0	0	0	0	0	0
Sign Control	Free	Free	Free	Free	Stop	Stop
RT Channelized	-	None	-	None	-	None
Storage Length	-	-	-	-	0	-
Veh in Median Storage, #	0	-	-	0	0	-
Grade, %	0	-	-	0	0	-
Peak Hour Factor	95	95	95	95	95	95
Heavy Vehicles, %	2	2	2	2	0	0
Mvmt Flow	383	14	31	308	8	49

Major/Minor	Major1		Major2		Minor1	
Conflicting Flow All	0	0	397	0	759	390
Stage 1	-	-	-	-	390	-
Stage 2	-	-	-	-	369	-
Critical Hdwy	-	-	4.12	-	6.4	6.2
Critical Hdwy Stg 1	-	-	-	-	5.4	-
Critical Hdwy Stg 2	-	-	-	-	5.4	-
Follow-up Hdwy	-	-	2.218	-	3.5	3.3
Pot Cap-1 Maneuver	-	-	1162	-	377	663
Stage 1	-	-	-	-	689	-
Stage 2	-	-	-	-	704	-
Platoon blocked, %	-	-		-		
Mov Cap-1 Maneuver	-	-	1162	-	365	663
Mov Cap-2 Maneuver	-	-	-	-	365	-
Stage 1	-	-	-	-	689	-
Stage 2	-	-	-	-	681	-

Approach	EB	WB	NB
HCM Control Delay, s	0	0.7	11.7
HCM LOS			B

Minor Lane/Major Mvmt	NBLn1	EBT	EBR	WBL	WBT
Capacity (veh/h)	593	-	-	1162	-
HCM Lane V/C Ratio	0.098	-	-	0.026	-
HCM Control Delay (s)	11.7	-	-	8.2	0
HCM Lane LOS	B	-	-	A	A
HCM 95th %tile Q(veh)	0.3	-	-	0.1	-

Intersection	
Int Delay, s/veh	1

Movement	WBL	WBR	NBT	NBR	SBL	SBT
Vol, veh/h	14	40	382	35	16	312
Conflicting Peds, #/hr	0	0	0	0	0	0
Sign Control	Stop	Stop	Free	Free	Free	Free
RT Channelized	-	None	-	None	-	None
Storage Length	0	-	-	-	-	-
Veh in Median Storage, #	0	-	0	-	-	0
Grade, %	0	-	0	-	-	0
Peak Hour Factor	95	95	95	95	95	95
Heavy Vehicles, %	0	0	2	2	2	2
Mvmt Flow	15	42	402	37	17	328

Major/Minor	Minor1		Major1		Major2	
Conflicting Flow All	783	421	0	0	439	0
Stage 1	421	-	-	-	-	-
Stage 2	362	-	-	-	-	-
Critical Hdwy	6.4	6.2	-	-	4.12	-
Critical Hdwy Stg 1	5.4	-	-	-	-	-
Critical Hdwy Stg 2	5.4	-	-	-	-	-
Follow-up Hdwy	3.5	3.3	-	-	2.218	-
Pot Cap-1 Maneuver	365	637	-	-	1121	-
Stage 1	667	-	-	-	-	-
Stage 2	709	-	-	-	-	-
Platoon blocked, %			-	-		-
Mov Cap-1 Maneuver	358	637	-	-	1121	-
Mov Cap-2 Maneuver	358	-	-	-	-	-
Stage 1	667	-	-	-	-	-
Stage 2	696	-	-	-	-	-

Approach	WB	NB	SB
HCM Control Delay, s	12.6	0	0.4
HCM LOS	B		

Minor Lane/Major Mvmt	NBT	NBR	WBLn1	SBL	SBT
Capacity (veh/h)	-	-	530	1121	-
HCM Lane V/C Ratio	-	-	0.107	0.015	-
HCM Control Delay (s)	-	-	12.6	8.3	0
HCM Lane LOS	-	-	B	A	A
HCM 95th %tile Q(veh)	-	-	0.4	0	-

Intersection	
Int Delay, s/veh	1.1

Movement	EBL	EBR	NBL	NBT	SBT	SBR
Vol, veh/h	27	15	36	386	313	40
Conflicting Peds, #/hr	0	0	0	0	0	0
Sign Control	Stop	Stop	Free	Free	Free	Free
RT Channelized	-	None	-	None	-	None
Storage Length	0	-	-	-	-	-
Veh in Median Storage, #	0	-	-	0	0	-
Grade, %	0	-	-	0	0	-
Peak Hour Factor	95	95	95	95	95	95
Heavy Vehicles, %	0	0	2	2	2	2
Mvmt Flow	28	16	38	406	329	42

Major/Minor	Minor2		Major1		Major2	
Conflicting Flow All	833	351	372	0	-	0
Stage 1	351	-	-	-	-	-
Stage 2	482	-	-	-	-	-
Critical Hdwy	6.4	6.2	4.12	-	-	-
Critical Hdwy Stg 1	5.4	-	-	-	-	-
Critical Hdwy Stg 2	5.4	-	-	-	-	-
Follow-up Hdwy	3.5	3.3	2.218	-	-	-
Pot Cap-1 Maneuver	341	697	1186	-	-	-
Stage 1	717	-	-	-	-	-
Stage 2	625	-	-	-	-	-
Platoon blocked, %				-	-	-
Mov Cap-1 Maneuver	327	697	1186	-	-	-
Mov Cap-2 Maneuver	327	-	-	-	-	-
Stage 1	717	-	-	-	-	-
Stage 2	599	-	-	-	-	-

Approach	EB	NB	SB
HCM Control Delay, s	15	0.7	0
HCM LOS	C		

Minor Lane/Major Mvmt	NBL	NBT	EBLn1	SBT	SBR
Capacity (veh/h)	1186	-	403	-	-
HCM Lane V/C Ratio	0.032	-	0.11	-	-
HCM Control Delay (s)	8.1	0	15	-	-
HCM Lane LOS	A	A	C	-	-
HCM 95th %tile Q(veh)	0.1	-	0.4	-	-

Intersection	
Int Delay, s/veh	0.6

Movement	EBL	EBR	NBL	NBT	SBT	SBR
Vol, veh/h	19	6	14	399	347	31
Conflicting Peds, #/hr	0	0	0	0	0	0
Sign Control	Stop	Stop	Free	Free	Free	Free
RT Channelized	-	None	-	None	-	None
Storage Length	0	-	-	-	-	-
Veh in Median Storage, #	0	-	-	0	0	-
Grade, %	0	-	-	0	0	-
Peak Hour Factor	95	95	95	95	95	95
Heavy Vehicles, %	0	0	2	2	2	2
Mvmt Flow	20	6	15	420	365	33

Major/Minor	Minor2		Major1		Major2	
Conflicting Flow All	831	382	398	0	-	0
Stage 1	382	-	-	-	-	-
Stage 2	449	-	-	-	-	-
Critical Hdwy	6.4	6.2	4.12	-	-	-
Critical Hdwy Stg 1	5.4	-	-	-	-	-
Critical Hdwy Stg 2	5.4	-	-	-	-	-
Follow-up Hdwy	3.5	3.3	2.218	-	-	-
Pot Cap-1 Maneuver	342	670	1161	-	-	-
Stage 1	694	-	-	-	-	-
Stage 2	647	-	-	-	-	-
Platoon blocked, %				-	-	-
Mov Cap-1 Maneuver	336	670	1161	-	-	-
Mov Cap-2 Maneuver	336	-	-	-	-	-
Stage 1	694	-	-	-	-	-
Stage 2	636	-	-	-	-	-

Approach	EB	NB	SB
HCM Control Delay, s	15.1	0.3	0
HCM LOS	C		

Minor Lane/Major Mvmt	NBL	NBT	EBLn1	SBT	SBR
Capacity (veh/h)	1161	-	382	-	-
HCM Lane V/C Ratio	0.013	-	0.069	-	-
HCM Control Delay (s)	8.1	0	15.1	-	-
HCM Lane LOS	A	A	C	-	-
HCM 95th %tile Q(veh)	0	-	0.2	-	-

Intersection	
Int Delay, s/veh	1.4

Movement	WBL	WBR	NBT	NBR	SBL	SBT
Vol, veh/h	8	43	412	6	68	370
Conflicting Peds, #/hr	0	0	0	0	0	0
Sign Control	Stop	Stop	Free	Free	Free	Free
RT Channelized	-	None	-	None	-	None
Storage Length	0	-	-	-	-	-
Veh in Median Storage, #	0	-	0	-	-	0
Grade, %	0	-	0	-	-	0
Peak Hour Factor	95	95	95	95	95	95
Heavy Vehicles, %	0	0	2	2	2	2
Mvmt Flow	8	45	434	6	72	389

Major/Minor	Minor1		Major1		Major2	
Conflicting Flow All	970	437	0	0	440	0
Stage 1	437	-	-	-	-	-
Stage 2	533	-	-	-	-	-
Critical Hdwy	6.4	6.2	-	-	4.12	-
Critical Hdwy Stg 1	5.4	-	-	-	-	-
Critical Hdwy Stg 2	5.4	-	-	-	-	-
Follow-up Hdwy	3.5	3.3	-	-	2.218	-
Pot Cap-1 Maneuver	283	624	-	-	1120	-
Stage 1	655	-	-	-	-	-
Stage 2	593	-	-	-	-	-
Platoon blocked, %			-	-		-
Mov Cap-1 Maneuver	260	624	-	-	1120	-
Mov Cap-2 Maneuver	260	-	-	-	-	-
Stage 1	655	-	-	-	-	-
Stage 2	544	-	-	-	-	-

Approach	WB	NB	SB
HCM Control Delay, s	12.9	0	1.3
HCM LOS	B		

Minor Lane/Major Mvmt	NBT	NBR	WBLn1	SBL	SBT
Capacity (veh/h)	-	-	512	1120	-
HCM Lane V/C Ratio	-	-	0.105	0.064	-
HCM Control Delay (s)	-	-	12.9	8.4	0
HCM Lane LOS	-	-	B	A	A
HCM 95th %tile Q(veh)	-	-	0.3	0.2	-

Intersection	
Int Delay, s/veh	0.6

Movement	EBL	EBR	NBL	NBT	SBT	SBR
Vol, veh/h	18	16	6	449	422	28
Conflicting Peds, #/hr	0	0	0	0	0	0
Sign Control	Stop	Stop	Free	Free	Free	Free
RT Channelized	-	None	-	None	-	None
Storage Length	0	-	-	-	-	-
Veh in Median Storage, #	0	-	-	0	0	-
Grade, %	0	-	-	0	0	-
Peak Hour Factor	95	95	95	95	95	95
Heavy Vehicles, %	0	0	2	2	2	2
Mvmt Flow	19	17	6	473	444	29

Major/Minor	Minor2		Major1		Major2	
Conflicting Flow All	944	459	474	0	-	0
Stage 1	459	-	-	-	-	-
Stage 2	485	-	-	-	-	-
Critical Hdwy	6.4	6.2	4.12	-	-	-
Critical Hdwy Stg 1	5.4	-	-	-	-	-
Critical Hdwy Stg 2	5.4	-	-	-	-	-
Follow-up Hdwy	3.5	3.3	2.218	-	-	-
Pot Cap-1 Maneuver	293	606	1088	-	-	-
Stage 1	641	-	-	-	-	-
Stage 2	623	-	-	-	-	-
Platoon blocked, %				-	-	-
Mov Cap-1 Maneuver	291	606	1088	-	-	-
Mov Cap-2 Maneuver	291	-	-	-	-	-
Stage 1	641	-	-	-	-	-
Stage 2	619	-	-	-	-	-

Approach	EB	NB	SB
HCM Control Delay, s	15.3	0.1	0
HCM LOS	C		

Minor Lane/Major Mvmt	NBL	NBT	EBLn1	SBT	SBR
Capacity (veh/h)	1088	-	385	-	-
HCM Lane V/C Ratio	0.006	-	0.093	-	-
HCM Control Delay (s)	8.3	0	15.3	-	-
HCM Lane LOS	A	A	C	-	-
HCM 95th %tile Q(veh)	0	-	0.3	-	-

Intersection	
Int Delay, s/veh	0.4

Movement	EBL	EBR	NBL	NBT	SBT	SBR
Vol, veh/h	12	8	6	461	442	17
Conflicting Peds, #/hr	0	0	0	0	0	0
Sign Control	Stop	Stop	Free	Free	Free	Free
RT Channelized	-	None	-	None	-	None
Storage Length	0	-	-	-	-	-
Veh in Median Storage, #	0	-	-	0	0	-
Grade, %	0	-	-	0	0	-
Peak Hour Factor	95	95	95	95	95	95
Heavy Vehicles, %	0	0	2	2	2	2
Mvmt Flow	13	8	6	485	465	18

Major/Minor	Minor2		Major1		Major2	
Conflicting Flow All	972	474	483	0	-	0
Stage 1	474	-	-	-	-	-
Stage 2	498	-	-	-	-	-
Critical Hdwy	6.4	6.2	4.12	-	-	-
Critical Hdwy Stg 1	5.4	-	-	-	-	-
Critical Hdwy Stg 2	5.4	-	-	-	-	-
Follow-up Hdwy	3.5	3.3	2.218	-	-	-
Pot Cap-1 Maneuver	282	595	1080	-	-	-
Stage 1	630	-	-	-	-	-
Stage 2	615	-	-	-	-	-
Platoon blocked, %				-	-	-
Mov Cap-1 Maneuver	280	595	1080	-	-	-
Mov Cap-2 Maneuver	280	-	-	-	-	-
Stage 1	630	-	-	-	-	-
Stage 2	610	-	-	-	-	-

Approach	EB	NB	SB
HCM Control Delay, s	15.8	0.1	0
HCM LOS	C		

Minor Lane/Major Mvmt	NBL	NBT	EBLn1	SBT	SBR
Capacity (veh/h)	1080	-	355	-	-
HCM Lane V/C Ratio	0.006	-	0.059	-	-
HCM Control Delay (s)	8.4	0	15.8	-	-
HCM Lane LOS	A	A	C	-	-
HCM 95th %tile Q(veh)	0	-	0.2	-	-

Intersection	
Int Delay, s/veh	0.4

Movement	EBL	EBR	NBL	NBT	SBT	SBR
Vol, veh/h	15	3	11	462	456	22
Conflicting Peds, #/hr	0	0	0	0	0	0
Sign Control	Stop	Stop	Free	Free	Free	Free
RT Channelized	-	None	-	None	-	None
Storage Length	0	-	-	-	-	-
Veh in Median Storage, #	0	-	-	0	0	-
Grade, %	0	-	-	0	0	-
Peak Hour Factor	95	95	95	95	95	95
Heavy Vehicles, %	0	0	2	2	2	2
Mvmt Flow	16	3	12	486	480	23

Major/Minor	Minor2		Major1		Major2	
Conflicting Flow All	1001	492	503	0	-	0
Stage 1	492	-	-	-	-	-
Stage 2	509	-	-	-	-	-
Critical Hdwy	6.4	6.2	4.12	-	-	-
Critical Hdwy Stg 1	5.4	-	-	-	-	-
Critical Hdwy Stg 2	5.4	-	-	-	-	-
Follow-up Hdwy	3.5	3.3	2.218	-	-	-
Pot Cap-1 Maneuver	271	581	1061	-	-	-
Stage 1	619	-	-	-	-	-
Stage 2	608	-	-	-	-	-
Platoon blocked, %				-	-	-
Mov Cap-1 Maneuver	267	581	1061	-	-	-
Mov Cap-2 Maneuver	267	-	-	-	-	-
Stage 1	619	-	-	-	-	-
Stage 2	599	-	-	-	-	-

Approach	EB	NB	SB
HCM Control Delay, s	18.1	0.2	0
HCM LOS	C		

Minor Lane/Major Mvmt	NBL	NBT	EBLn1	SBT	SBR
Capacity (veh/h)	1061	-	293	-	-
HCM Lane V/C Ratio	0.011	-	0.065	-	-
HCM Control Delay (s)	8.4	0	18.1	-	-
HCM Lane LOS	A	A	C	-	-
HCM 95th %tile Q(veh)	0	-	0.2	-	-

Intersection	
Int Delay, s/veh	0.6

Movement	EBL	EBR	NBL	NBT	SBT	SBR
Vol, veh/h	13	15	20	457	463	29
Conflicting Peds, #/hr	0	0	0	0	0	0
Sign Control	Stop	Stop	Free	Free	Free	Free
RT Channelized	-	None	-	None	-	None
Storage Length	0	-	-	-	-	-
Veh in Median Storage, #	0	-	-	0	0	-
Grade, %	0	-	-	0	0	-
Peak Hour Factor	95	95	95	95	95	95
Heavy Vehicles, %	0	0	2	2	2	2
Mvmt Flow	14	16	21	481	487	31

Major/Minor	Minor2		Major1		Major2	
Conflicting Flow All	1026	503	518	0	-	0
Stage 1	503	-	-	-	-	-
Stage 2	523	-	-	-	-	-
Critical Hdwy	6.4	6.2	4.12	-	-	-
Critical Hdwy Stg 1	5.4	-	-	-	-	-
Critical Hdwy Stg 2	5.4	-	-	-	-	-
Follow-up Hdwy	3.5	3.3	2.218	-	-	-
Pot Cap-1 Maneuver	262	573	1048	-	-	-
Stage 1	612	-	-	-	-	-
Stage 2	599	-	-	-	-	-
Platoon blocked, %				-	-	-
Mov Cap-1 Maneuver	255	573	1048	-	-	-
Mov Cap-2 Maneuver	255	-	-	-	-	-
Stage 1	612	-	-	-	-	-
Stage 2	583	-	-	-	-	-

Approach	EB	NB	SB
HCM Control Delay, s	15.8	0.4	0
HCM LOS	C		

Minor Lane/Major Mvmt	NBL	NBT	EBLn1	SBT	SBR
Capacity (veh/h)	1048	-	363	-	-
HCM Lane V/C Ratio	0.02	-	0.081	-	-
HCM Control Delay (s)	8.5	0	15.8	-	-
HCM Lane LOS	A	A	C	-	-
HCM 95th %tile Q(veh)	0.1	-	0.3	-	-

Intersection	
Int Delay, s/veh	1.3

Movement	EBL	EBR	NBL	NBT	SBT	SBR
Vol, veh/h	54	2	8	462	490	78
Conflicting Peds, #/hr	0	0	0	0	0	0
Sign Control	Stop	Stop	Free	Free	Free	Free
RT Channelized	-	None	-	None	-	None
Storage Length	0	-	-	-	-	-
Veh in Median Storage, #	0	-	-	0	0	-
Grade, %	0	-	-	0	0	-
Peak Hour Factor	95	95	95	95	95	95
Heavy Vehicles, %	0	0	2	2	2	2
Mvmt Flow	57	2	8	486	516	82

Major/Minor	Minor2		Major1		Major2	
Conflicting Flow All	1060	557	598	0	-	0
Stage 1	557	-	-	-	-	-
Stage 2	503	-	-	-	-	-
Critical Hdwy	6.4	6.2	4.12	-	-	-
Critical Hdwy Stg 1	5.4	-	-	-	-	-
Critical Hdwy Stg 2	5.4	-	-	-	-	-
Follow-up Hdwy	3.5	3.3	2.218	-	-	-
Pot Cap-1 Maneuver	250	534	979	-	-	-
Stage 1	578	-	-	-	-	-
Stage 2	612	-	-	-	-	-
Platoon blocked, %				-	-	-
Mov Cap-1 Maneuver	247	534	979	-	-	-
Mov Cap-2 Maneuver	247	-	-	-	-	-
Stage 1	578	-	-	-	-	-
Stage 2	605	-	-	-	-	-

Approach	EB	NB	SB
HCM Control Delay, s	23.6	0.1	0
HCM LOS	C		

Minor Lane/Major Mvmt	NBL	NBT	EBLn1	SBT	SBR
Capacity (veh/h)	979	-	252	-	-
HCM Lane V/C Ratio	0.009	-	0.234	-	-
HCM Control Delay (s)	8.7	0	23.6	-	-
HCM Lane LOS	A	A	C	-	-
HCM 95th %tile Q(veh)	0	-	0.9	-	-

Lane Group	EBL	EBT	EBR	WBL	WBT	WBR	NBL	NBT	NBR	SBL	SBT	SBR
Lane Configurations												
Volume (vph)	405	560	93	200	599	595	47	372	97	421	275	280
Ideal Flow (vphpl)	1900	1900	1900	1900	1900	1900	1900	1900	1900	1900	1900	1900
Lane Width (ft)	12	12	12	12	12	12	12	12	12	12	12	12
Grade (%)		0%			0%			0%			0%	
Storage Length (ft)	450		475	485		485	0		280	525		0
Storage Lanes	1		1	1		1	1		1	2		1
Taper Length (ft)	50			50			200			25		
Satd. Flow (prot)	1787	3539	1615	1787	3471	1599	1770	1805	0	3433	1863	1583
Flt Permitted	0.950			0.950			0.950			0.950		
Satd. Flow (perm)	1787	3539	1615	1787	3471	1599	1770	1805	0	3433	1863	1583
Right Turn on Red			Yes			Yes			Yes			Yes
Satd. Flow (RTOR)			188			140		6				295
Link Speed (mph)		55			55			50			45	
Link Distance (ft)		2394			2403			1138			1482	
Travel Time (s)		29.7			29.8			15.5			22.5	
Confl. Peds. (#/hr)												
Confl. Bikes (#/hr)												
Peak Hour Factor	0.95	0.95	0.95	0.95	0.95	0.95	0.95	0.95	0.95	0.95	0.95	0.95
Growth Factor	100%	100%	100%	100%	100%	100%	100%	100%	100%	100%	100%	100%
Heavy Vehicles (%)	1%	2%	0%	1%	4%	1%	2%	2%	2%	2%	2%	2%
Bus Blockages (#/hr)	0	0	0	0	0	0	0	0	0	0	0	0
Parking (#/hr)												
Mid-Block Traffic (%)		0%			0%			0%			0%	
Shared Lane Traffic (%)												
Lane Group Flow (vph)	426	589	98	211	631	626	49	494	0	443	289	295
Turn Type	Prot	NA	Prot	Prot	NA	pm+ov	Prot	NA		Prot	NA	Perm
Protected Phases	1	6	6	5	2	3	7	4		3	8	
Permitted Phases						2						8
Detector Phase	1	6	6	5	2	3	7	4		3	8	8
Switch Phase												
Minimum Initial (s)	5.0	17.0	17.0	5.0	17.0	10.0	10.0	6.0		10.0	6.0	6.0
Minimum Split (s)	13.8	25.8	25.8	13.8	44.8	18.2	18.5	14.5		18.2	51.2	51.2
Total Split (s)	41.0	57.0	57.0	31.0	47.0	56.0	31.0	36.0		56.0	61.0	61.0
Total Split (%)	22.8%	31.7%	31.7%	17.2%	26.1%	31.1%	17.2%	20.0%		31.1%	33.9%	33.9%
Yellow Time (s)	6.0	6.0	6.0	6.0	6.0	4.8	5.1	5.1		4.8	4.8	4.8
All-Red Time (s)	2.8	2.8	2.8	2.8	2.8	3.4	3.4	3.4		3.4	3.4	3.4
Lost Time Adjust (s)	0.0	0.0	0.0	0.0	0.0	0.0	0.0	0.0		0.0	0.0	0.0
Total Lost Time (s)	8.8	8.8	8.8	8.8	8.8	8.2	8.5	8.5		8.2	8.2	8.2
Lead/Lag	Lead	Lag	Lag	Lead	Lag	Lead	Lead	Lag		Lead	Lag	Lag
Lead-Lag Optimize?	Yes	Yes	Yes	Yes	Yes	Yes	Yes	Yes		Yes	Yes	Yes
Recall Mode	None	Min	Min	None	Min	Min	None	None		Min	None	None
Act Effct Green (s)	32.4	43.5	43.5	21.9	33.0	70.0	11.0	27.7		28.1	48.9	48.9
Actuated g/C Ratio	0.21	0.28	0.28	0.14	0.21	0.45	0.07	0.18		0.18	0.31	0.31
v/c Ratio	1.15	0.60	0.17	0.84	0.86	0.79	0.39	1.52		0.72	0.49	0.42
Control Delay	146.2	52.0	0.6	93.6	72.1	35.1	81.9	288.9		67.0	48.9	6.1
Queue Delay	0.0	0.0	0.0	0.0	0.0	0.0	0.0	0.0		0.0	0.0	0.0
Total Delay	146.2	52.0	0.6	93.6	72.1	35.1	81.9	288.9		67.0	48.9	6.1
LOS	F	D	A	F	E	D	F	F		E	D	A

Lane Group	EBL	EBT	EBR	WBL	WBT	WBR	NBL	NBT	NBR	SBL	SBT	SBR
Approach Delay		83.5			59.4			270.2			44.4	
Approach LOS		F			E			F			D	

Intersection Summary	
Area Type:	Other
Cycle Length: 180	
Actuated Cycle Length: 155.7	
Natural Cycle: 150	
Control Type: Actuated-Uncoordinated	
Maximum v/c Ratio: 1.52	
Intersection Signal Delay: 89.8	Intersection LOS: F
Intersection Capacity Utilization 106.0%	ICU Level of Service G
Analysis Period (min) 15	

Splits and Phases: 15: Belle Terre Blvd/Belle Terre Pkwy & SR 100

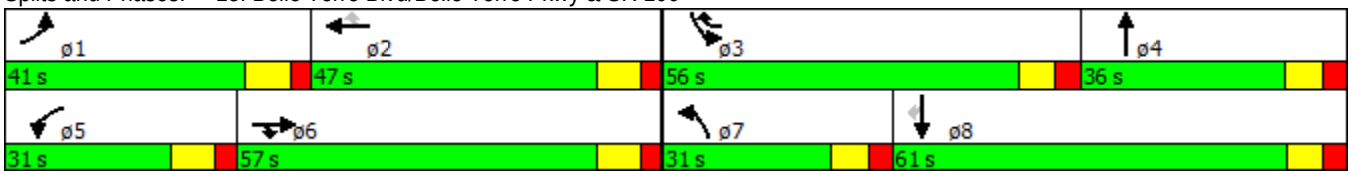

Intersection	
Int Delay, s/veh	0.5

Movement	EBL	EBR	NBL	NBT	SBT	SBR
Vol, veh/h	10	38	41	1487	1161	23
Conflicting Peds, #/hr	0	0	0	0	0	0
Sign Control	Stop	Stop	Free	Free	Free	Free
RT Channelized	-	None	-	None	-	None
Storage Length	0	-	380	-	-	-
Veh in Median Storage, #	1	-	-	0	0	-
Grade, %	0	-	-	0	0	-
Peak Hour Factor	95	95	95	95	95	95
Heavy Vehicles, %	0	11	2	2	2	2
Mvmt Flow	11	40	43	1565	1222	24

Major/Minor	Minor2		Major1		Major2	
Conflicting Flow All	2103	623	1246	0	-	0
Stage 1	1234	-	-	-	-	-
Stage 2	869	-	-	-	-	-
Critical Hdwy	6.8	7.12	4.14	-	-	-
Critical Hdwy Stg 1	5.8	-	-	-	-	-
Critical Hdwy Stg 2	5.8	-	-	-	-	-
Follow-up Hdwy	3.5	3.41	2.22	-	-	-
Pot Cap-1 Maneuver	45	408	554	-	-	-
Stage 1	242	-	-	-	-	-
Stage 2	376	-	-	-	-	-
Platoon blocked, %				-	-	-
Mov Cap-1 Maneuver	42	408	554	-	-	-
Mov Cap-2 Maneuver	149	-	-	-	-	-
Stage 1	242	-	-	-	-	-
Stage 2	347	-	-	-	-	-

Approach	EB	NB	SB
HCM Control Delay, s	19.4	0.3	0
HCM LOS	C		

Minor Lane/Major Mvmt	NBL	NBT	EBLn1	SBT	SBR
Capacity (veh/h)	554	-	300	-	-
HCM Lane V/C Ratio	0.078	-	0.168	-	-
HCM Control Delay (s)	12	-	19.4	-	-
HCM Lane LOS	B	-	C	-	-
HCM 95th %tile Q(veh)	0.3	-	0.6	-	-

Intersection	
Int Delay, s/veh	4.6

Movement	EBL	EBT	EBR	WBL	WBT	WBR	NBL	NBT	NBR	SBL	SBT	SBR
Vol, veh/h	23	4	4	81	3	31	5	1417	75	14	1099	30
Conflicting Peds, #/hr	0	0	0	0	0	0	0	0	0	0	0	0
Sign Control	Stop	Stop	Stop	Stop	Stop	Stop	Free	Free	Free	Free	Free	Free
RT Channelized	-	-	None	-	-	None	-	-	None	-	-	None
Storage Length	-	-	-	300	-	-	350	-	250	400	-	-
Veh in Median Storage, #	-	1	-	-	1	-	-	0	-	-	0	-
Grade, %	-	0	-	-	0	-	-	0	-	-	0	-
Peak Hour Factor	95	95	95	95	95	95	95	95	95	95	95	95
Heavy Vehicles, %	0	0	0	0	0	0	2	2	2	2	2	2
Mvmt Flow	24	4	4	85	3	33	5	1492	79	15	1157	32

Major/Minor	Minor2			Minor1			Major1			Major2		
Conflicting Flow All	1960	2704	594	2112	2720	746	1188	0	0	1492	0	0
Stage 1	1202	1202	-	1502	1502	-	-	-	-	-	-	-
Stage 2	758	1502	-	610	1218	-	-	-	-	-	-	-
Critical Hdwy	7.5	6.5	6.9	7.5	6.5	6.9	4.14	-	-	4.14	-	-
Critical Hdwy Stg 1	6.5	5.5	-	6.5	5.5	-	-	-	-	-	-	-
Critical Hdwy Stg 2	6.5	5.5	-	6.5	5.5	-	-	-	-	-	-	-
Follow-up Hdwy	3.5	4	3.3	3.5	4	3.3	2.22	-	-	2.22	-	-
Pot Cap-1 Maneuver	39	22	453	~ 30	21	360	583	-	-	446	-	-
Stage 1	199	260	-	130	187	-	-	-	-	-	-	-
Stage 2	370	187	-	453	255	-	-	-	-	-	-	-
Platoon blocked, %								-	-		-	-
Mov Cap-1 Maneuver	34	21	453	~ 28	20	360	583	-	-	446	-	-
Mov Cap-2 Maneuver	125	102	-	99	104	-	-	-	-	-	-	-
Stage 1	197	251	-	129	185	-	-	-	-	-	-	-
Stage 2	328	185	-	426	246	-	-	-	-	-	-	-

Approach	EB	WB	NB	SB
HCM Control Delay, s	40.3	99.2	0	0.2
HCM LOS	E	F		

Minor Lane/Major Mvmt	NBL	NBT	NBR	EBLn1	WBLn1	WBLn2	SBL	SBT	SBR
Capacity (veh/h)	583	-	-	134	99	296	446	-	-
HCM Lane V/C Ratio	0.009	-	-	0.244	0.861	0.121	0.033	-	-
HCM Control Delay (s)	11.2	-	-	40.3	132.9	18.8	13.3	-	-
HCM Lane LOS	B	-	-	E	F	C	B	-	-
HCM 95th %tile Q(veh)	0	-	-	0.9	4.9	0.4	0.1	-	-

Notes

~: Volume exceeds capacity $: Delay exceeds 300s +: Computation Not Defined *: All major volume in platoon

Lane Group	EBL	EBT	EBR	WBL	WBT	WBR	NBL	NBT	NBR	SBL	SBT	SBR
Lane Configurations												
Volume (vph)	146	49	194	51	89	298	248	1207	16	248	898	212
Ideal Flow (vphpl)	1900	1900	1900	1900	1900	1900	1900	1900	1900	1900	1900	1900
Lane Width (ft)	12	12	12	12	12	12	12	12	12	12	12	12
Grade (%)		0%			0%			0%			0%	
Storage Length (ft)	0		100	285		0	325		450	450		275
Storage Lanes	1		1	1		1	1		1	1		1
Taper Length (ft)	50			75			50			50		
Satd. Flow (prot)	1770	1672	0	1752	1900	1615	1770	3539	1583	1770	3539	1583
Flt Permitted	0.696			0.320			0.950			0.950		
Satd. Flow (perm)	1296	1672	0	590	1900	1615	1770	3539	1583	1770	3539	1583
Right Turn on Red			Yes			Yes			Yes			Yes
Satd. Flow (RTOR)		150				314			264			223
Link Speed (mph)		40			40			45			45	
Link Distance (ft)		664			1054			1578			2742	
Travel Time (s)		11.3			18.0			23.9			41.5	
Confl. Peds. (#/hr)												
Confl. Bikes (#/hr)												
Peak Hour Factor	0.95	0.95	0.95	0.95	0.95	0.95	0.95	0.95	0.95	0.95	0.95	0.95
Growth Factor	100%	100%	100%	100%	100%	100%	100%	100%	100%	100%	100%	100%
Heavy Vehicles (%)	2%	0%	0%	3%	0%	0%	2%	2%	2%	2%	2%	2%
Bus Blockages (#/hr)	0	0	0	0	0	0	0	0	0	0	0	0
Parking (#/hr)												
Mid-Block Traffic (%)		0%			0%			0%			0%	
Shared Lane Traffic (%)												
Lane Group Flow (vph)	154	256	0	54	94	314	261	1271	17	261	945	223
Turn Type	pm+pt	NA		pm+pt	NA	Perm	Prot	NA	Perm	Prot	NA	Perm
Protected Phases	3	8		7	4		1	6		5	2	
Permitted Phases	8			4		4			6			2
Detector Phase	3	8		7	4	4	1	6	6	5	2	2
Switch Phase												
Minimum Initial (s)	5.0	5.0		5.0	5.0	5.0	5.0	15.0	15.0	5.0	15.0	15.0
Minimum Split (s)	11.4	11.4		21.6	41.6	41.6	11.8	21.8	21.8	11.8	29.8	29.8
Total Split (s)	12.0	32.0		21.6	41.6	41.6	15.0	38.4	38.4	28.0	51.4	51.4
Total Split (%)	10.0%	26.7%		18.0%	34.7%	34.7%	12.5%	32.0%	32.0%	23.3%	42.8%	42.8%
Yellow Time (s)	4.4	4.4		3.6	3.6	3.6	4.8	4.8	4.8	4.8	4.8	4.8
All-Red Time (s)	2.0	2.0		2.0	2.0	2.0	2.0	2.0	2.0	2.0	2.0	2.0
Lost Time Adjust (s)	0.0	0.0		0.0	0.0	0.0	0.0	0.0	0.0	0.0	0.0	0.0
Total Lost Time (s)	6.4	6.4		5.6	5.6	5.6	6.8	6.8	6.8	6.8	6.8	6.8
Lead/Lag	Lead	Lag		Lead	Lag	Lag	Lead	Lag	Lag	Lead	Lag	Lag
Lead-Lag Optimize?	Yes	Yes		Yes	Yes	Yes	Yes	Yes	Yes	Yes	Yes	Yes
Recall Mode	None	None		None	None	None	None	Min	Min	None	Min	Min
Act Effct Green (s)	19.4	15.0		22.6	14.7	14.7	8.3	31.9	31.9	18.7	42.3	42.3
Actuated g/C Ratio	0.20	0.15		0.23	0.15	0.15	0.09	0.33	0.33	0.19	0.44	0.44
v/c Ratio	0.54	0.66		0.23	0.33	0.61	1.73	1.09	0.02	0.77	0.61	0.27
Control Delay	38.6	26.3		28.3	39.2	9.7	382.7	87.4	0.1	53.8	23.8	3.7
Queue Delay	0.0	0.0		0.0	0.0	0.0	0.0	0.0	0.0	0.0	0.0	0.0
Total Delay	38.6	26.3		28.3	39.2	9.7	382.7	87.4	0.1	53.8	23.8	3.7
LOS	D	C		C	D	A	F	F	A	D	C	A

Lane Group	EBL	EBT	EBR	WBL	WBT	WBR	NBL	NBT	NBR	SBL	SBT	SBR
Approach Delay		30.9			17.9			136.2			26.1	
Approach LOS		C			B			F			C	

Intersection Summary	
Area Type:	Other
Cycle Length: 120	
Actuated Cycle Length: 96.8	
Natural Cycle: 135	
Control Type: Actuated-Uncoordinated	
Maximum v/c Ratio: 1.73	
Intersection Signal Delay: 69.9	Intersection LOS: E
Intersection Capacity Utilization 87.1%	ICU Level of Service E
Analysis Period (min) 15	

Splits and Phases: 18: Belle Terre Pkwy & Easthampton Blvd /Central Ave

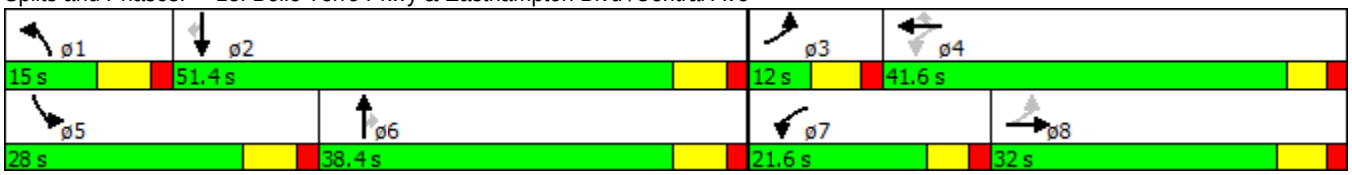

Lane Group	EBL	EBT	EBR	WBL	WBT	WBR	NBL	NBT	NBR	SBL	SBT	SBR
Lane Configurations												
Volume (vph)	59	101	198	200	236	342	185	1330	136	216	960	48
Ideal Flow (vphpl)	1900	1900	1900	1900	1900	1900	1900	1900	1900	1900	1900	1900
Lane Width (ft)	12	12	12	12	12	12	12	12	12	12	12	12
Grade (%)		0%			0%			0%			0%	
Storage Length (ft)	300		0	250		0	350		0	350		0
Storage Lanes	1		0	1		0	1		0	1		0
Taper Length (ft)	50			50			50			50		
Satd. Flow (prot)	1805	1695	0	1805	1721	0	1770	3490	0	1770	3514	0
Flt Permitted	0.117			0.419			0.950			0.950		
Satd. Flow (perm)	222	1695	0	796	1721	0	1770	3490	0	1770	3514	0
Right Turn on Red			Yes			Yes			Yes			Yes
Satd. Flow (RTOR)		82			61			9			5	
Link Speed (mph)		55			55			45			45	
Link Distance (ft)		1429			1119			2742			1415	
Travel Time (s)		17.7			13.9			41.5			21.4	
Confl. Peds. (#/hr)												
Confl. Bikes (#/hr)												
Peak Hour Factor	0.95	0.95	0.95	0.95	0.95	0.95	0.95	0.95	0.95	0.95	0.95	0.95
Growth Factor	100%	100%	100%	100%	100%	100%	100%	100%	100%	100%	100%	100%
Heavy Vehicles (%)	0%	1%	1%	0%	0%	1%	2%	2%	2%	2%	2%	2%
Bus Blockages (#/hr)	0	0	0	0	0	0	0	0	0	0	0	0
Parking (#/hr)												
Mid-Block Traffic (%)		0%			0%			0%			0%	
Shared Lane Traffic (%)												
Lane Group Flow (vph)	62	314	0	211	608	0	195	1543	0	227	1062	0
Turn Type	Perm	NA		Perm	NA		Prot	NA		Prot	NA	
Protected Phases		4			8		5	2		1	6	
Permitted Phases	4			8								
Detector Phase	4	4		8	8		5	2		1	6	
Switch Phase												
Minimum Initial (s)	7.0	7.0		7.0	7.0		7.0	15.0		7.0	15.0	
Minimum Split (s)	41.0	41.0		39.0	39.0		13.8	33.8		13.8	33.8	
Total Split (s)	41.0	41.0		41.0	41.0		23.4	37.0		42.0	55.6	
Total Split (%)	34.2%	34.2%		34.2%	34.2%		19.5%	30.8%		35.0%	46.3%	
Yellow Time (s)	5.0	5.0		5.0	5.0		4.8	4.8		4.8	4.8	
All-Red Time (s)	2.0	2.0		2.0	2.0		2.0	2.0		2.0	2.0	
Lost Time Adjust (s)	0.0	0.0		0.0	0.0		0.0	0.0		0.0	0.0	
Total Lost Time (s)	7.0	7.0		7.0	7.0		6.8	6.8		6.8	6.8	
Lead/Lag							Lead	Lag		Lead	Lag	
Lead-Lag Optimize?							Yes	Yes		Yes	Yes	
Recall Mode	None	None		None	None		None	Min		None	Min	
Act Effct Green (s)	34.2	34.2		34.2	34.2		15.3	35.8		19.5	40.0	
Actuated g/C Ratio	0.31	0.31		0.31	0.31		0.14	0.32		0.18	0.36	
v/c Ratio	0.91	0.54		0.86	1.06		0.80	1.35		0.73	0.83	
Control Delay	128.6	28.3		69.1	88.0		70.7	196.5		57.0	38.3	
Queue Delay	0.0	0.0		0.0	0.0		0.0	0.0		0.0	0.0	
Total Delay	128.6	28.3		69.1	88.0		70.7	196.5		57.0	38.3	
LOS	F	C		E	F		E	F		E	D	

Lane Group	EBL	EBT	EBR	WBL	WBT	WBR	NBL	NBT	NBR	SBL	SBT	SBR
Approach Delay		44.8			83.1			182.4			41.5	
Approach LOS		D			F			F			D	

Intersection Summary	
Area Type:	Other
Cycle Length: 120	
Actuated Cycle Length: 110.2	
Natural Cycle: 130	
Control Type: Actuated-Uncoordinated	
Maximum v/c Ratio: 1.35	
Intersection Signal Delay: 107.9	Intersection LOS: F
Intersection Capacity Utilization 115.3%	ICU Level of Service H
Analysis Period (min) 15	

Splits and Phases: 19: Belle Terre Pkwy & Royal Palms Pkwy

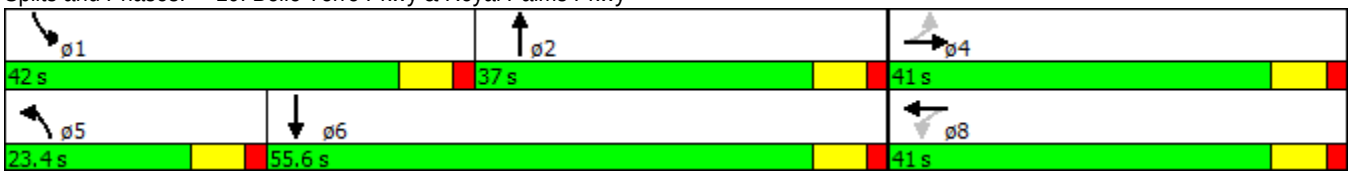

Intersection	
Int Delay, s/veh	2.4

Movement	WBL	WBR	NBT	NBR	SBL	SBT
Vol, veh/h	45	42	1660	71	48	1179
Conflicting Peds, #/hr	0	0	0	0	0	0
Sign Control	Stop	Stop	Free	Free	Free	Free
RT Channelized	-	None	-	None	-	None
Storage Length	0	-	-	-	350	-
Veh in Median Storage, #	1	-	0	-	-	0
Grade, %	0	-	0	-	-	0
Peak Hour Factor	95	95	95	95	95	95
Heavy Vehicles, %	0	0	2	2	2	2
Mvmt Flow	47	44	1747	75	51	1241

Major/Minor	Minor1		Major1		Major2	
Conflicting Flow All	2507	911	0	0	1822	0
Stage 1	1785	-	-	-	-	-
Stage 2	722	-	-	-	-	-
Critical Hdwy	6.8	6.9	-	-	4.14	-
Critical Hdwy Stg 1	5.8	-	-	-	-	-
Critical Hdwy Stg 2	5.8	-	-	-	-	-
Follow-up Hdwy	3.5	3.3	-	-	2.22	-
Pot Cap-1 Maneuver	~ 24	281	-	-	332	-
Stage 1	122	-	-	-	-	-
Stage 2	447	-	-	-	-	-
Platoon blocked, %			-	-		-
Mov Cap-1 Maneuver	~ 20	281	-	-	332	-
Mov Cap-2 Maneuver	91	-	-	-	-	-
Stage 1	122	-	-	-	-	-
Stage 2	378	-	-	-	-	-

Approach	WB	NB	SB
HCM Control Delay, s	75	0	0.7
HCM LOS	F		

Minor Lane/Major Mvmt	NBT	NBR	WBLn1	SBL	SBT
Capacity (veh/h)	-	-	135	332	-
HCM Lane V/C Ratio	-	-	0.678	0.152	-
HCM Control Delay (s)	-	-	75	17.8	-
HCM Lane LOS	-	-	F	C	-
HCM 95th %tile Q(veh)	-	-	3.7	0.5	-

Notes

~: Volume exceeds capacity $: Delay exceeds 300s +: Computation Not Defined *: All major volume in platoon

Lane Group	EBL	EBR	NBL	NBT	SBT	SBR
Lane Configurations						
Volume (vph)	161	222	373	1329	1005	205
Ideal Flow (vphpl)	1900	1900	1900	1900	1900	1900
Lane Width (ft)	12	12	12	12	12	12
Grade (%)	0%			0%	0%	
Storage Length (ft)	250	0	350			200
Storage Lanes	1	1	1			1
Taper Length (ft)	50		50			
Satd. Flow (prot)	1805	1599	1770	3539	3539	1583
Flt Permitted	0.950		0.125			
Satd. Flow (perm)	1805	1599	233	3539	3539	1583
Right Turn on Red		Yes				Yes
Satd. Flow (RTOR)		234				188
Link Speed (mph)	45			45	45	
Link Distance (ft)	1554			1428	1580	
Travel Time (s)	23.5			21.6	23.9	
Confl. Peds. (#/hr)						
Confl. Bikes (#/hr)						
Peak Hour Factor	0.95	0.95	0.95	0.95	0.95	0.95
Growth Factor	100%	100%	100%	100%	100%	100%
Heavy Vehicles (%)	0%	1%	2%	2%	2%	2%
Bus Blockages (#/hr)	0	0	0	0	0	0
Parking (#/hr)						
Mid-Block Traffic (%)	0%			0%	0%	
Shared Lane Traffic (%)						
Lane Group Flow (vph)	169	234	393	1399	1058	216
Turn Type	Prot	Prot	pm+pt	NA	NA	Perm
Protected Phases	8	8	1	6	2	
Permitted Phases			6			2
Detector Phase	8	8	1	6	2	2
Switch Phase						
Minimum Initial (s)	6.0	6.0	6.0	15.0	15.0	15.0
Minimum Split (s)	33.8	33.8	13.0	22.0	30.0	30.0
Total Split (s)	35.0	35.0	25.0	85.0	60.0	60.0
Total Split (%)	29.2%	29.2%	20.8%	70.8%	50.0%	50.0%
Yellow Time (s)	4.8	4.8	4.8	4.8	4.8	4.8
All-Red Time (s)	2.0	2.0	2.2	2.2	2.2	2.2
Lost Time Adjust (s)	0.0	0.0	0.0	0.0	0.0	0.0
Total Lost Time (s)	6.8	6.8	7.0	7.0	7.0	7.0
Lead/Lag			Lead		Lag	Lag
Lead-Lag Optimize?			Yes		Yes	Yes
Recall Mode	None	None	None	Min	Min	Min
Act Effct Green (s)	14.2	14.2	62.8	62.8	37.2	37.2
Actuated g/C Ratio	0.16	0.16	0.69	0.69	0.41	0.41
v/c Ratio	0.60	0.52	0.83	0.57	0.73	0.29
Control Delay	47.1	9.8	37.0	8.7	26.0	4.8
Queue Delay	0.0	0.0	0.0	0.0	0.0	0.0
Total Delay	47.1	9.8	37.0	8.7	26.0	4.8
LOS	D	A	D	A	C	A

Lane Group	EBL	EBR	NBL	NBT	SBT	SBR
Approach Delay	25.5			14.9	22.4	
Approach LOS	C			B	C	

Intersection Summary	
Area Type:	Other
Cycle Length: 120	
Actuated Cycle Length: 91.2	
Natural Cycle: 90	
Control Type: Actuated-Uncoordinated	
Maximum v/c Ratio: 0.83	
Intersection Signal Delay: 18.9	Intersection LOS: B
Intersection Capacity Utilization 74.7%	ICU Level of Service D
Analysis Period (min) 15	

Splits and Phases: 21: Belle Terre Pkwy & Rymfire Dr

Intersection	
Int Delay, s/veh	2.5

Movement	WBL	WBR	NBT	NBR	SBL	SBT
Vol, veh/h	45	57	1427	63	91	1165
Conflicting Peds, #/hr	0	0	0	0	0	0
Sign Control	Stop	Stop	Free	Free	Free	Free
RT Channelized	-	None	-	None	-	None
Storage Length	0	-	-	-	350	-
Veh in Median Storage, #	1	-	0	-	-	0
Grade, %	0	-	0	-	-	0
Peak Hour Factor	95	95	95	95	95	95
Heavy Vehicles, %	3	2	2	2	2	2
Mvmt Flow	47	60	1502	66	96	1226

Major/Minor	Minor1		Major1		Major2	
Conflicting Flow All	2340	784	0	0	1568	0
Stage 1	1535	-	-	-	-	-
Stage 2	805	-	-	-	-	-
Critical Hdwy	6.86	6.94	-	-	4.14	-
Critical Hdwy Stg 1	5.86	-	-	-	-	-
Critical Hdwy Stg 2	5.86	-	-	-	-	-
Follow-up Hdwy	3.53	3.32	-	-	2.22	-
Pot Cap-1 Maneuver	~ 30	336	-	-	417	-
Stage 1	162	-	-	-	-	-
Stage 2	398	-	-	-	-	-
Platoon blocked, %			-	-		-
Mov Cap-1 Maneuver	~ 23	336	-	-	417	-
Mov Cap-2 Maneuver	106	-	-	-	-	-
Stage 1	162	-	-	-	-	-
Stage 2	306	-	-	-	-	-

Approach	WB	NB	SB
HCM Control Delay, s	55.5	0	1.2
HCM LOS	F		

Minor Lane/Major Mvmt	NBT	NBR	WBLn1	SBL	SBT
Capacity (veh/h)	-	-	172	417	-
HCM Lane V/C Ratio	-	-	0.624	0.23	-
HCM Control Delay (s)	-	-	55.5	16.2	-
HCM Lane LOS	-	-	F	C	-
HCM 95th %tile Q(veh)	-	-	3.5	0.9	-

Notes

~: Volume exceeds capacity $: Delay exceeds 300s +: Computation Not Defined *: All major volume in platoon

Intersection	
Int Delay, s/veh	20.5

Movement	WBL	WBR	NBT	NBR	SBL	SBT
Vol, veh/h	108	85	1266	218	163	1148
Conflicting Peds, #/hr	0	0	0	0	0	0
Sign Control	Stop	Stop	Free	Free	Free	Free
RT Channelized	-	None	-	None	-	None
Storage Length	0	-	-	-	350	-
Veh in Median Storage, #	1	-	0	-	-	0
Grade, %	0	-	0	-	-	0
Peak Hour Factor	95	95	95	95	95	95
Heavy Vehicles, %	1	3	2	2	2	2
Mvmt Flow	114	89	1333	229	172	1208

Major/Minor	Minor1		Major1		Major2	
Conflicting Flow All	2394	781	0	0	1562	0
Stage 1	1447	-	-	-	-	-
Stage 2	947	-	-	-	-	-
Critical Hdwy	6.82	6.96	-	-	4.14	-
Critical Hdwy Stg 1	5.82	-	-	-	-	-
Critical Hdwy Stg 2	5.82	-	-	-	-	-
Follow-up Hdwy	3.51	3.33	-	-	2.22	-
Pot Cap-1 Maneuver	~ 28	335	-	-	419	-
Stage 1	184	-	-	-	-	-
Stage 2	340	-	-	-	-	-
Platoon blocked, %			-	-		-
Mov Cap-1 Maneuver	~ 17	335	-	-	419	-
Mov Cap-2 Maneuver	~ 95	-	-	-	-	-
Stage 1	184	-	-	-	-	-
Stage 2	200	-	-	-	-	-

Approach	WB	NB	SB
HCM Control Delay, s	$ 301.5	0	2.4
HCM LOS	F		

Minor Lane/Major Mvmt	NBT	NBR	WBLn1	SBL	SBT
Capacity (veh/h)	-	-	139	419	-
HCM Lane V/C Ratio	-	-	1.462	0.409	-
HCM Control Delay (s)	-	-	$ 301.5	19.4	-
HCM Lane LOS	-	-	F	C	-
HCM 95th %tile Q(veh)	-	-	13.6	2	-

Notes

~: Volume exceeds capacity $: Delay exceeds 300s +: Computation Not Defined *: All major volume in platoon

Lane Group	EBL	EBT	EBR	WBL	WBT	WBR	NBL	NBT	NBR	SBL	SBT	SBR
Lane Configurations												
Volume (vph)	169	121	162	108	51	83	156	1031	164	112	1041	209
Ideal Flow (vphpl)	1900	1900	1900	1900	1900	1900	1900	1900	1900	1900	1900	1900
Lane Width (ft)	12	12	12	12	12	12	12	12	12	12	12	12
Grade (%)		0%			0%			0%			0%	
Storage Length (ft)	325		0	225		0	350		325	250		325
Storage Lanes	1		0	1		0	1		1	1		1
Taper Length (ft)	50			50			50			50		
Satd. Flow (prot)	1805	1737	0	1805	1702	0	1770	3539	1583	1770	3539	1583
Flt Permitted	0.667			0.350			0.950			0.950		
Satd. Flow (perm)	1267	1737	0	665	1702	0	1770	3539	1583	1770	3539	1583
Right Turn on Red			Yes			Yes			Yes			Yes
Satd. Flow (RTOR)		58			69				173			220
Link Speed (mph)		55			45			45			45	
Link Distance (ft)		1756			1701			1132			1277	
Travel Time (s)		21.8			25.8			17.2			19.3	
Confl. Peds. (#/hr)												
Confl. Bikes (#/hr)												
Peak Hour Factor	0.95	0.95	0.95	0.95	0.95	0.95	0.95	0.95	0.95	0.95	0.95	0.95
Growth Factor	100%	100%	100%	100%	100%	100%	100%	100%	100%	100%	100%	100%
Heavy Vehicles (%)	0%	0%	0%	0%	0%	2%	2%	2%	2%	2%	2%	2%
Bus Blockages (#/hr)	0	0	0	0	0	0	0	0	0	0	0	0
Parking (#/hr)												
Mid-Block Traffic (%)		0%			0%			0%			0%	
Shared Lane Traffic (%)												
Lane Group Flow (vph)	178	298	0	114	141	0	164	1085	173	118	1096	220
Turn Type	Perm	NA		Perm	NA		Prot	NA	Perm	Prot	NA	Perm
Protected Phases		8			4		5	2		1	6	
Permitted Phases	8			4					2			6
Detector Phase	8	8		4	4		5	2	2	1	6	6
Switch Phase												
Minimum Initial (s)	5.0	5.0		5.0	5.0		9.0	17.0	17.0	9.0	17.0	17.0
Minimum Split (s)	33.0	33.0		11.0	11.0		15.8	33.8	33.8	15.8	33.8	33.8
Total Split (s)	42.0	42.0		42.0	42.0		30.0	58.0	58.0	20.0	48.0	48.0
Total Split (%)	35.0%	35.0%		35.0%	35.0%		25.0%	48.3%	48.3%	16.7%	40.0%	40.0%
Yellow Time (s)	4.0	4.0		4.0	4.0		4.8	4.8	4.8	4.8	4.8	4.8
All-Red Time (s)	2.0	2.0		2.0	2.0		2.0	2.0	2.0	2.0	2.0	2.0
Lost Time Adjust (s)	0.0	0.0		0.0	0.0		0.0	0.0	0.0	0.0	0.0	0.0
Total Lost Time (s)	6.0	6.0		6.0	6.0		6.8	6.8	6.8	6.8	6.8	6.8
Lead/Lag							Lead	Lag	Lag	Lead	Lag	Lag
Lead-Lag Optimize?							Yes	Yes	Yes	Yes	Yes	Yes
Recall Mode	None	None		None	None		None	Min	Min	None	Min	Min
Act Effct Green (s)	19.9	19.9		19.9	19.9		14.4	38.6	38.6	11.5	35.7	35.7
Actuated g/C Ratio	0.22	0.22		0.22	0.22		0.16	0.43	0.43	0.13	0.39	0.39
v/c Ratio	0.64	0.70		0.79	0.33		0.58	0.72	0.22	0.53	0.79	0.29
Control Delay	45.0	36.4		70.4	19.3		47.3	25.2	3.7	51.2	30.3	4.4
Queue Delay	0.0	0.0		0.0	0.0		0.0	0.0	0.0	0.0	0.0	0.0
Total Delay	45.0	36.4		70.4	19.3		47.3	25.2	3.7	51.2	30.3	4.4
LOS	D	D		E	B		D	C	A	D	C	A

Lane Group	EBL	EBT	EBR	WBL	WBT	WBR	NBL	NBT	NBR	SBL	SBT	SBR
Approach Delay		39.6			42.2			25.1			28.0	
Approach LOS		D			D			C			C	

Intersection Summary	
Area Type:	Other
Cycle Length: 120	
Actuated Cycle Length: 90.5	
Natural Cycle: 85	
Control Type: Actuated-Uncoordinated	
Maximum v/c Ratio: 0.79	
Intersection Signal Delay: 29.4	Intersection LOS: C
Intersection Capacity Utilization 81.0%	ICU Level of Service D
Analysis Period (min) 15	

Splits and Phases: 24: Belle Terre Pkwy & Whiteview Pkwy

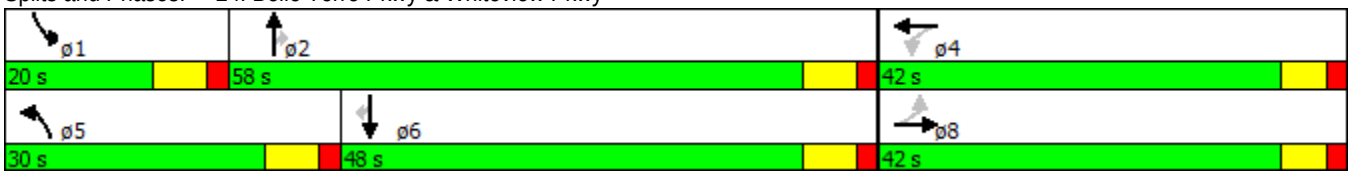

Intersection	
Int Delay, s/veh	2.4

Movement	EBL	EBR	NBL	NBT	SBT	SBR
Vol, veh/h	51	48	105	1178	1314	60
Conflicting Peds, #/hr	0	0	0	0	0	0
Sign Control	Stop	Stop	Free	Free	Free	Free
RT Channelized	-	None	-	None	-	None
Storage Length	0	-	175	-	-	-
Veh in Median Storage, #	1	-	-	0	0	-
Grade, %	0	-	-	0	0	-
Peak Hour Factor	95	95	95	95	95	95
Heavy Vehicles, %	0	3	2	2	2	2
Mvmt Flow	54	51	111	1240	1383	63

Major/Minor	Minor2		Major1		Major2	
Conflicting Flow All	2256	723	1446	0	-	0
Stage 1	1415	-	-	-	-	-
Stage 2	841	-	-	-	-	-
Critical Hdwy	6.8	6.96	4.14	-	-	-
Critical Hdwy Stg 1	5.8	-	-	-	-	-
Critical Hdwy Stg 2	5.8	-	-	-	-	-
Follow-up Hdwy	3.5	3.33	2.22	-	-	-
Pot Cap-1 Maneuver	~ 36	366	465	-	-	-
Stage 1	194	-	-	-	-	-
Stage 2	388	-	-	-	-	-
Platoon blocked, %				-	-	-
Mov Cap-1 Maneuver	~ 27	366	465	-	-	-
Mov Cap-2 Maneuver	119	-	-	-	-	-
Stage 1	194	-	-	-	-	-
Stage 2	295	-	-	-	-	-

Approach	EB	NB	SB
HCM Control Delay, s	50.9	1.2	0
HCM LOS	F		

Minor Lane/Major Mvmt	NBL	NBT	EBLn1	SBT	SBR
Capacity (veh/h)	465	-	177	-	-
HCM Lane V/C Ratio	0.238	-	0.589	-	-
HCM Control Delay (s)	15.1	-	50.9	-	-
HCM Lane LOS	C	-	F	-	-
HCM 95th %tile Q(veh)	0.9	-	3.2	-	-

Notes

~: Volume exceeds capacity $: Delay exceeds 300s +: Computation Not Defined *: All major volume in platoon

Intersection	
Int Delay, s/veh	3.6

Movement	WBL	WBR	NBT	NBR	SBL	SBT
Vol, veh/h	50	99	1137	92	154	1324
Conflicting Peds, #/hr	0	0	0	0	0	0
Sign Control	Stop	Stop	Free	Free	Free	Free
RT Channelized	-	None	-	None	-	None
Storage Length	0	-	-	-	175	-
Veh in Median Storage, #	1	-	0	-	-	0
Grade, %	0	-	0	-	-	0
Peak Hour Factor	95	95	95	95	95	95
Heavy Vehicles, %	0	1	2	2	2	2
Mvmt Flow	53	104	1197	97	162	1394

Major/Minor	Minor1		Major1		Major2	
Conflicting Flow All	2266	647	0	0	1294	0
Stage 1	1245	-	-	-	-	-
Stage 2	1021	-	-	-	-	-
Critical Hdwy	6.8	6.92	-	-	4.14	-
Critical Hdwy Stg 1	5.8	-	-	-	-	-
Critical Hdwy Stg 2	5.8	-	-	-	-	-
Follow-up Hdwy	3.5	3.31	-	-	2.22	-
Pot Cap-1 Maneuver	~ 35	416	-	-	531	-
Stage 1	239	-	-	-	-	-
Stage 2	313	-	-	-	-	-
Platoon blocked, %			-	-		-
Mov Cap-1 Maneuver	~ 24	416	-	-	531	-
Mov Cap-2 Maneuver	115	-	-	-	-	-
Stage 1	239	-	-	-	-	-
Stage 2	218	-	-	-	-	-

Approach	WB	NB	SB
HCM Control Delay, s	53.3	0	1.5
HCM LOS	F		

Minor Lane/Major Mvmt	NBT	NBR	WBLn1	SBL	SBT
Capacity (veh/h)	-	-	221	531	-
HCM Lane V/C Ratio	-	-	0.71	0.305	-
HCM Control Delay (s)	-	-	53.3	14.7	-
HCM Lane LOS	-	-	F	B	-
HCM 95th %tile Q(veh)	-	-	4.6	1.3	-

Notes

~: Volume exceeds capacity $: Delay exceeds 300s +: Computation Not Defined *: All major volume in platoon

Lane Group	WBL	WBR	NBT	NBR	SBL	SBT
Lane Configurations						
Volume (vph)	42	55	1186	50	25	1436
Ideal Flow (vphpl)	1900	1900	1900	1900	1900	1900
Lane Width (ft)	12	12	12	12	12	12
Grade (%)	0%		0%			0%
Storage Length (ft)	0	0		390	500	
Storage Lanes	1	1		1	1	
Taper Length (ft)	25				50	
Satd. Flow (prot)	1805	1615	3539	1583	1770	3539
Flt Permitted	0.950				0.146	
Satd. Flow (perm)	1805	1615	3539	1583	272	3539
Right Turn on Red		Yes		Yes		
Satd. Flow (RTOR)		58		53		
Link Speed (mph)	30		45			45
Link Distance (ft)	362		2373			662
Travel Time (s)	8.2		36.0			10.0
Confl. Peds. (#/hr)						
Confl. Bikes (#/hr)						
Peak Hour Factor	0.95	0.95	0.95	0.95	0.95	0.95
Growth Factor	100%	100%	100%	100%	100%	100%
Heavy Vehicles (%)	0%	0%	2%	2%	2%	2%
Bus Blockages (#/hr)	0	0	0	0	0	0
Parking (#/hr)						
Mid-Block Traffic (%)	0%		0%			0%
Shared Lane Traffic (%)						
Lane Group Flow (vph)	44	58	1248	53	26	1512
Turn Type	Prot	Prot	NA	Perm	pm+pt	NA
Protected Phases	4	4	6		5	2
Permitted Phases				6	2	
Detector Phase	4	4	6	6	5	2
Switch Phase						
Minimum Initial (s)	12.0	12.0	15.0	15.0	4.0	15.0
Minimum Split (s)	47.0	47.0	35.0	35.0	9.0	20.0
Total Split (s)	47.0	47.0	49.0	49.0	14.0	63.0
Total Split (%)	42.7%	42.7%	44.5%	44.5%	12.7%	57.3%
Yellow Time (s)	4.0	4.0	4.0	4.0	4.0	4.0
All-Red Time (s)	1.0	1.0	1.0	1.0	1.0	1.0
Lost Time Adjust (s)	0.0	0.0	0.0	0.0	0.0	0.0
Total Lost Time (s)	5.0	5.0	5.0	5.0	5.0	5.0
Lead/Lag			Lag	Lag	Lead	
Lead-Lag Optimize?			Yes	Yes	Yes	
Recall Mode	None	None	Min	Min	None	Min
Act Effct Green (s)	12.9	12.9	39.7	39.7	41.8	43.5
Actuated g/C Ratio	0.22	0.22	0.66	0.66	0.70	0.73
v/c Ratio	0.11	0.15	0.53	0.05	0.07	0.59
Control Delay	25.1	9.4	9.7	2.8	4.0	6.8
Queue Delay	0.0	0.0	0.0	0.0	0.0	0.0
Total Delay	25.1	9.4	9.7	2.8	4.0	6.8
LOS	C	A	A	A	A	A

Lane Group	WBL	WBR	NBT	NBR	SBL	SBT
Approach Delay	16.2		9.4			6.8
Approach LOS	B		A			A

Intersection Summary	
Area Type:	Other
Cycle Length: 110	
Actuated Cycle Length: 59.7	
Natural Cycle: 95	
Control Type: Actuated-Uncoordinated	
Maximum v/c Ratio: 0.59	
Intersection Signal Delay: 8.3	Intersection LOS: A
Intersection Capacity Utilization 58.0%	ICU Level of Service B
Analysis Period (min) 15	

Splits and Phases: 27: Belle Terre Pkwy & School Entrance

Lane Group	WBL	WBR	NBT	NBR	SBL	SBT	ø4
Lane Configurations							
Volume (vph)	210	149	1012	229	170	1251	
Ideal Flow (vphpl)	1900	1900	1900	1900	1900	1900	
Lane Width (ft)	12	12	12	12	12	12	
Grade (%)	0%		0%			0%	
Storage Length (ft)	275	0		0	175		
Storage Lanes	1	1		0	1		
Taper Length (ft)	25				50		
Satd. Flow (prot)	1787	1615	3440	0	1770	3539	
Flt Permitted	0.950				0.124		
Satd. Flow (perm)	1787	1615	3440	0	231	3539	
Right Turn on Red		Yes		Yes			
Satd. Flow (RTOR)		157	22				
Link Speed (mph)	30		45			45	
Link Distance (ft)	890		234			3685	
Travel Time (s)	20.2		3.5			55.8	
Confl. Peds. (#/hr)							
Confl. Bikes (#/hr)							
Peak Hour Factor	0.95	0.95	0.95	0.95	0.95	0.95	
Growth Factor	100%	100%	100%	100%	100%	100%	
Heavy Vehicles (%)	1%	0%	2%	2%	2%	2%	
Bus Blockages (#/hr)	0	0	0	0	0	0	
Parking (#/hr)							
Mid-Block Traffic (%)	0%		0%			0%	
Shared Lane Traffic (%)							
Lane Group Flow (vph)	221	157	1306	0	179	1317	
Turn Type	Prot	Prot	NA		pm+pt	NA	
Protected Phases	3	3	6		5	2	4
Permitted Phases					2		
Detector Phase	3	3	6		5	2	
Switch Phase							
Minimum Initial (s)	4.0	4.0	10.0		4.0	10.0	1.0
Minimum Split (s)	9.0	9.0	47.0		8.0	15.0	47.0
Total Split (s)	28.0	28.0	47.0		8.0	55.0	47.0
Total Split (%)	21.5%	21.5%	36.2%		6.2%	42.3%	36%
Yellow Time (s)	4.0	4.0	4.0		3.0	4.0	4.0
All-Red Time (s)	1.0	1.0	1.0		1.0	1.0	1.0
Lost Time Adjust (s)	0.0	0.0	0.0		0.0	0.0	
Total Lost Time (s)	5.0	5.0	5.0		4.0	5.0	
Lead/Lag	Lead	Lead	Lag		Lead		Lag
Lead-Lag Optimize?	Yes	Yes	Yes		Yes		Yes
Recall Mode	None	None	Max		None	Max	None
Act Effct Green (s)	14.4	14.4	42.1		51.1	50.1	
Actuated g/C Ratio	0.19	0.19	0.57		0.69	0.67	
v/c Ratio	0.64	0.36	0.67		0.74	0.55	
Control Delay	36.6	7.1	13.8		27.5	7.9	
Queue Delay	0.0	0.0	0.0		0.0	0.0	
Total Delay	36.6	7.1	13.8		27.5	7.9	
LOS	D	A	B		C	A	

Lane Group	WBL	WBR	NBT	NBR	SBL	SBT	ø4
Approach Delay	24.4		13.8			10.3	
Approach LOS	C		B			B	

Intersection Summary	
Area Type:	Other
Cycle Length: 130	
Actuated Cycle Length: 74.5	
Natural Cycle: 135	
Control Type: Semi Act-Uncoord	
Maximum v/c Ratio: 0.74	
Intersection Signal Delay: 13.4	Intersection LOS: B
Intersection Capacity Utilization 68.0%	ICU Level of Service C
Analysis Period (min) 15	

Splits and Phases: 28: Belle Terre Pkwy & Parkview Dr (S)

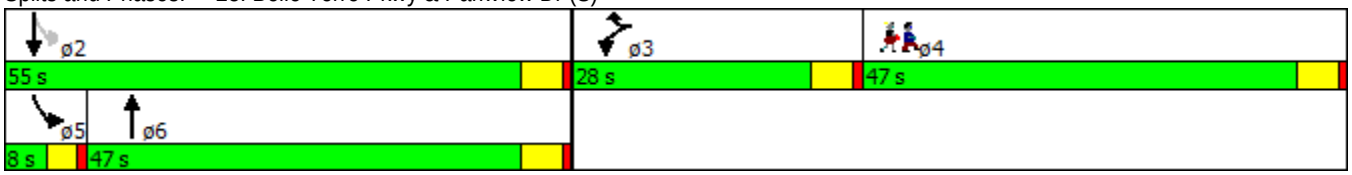

Intersection	
Int Delay, s/veh	3.2

Movement	SEL	SET	NWT	NWR	SWL	SWR
Vol, veh/h	192	1385	1143	35	36	118
Conflicting Peds, #/hr	0	0	0	0	0	0
Sign Control	Free	Free	Free	Free	Stop	Stop
RT Channelized	-	None	-	None	-	None
Storage Length	450	-	-	425	0	-
Veh in Median Storage, #	-	0	0	-	1	-
Grade, %	-	0	0	-	0	-
Peak Hour Factor	95	95	95	95	95	95
Heavy Vehicles, %	0	0	2	2	2	2
Mvmt Flow	202	1458	1203	18	38	124

Major/Minor	Major1		Major2		Minor2	
Conflicting Flow All	1203	0	-	0	2336	602
Stage 1	-	-	-	-	1203	-
Stage 2	-	-	-	-	1133	-
Critical Hdwy	4.1	-	-	-	6.84	6.94
Critical Hdwy Stg 1	-	-	-	-	5.84	-
Critical Hdwy Stg 2	-	-	-	-	5.84	-
Follow-up Hdwy	2.2	-	-	-	3.52	3.32
Pot Cap-1 Maneuver	587	-	-	-	~ 31	443
Stage 1	-	-	-	-	247	-
Stage 2	-	-	-	-	269	-
Platoon blocked, %		-	-	-		
Mov Cap-1 Maneuver	587	-	-	-	~ 20	443
Mov Cap-2 Maneuver	-	-	-	-	103	-
Stage 1	-	-	-	-	247	-
Stage 2	-	-	-	-	176	-

Approach	SE	NW	SW
HCM Control Delay, s	1.7	0	42.6
HCM LOS			E

Minor Lane/Major Mvmt	NWT	NWR	SEL	SETSWLn1	
Capacity (veh/h)	-	-	587	-	250
HCM Lane V/C Ratio	-	-	0.344	-	0.648
HCM Control Delay (s)	-	-	14.3	-	42.6
HCM Lane LOS	-	-	B	-	E
HCM 95th %tile Q(veh)	-	-	1.5	-	4

Notes

~: Volume exceeds capacity $: Delay exceeds 300s +: Computation Not Defined *: All major volume in platoon

Lane Group	SET	SER	NWL	NWT	NEL	NER
Lane Configurations						
Volume (vph)	1462	515	196	1065	450	115
Ideal Flow (vphpl)	1900	1900	1900	1900	1900	1900
Lane Width (ft)	12	12	12	12	12	12
Grade (%)	0%			0%	0%	
Storage Length (ft)		325	175		225	225
Storage Lanes		1	1		1	1
Taper Length (ft)			100		100	
Satd. Flow (prot)	3574	1599	1770	3539	3433	1583
Flt Permitted			0.102		0.950	
Satd. Flow (perm)	3574	1599	190	3539	3433	1583
Right Turn on Red		Yes				Yes
Satd. Flow (RTOR)		542				121
Link Speed (mph)	45			45	45	
Link Distance (ft)	1316			361	1297	
Travel Time (s)	19.9			5.5	19.7	
Confl. Peds. (#/hr)						
Confl. Bikes (#/hr)						
Peak Hour Factor	0.95	0.95	0.95	0.95	0.95	0.95
Growth Factor	100%	100%	100%	100%	100%	100%
Heavy Vehicles (%)	1%	1%	2%	2%	2%	2%
Bus Blockages (#/hr)	0	0	0	0	0	0
Parking (#/hr)						
Mid-Block Traffic (%)	0%			0%	0%	
Shared Lane Traffic (%)						
Lane Group Flow (vph)	1539	542	206	1121	474	121
Turn Type	NA	Perm	pm+pt	NA	Prot	Prot
Protected Phases	6		5	2	4	4
Permitted Phases		6	2			
Detector Phase	6	6	5	2	4	4
Switch Phase						
Minimum Initial (s)	20.0	20.0	4.0	20.0	6.0	6.0
Minimum Split (s)	26.8	26.8	11.0	27.0	31.8	31.8
Total Split (s)	39.0	39.0	15.0	54.0	36.0	36.0
Total Split (%)	43.3%	43.3%	16.7%	60.0%	40.0%	40.0%
Yellow Time (s)	4.8	4.8	4.8	4.8	4.8	4.8
All-Red Time (s)	2.0	2.0	2.2	2.2	2.0	2.0
Lost Time Adjust (s)	0.0	0.0	0.0	0.0	0.0	0.0
Total Lost Time (s)	6.8	6.8	7.0	7.0	6.8	6.8
Lead/Lag	Lag	Lag	Lead			
Lead-Lag Optimize?	Yes	Yes	Yes			
Recall Mode	Min	Min	None	Min	None	None
Act Effct Green (s)	32.3	32.3	47.1	47.1	15.8	15.8
Actuated g/C Ratio	0.42	0.42	0.61	0.61	0.21	0.21
v/c Ratio	1.02	0.55	0.73	0.52	0.67	0.29
Control Delay	54.0	4.0	30.3	9.9	33.0	7.0
Queue Delay	0.0	0.0	0.0	0.0	0.0	0.0
Total Delay	54.0	4.0	30.3	9.9	33.0	7.0
LOS	D	A	C	A	C	A

Lane Group	SET	SER	NWL	NWT	NEL	NER
Approach Delay	41.0			13.1	27.7	
Approach LOS	D			B	C	

Intersection Summary	
Area Type:	Other
Cycle Length: 90	
Actuated Cycle Length: 76.7	
Natural Cycle: 90	
Control Type: Actuated-Uncoordinated	
Maximum v/c Ratio: 1.02	
Intersection Signal Delay: 29.8	Intersection LOS: C
Intersection Capacity Utilization 81.3%	ICU Level of Service D
Analysis Period (min) 15	

Splits and Phases: 30: Pine Lakes Pkwy & Belle Terre Pkwy

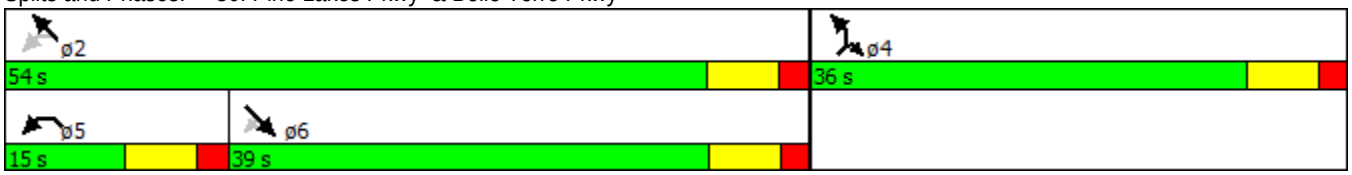

Appendix P

Build SYNCHRO Intersection Analysis Outputs for Year 2030

Lane Group	WBL	WBR	NBT	NBR	SBL	SBT
Lane Configurations						
Volume (vph)	306	79	717	155	34	1009
Ideal Flow (vphpl)	1900	1900	1900	1900	1900	1900
Lane Width (ft)	12	12	12	12	12	12
Grade (%)	0%		0%			0%
Storage Length (ft)	0	400		200	450	
Storage Lanes	1	1		1	1	
Taper Length (ft)	25				50	
Satd. Flow (prot)	1770	1583	3471	1538	1641	3406
Flt Permitted	0.950				0.950	
Satd. Flow (perm)	1770	1583	3471	1538	1641	3406
Right Turn on Red		Yes		Yes		
Satd. Flow (RTOR)		83		163		
Link Speed (mph)	50		60			60
Link Distance (ft)	1054		1255			1357
Travel Time (s)	14.4		14.3			15.4
Confl. Peds. (#/hr)						
Confl. Bikes (#/hr)						
Peak Hour Factor	0.95	0.95	0.95	0.95	0.95	0.95
Growth Factor	100%	100%	100%	100%	100%	100%
Heavy Vehicles (%)	2%	2%	4%	5%	10%	6%
Bus Blockages (#/hr)	0	0	0	0	0	0
Parking (#/hr)						
Mid-Block Traffic (%)	0%		0%			0%
Shared Lane Traffic (%)						
Lane Group Flow (vph)	322	83	755	163	36	1062
Turn Type	Prot	Prot	NA	Prot	Prot	NA
Protected Phases	4	4	6	6	5	2
Permitted Phases						
Detector Phase	4	4	6	6	5	2
Switch Phase						
Minimum Initial (s)	8.0	8.0	15.0	15.0	6.0	15.0
Minimum Split (s)	16.1	16.1	23.9	23.9	14.9	23.9
Total Split (s)	20.0	20.0	35.1	35.1	14.9	50.0
Total Split (%)	28.6%	28.6%	50.1%	50.1%	21.3%	71.4%
Yellow Time (s)	5.1	5.1	5.9	5.9	5.9	5.9
All-Red Time (s)	3.0	3.0	3.0	3.0	3.0	3.0
Lost Time Adjust (s)	0.0	0.0	0.0	0.0	0.0	0.0
Total Lost Time (s)	8.1	8.1	8.9	8.9	8.9	8.9
Lead/Lag			Lag	Lag	Lead	
Lead-Lag Optimize?			Yes	Yes	Yes	
Recall Mode	None	None	Min	Min	None	Min
Act Effct Green (s)	12.3	12.3	21.6	21.6	6.2	26.5
Actuated g/C Ratio	0.22	0.22	0.38	0.38	0.11	0.47
v/c Ratio	0.83	0.20	0.57	0.24	0.20	0.66
Control Delay	47.4	8.3	16.6	4.0	30.4	12.9
Queue Delay	0.0	0.0	0.0	0.0	0.0	0.0
Total Delay	47.4	8.3	16.6	4.0	30.4	12.9
LOS	D	A	B	A	C	B

Lane Group	WBL	WBR	NBT	NBR	SBL	SBT
Approach Delay	39.4		14.4			13.5
Approach LOS	D		B			B

Intersection Summary	
Area Type:	Other
Cycle Length: 70	
Actuated Cycle Length: 56.4	
Natural Cycle: 60	
Control Type: Actuated-Uncoordinated	
Maximum v/c Ratio: 0.83	
Intersection Signal Delay: 18.2	Intersection LOS: B
Intersection Capacity Utilization 59.4%	ICU Level of Service B
Analysis Period (min) 15	

Splits and Phases: 1: SR 5 (US 1) & Belle Terre Blvd

Intersection	
Int Delay, s/veh	1.7

Movement	EBL	EBT	EBR	WBL	WBT	WBR	NBL	NBT	NBR	SBL	SBT	SBR
Vol, veh/h	7	177	5	6	346	28	7	0	7	33	0	32
Conflicting Peds, #/hr	0	0	0	0	0	0	0	0	0	0	0	0
Sign Control	Free	Free	Free	Free	Free	Free	Stop	Stop	Stop	Stop	Stop	Stop
RT Channelized	-	-	None	-	-	None	-	-	None	-	-	None
Storage Length	-	-	-	-	-	-	-	-	-	-	-	-
Veh in Median Storage, #	-	0	-	-	0	-	-	0	-	-	0	-
Grade, %	-	0	-	-	0	-	-	0	-	-	0	-
Peak Hour Factor	95	95	95	95	95	95	95	95	95	95	95	95
Heavy Vehicles, %	2	2	2	2	2	2	0	0	0	7	0	0
Mvmt Flow	7	186	5	6	364	29	7	0	7	35	0	34

Major/Minor	Major1			Major2			Minor1			Minor2		
Conflicting Flow All	394	0	0	192	0	0	612	610	189	599	598	379
Stage 1	-	-	-	-	-	-	204	204	-	392	392	-
Stage 2	-	-	-	-	-	-	408	406	-	207	206	-
Critical Hdwy	4.12	-	-	4.12	-	-	7.1	6.5	6.2	7.17	6.5	6.2
Critical Hdwy Stg 1	-	-	-	-	-	-	6.1	5.5	-	6.17	5.5	-
Critical Hdwy Stg 2	-	-	-	-	-	-	6.1	5.5	-	6.17	5.5	-
Follow-up Hdwy	2.218	-	-	2.218	-	-	3.5	4	3.3	3.563	4	3.3
Pot Cap-1 Maneuver	1165	-	-	1381	-	-	408	412	858	406	418	672
Stage 1	-	-	-	-	-	-	803	737	-	623	610	-
Stage 2	-	-	-	-	-	-	624	601	-	784	735	-
Platoon blocked, %		-	-		-	-						
Mov Cap-1 Maneuver	1165	-	-	1381	-	-	384	407	858	399	413	672
Mov Cap-2 Maneuver	-	-	-	-	-	-	384	407	-	399	413	-
Stage 1	-	-	-	-	-	-	797	732	-	619	606	-
Stage 2	-	-	-	-	-	-	589	597	-	772	730	-

Approach	EB	WB	NB	SB
HCM Control Delay, s	0.3	0.1	12	13.4
HCM LOS			B	B

Minor Lane/Major Mvmt	NBLn1	EBL	EBT	EBR	WBL	WBT	WBR	SBLn1
Capacity (veh/h)	531	1165	-	-	1381	-	-	499
HCM Lane V/C Ratio	0.028	0.006	-	-	0.005	-	-	0.137
HCM Control Delay (s)	12	8.1	0	-	7.6	0	-	13.4
HCM Lane LOS	B	A	A	-	A	A	-	B
HCM 95th %tile Q(veh)	0.1	0	-	-	0	-	-	0.5

Intersection	
Int Delay, s/veh	0.7

Movement	EBT	EBR	WBL	WBT	NBL	NBR
Vol, veh/h	211	6	5	368	12	24
Conflicting Peds, #/hr	0	0	0	0	0	0
Sign Control	Free	Free	Free	Free	Stop	Stop
RT Channelized	-	None	-	None	-	None
Storage Length	-	-	-	-	0	-
Veh in Median Storage, #	0	-	-	0	0	-
Grade, %	0	-	-	0	0	-
Peak Hour Factor	95	95	95	95	95	95
Heavy Vehicles, %	2	2	2	2	0	0
Mvmt Flow	222	6	5	387	13	25

Major/Minor	Major1		Major2		Minor1	
Conflicting Flow All	0	0	228	0	623	225
Stage 1	-	-	-	-	225	-
Stage 2	-	-	-	-	398	-
Critical Hdwy	-	-	4.12	-	6.4	6.2
Critical Hdwy Stg 1	-	-	-	-	5.4	-
Critical Hdwy Stg 2	-	-	-	-	5.4	-
Follow-up Hdwy	-	-	2.218	-	3.5	3.3
Pot Cap-1 Maneuver	-	-	1340	-	453	819
Stage 1	-	-	-	-	817	-
Stage 2	-	-	-	-	683	-
Platoon blocked, %	-	-		-		
Mov Cap-1 Maneuver	-	-	1340	-	451	819
Mov Cap-2 Maneuver	-	-	-	-	451	-
Stage 1	-	-	-	-	817	-
Stage 2	-	-	-	-	680	-

Approach	EB	WB	NB
HCM Control Delay, s	0	0.1	10.9
HCM LOS			B

Minor Lane/Major Mvmt	NBLn1	EBT	EBR	WBL	WBT
Capacity (veh/h)	644	-	-	1340	-
HCM Lane V/C Ratio	0.059	-	-	0.004	-
HCM Control Delay (s)	10.9	-	-	7.7	0
HCM Lane LOS	B	-	-	A	A
HCM 95th %tile Q(veh)	0.2	-	-	0	-

Intersection	
Int Delay, s/veh	1.5

Movement	EBL	EBT	EBR	WBL	WBT	WBR	NBL	NBT	NBR	SBL	SBT	SBR
Vol, veh/h	12	213	10	10	354	5	9	2	38	10	2	10
Conflicting Peds, #/hr	0	0	0	0	0	0	0	0	0	0	0	0
Sign Control	Free	Free	Free	Free	Free	Free	Stop	Stop	Stop	Stop	Stop	Stop
RT Channelized	-	-	None	-	-	None	-	-	None	-	-	None
Storage Length	-	-	-	-	-	-	-	-	-	-	-	-
Veh in Median Storage, #	-	0	-	-	0	-	-	0	-	-	0	-
Grade, %	-	0	-	-	0	-	-	0	-	-	0	-
Peak Hour Factor	95	95	95	95	95	95	95	95	95	95	95	95
Heavy Vehicles, %	2	2	2	2	2	2	0	0	13	0	0	0
Mvmt Flow	13	224	11	11	373	5	9	2	40	11	2	11

Major/Minor	Major1			Major2			Minor1			Minor2		
Conflicting Flow All	378	0	0	235	0	0	658	654	229	672	656	375
Stage 1	-	-	-	-	-	-	255	255	-	396	396	-
Stage 2	-	-	-	-	-	-	403	399	-	276	260	-
Critical Hdwy	4.12	-	-	4.12	-	-	7.1	6.5	6.33	7.1	6.5	6.2
Critical Hdwy Stg 1	-	-	-	-	-	-	6.1	5.5	-	6.1	5.5	-
Critical Hdwy Stg 2	-	-	-	-	-	-	6.1	5.5	-	6.1	5.5	-
Follow-up Hdwy	2.218	-	-	2.218	-	-	3.5	4	3.417	3.5	4	3.3
Pot Cap-1 Maneuver	1180	-	-	1332	-	-	380	389	784	372	388	676
Stage 1	-	-	-	-	-	-	754	700	-	633	607	-
Stage 2	-	-	-	-	-	-	628	606	-	735	697	-
Platoon blocked, %		-	-		-	-						
Mov Cap-1 Maneuver	1180	-	-	1332	-	-	366	380	784	345	379	676
Mov Cap-2 Maneuver	-	-	-	-	-	-	366	380	-	345	379	-
Stage 1	-	-	-	-	-	-	744	691	-	625	601	-
Stage 2	-	-	-	-	-	-	610	600	-	686	688	-

Approach	EB	WB	NB	SB
HCM Control Delay, s	0.4	0.2	11.3	13.5
HCM LOS			B	B

Minor Lane/Major Mvmt	NBLn1	EBL	EBT	EBR	WBL	WBT	WBR	SBLn1
Capacity (veh/h)	626	1180	-	-	1332	-	-	448
HCM Lane V/C Ratio	0.082	0.011	-	-	0.008	-	-	0.052
HCM Control Delay (s)	11.3	8.1	0	-	7.7	0	-	13.5
HCM Lane LOS	B	A	A	-	A	A	-	B
HCM 95th %tile Q(veh)	0.3	0	-	-	0	-	-	0.2

Intersection	
Int Delay, s/veh	1.1

Movement	EBT	EBR	WBL	WBT	NBL	NBR
Vol, veh/h	246	15	15	360	9	55
Conflicting Peds, #/hr	0	0	0	0	0	0
Sign Control	Free	Free	Free	Free	Stop	Stop
RT Channelized	-	None	-	None	-	None
Storage Length	-	-	-	-	0	-
Veh in Median Storage, #	0	-	-	0	0	-
Grade, %	0	-	-	0	0	-
Peak Hour Factor	95	95	95	95	95	95
Heavy Vehicles, %	2	2	2	2	14	0
Mvmt Flow	259	16	16	379	9	58

Major/Minor	Major1		Major2		Minor1	
Conflicting Flow All	0	0	275	0	678	267
Stage 1	-	-	-	-	267	-
Stage 2	-	-	-	-	411	-
Critical Hdwy	-	-	4.12	-	6.54	6.2
Critical Hdwy Stg 1	-	-	-	-	5.54	-
Critical Hdwy Stg 2	-	-	-	-	5.54	-
Follow-up Hdwy	-	-	2.218	-	3.626	3.3
Pot Cap-1 Maneuver	-	-	1288	-	400	777
Stage 1	-	-	-	-	751	-
Stage 2	-	-	-	-	644	-
Platoon blocked, %	-	-		-		
Mov Cap-1 Maneuver	-	-	1288	-	394	777
Mov Cap-2 Maneuver	-	-	-	-	394	-
Stage 1	-	-	-	-	751	-
Stage 2	-	-	-	-	634	-

Approach	EB	WB	NB
HCM Control Delay, s	0	0.3	10.8
HCM LOS			B

Minor Lane/Major Mvmt	NBLn1	EBT	EBR	WBL	WBT
Capacity (veh/h)	684	-	-	1288	-
HCM Lane V/C Ratio	0.098	-	-	0.012	-
HCM Control Delay (s)	10.8	-	-	7.8	0
HCM Lane LOS	B	-	-	A	A
HCM 95th %tile Q(veh)	0.3	-	-	0	-

Intersection	
Int Delay, s/veh	1.1

Movement	WBL	WBR	NBT	NBR	SBL	SBT
Vol, veh/h	32	20	288	13	8	347
Conflicting Peds, #/hr	0	0	0	0	0	0
Sign Control	Stop	Stop	Free	Free	Free	Free
RT Channelized	-	None	-	None	-	None
Storage Length	0	-	-	-	-	-
Veh in Median Storage, #	0	-	0	-	-	0
Grade, %	0	-	0	-	-	0
Peak Hour Factor	95	95	95	95	95	95
Heavy Vehicles, %	0	0	2	2	2	2
Mvmt Flow	34	21	303	14	8	365

Major/Minor	Minor1		Major1		Major2	
Conflicting Flow All	692	310	0	0	317	0
Stage 1	310	-	-	-	-	-
Stage 2	382	-	-	-	-	-
Critical Hdwy	6.4	6.2	-	-	4.12	-
Critical Hdwy Stg 1	5.4	-	-	-	-	-
Critical Hdwy Stg 2	5.4	-	-	-	-	-
Follow-up Hdwy	3.5	3.3	-	-	2.218	-
Pot Cap-1 Maneuver	413	735	-	-	1243	-
Stage 1	748	-	-	-	-	-
Stage 2	694	-	-	-	-	-
Platoon blocked, %			-	-		-
Mov Cap-1 Maneuver	410	735	-	-	1243	-
Mov Cap-2 Maneuver	410	-	-	-	-	-
Stage 1	748	-	-	-	-	-
Stage 2	688	-	-	-	-	-

Approach	WB	NB	SB
HCM Control Delay, s	13.2	0	0.2
HCM LOS	B		

Minor Lane/Major Mvmt	NBT	NBR	WBLn1	SBL	SBT
Capacity (veh/h)	-	-	494	1243	-
HCM Lane V/C Ratio	-	-	0.111	0.007	-
HCM Control Delay (s)	-	-	13.2	7.9	0
HCM Lane LOS	-	-	B	A	A
HCM 95th %tile Q(veh)	-	-	0.4	0	-

Intersection	
Int Delay, s/veh	1

Movement	EBL	EBR	NBL	NBT	SBT	SBR
Vol, veh/h	21	34	8	300	321	28
Conflicting Peds, #/hr	0	0	0	0	0	0
Sign Control	Stop	Stop	Free	Free	Free	Free
RT Channelized	-	None	-	None	-	None
Storage Length	0	-	-	-	-	-
Veh in Median Storage, #	0	-	-	0	0	-
Grade, %	0	-	-	0	0	-
Peak Hour Factor	95	95	95	95	95	95
Heavy Vehicles, %	0	6	2	2	2	2
Mvmt Flow	22	36	8	316	338	29

Major/Minor	Minor2		Major1		Major2	
Conflicting Flow All	686	353	367	0	-	0
Stage 1	353	-	-	-	-	-
Stage 2	333	-	-	-	-	-
Critical Hdwy	6.4	6.26	4.12	-	-	-
Critical Hdwy Stg 1	5.4	-	-	-	-	-
Critical Hdwy Stg 2	5.4	-	-	-	-	-
Follow-up Hdwy	3.5	3.354	2.218	-	-	-
Pot Cap-1 Maneuver	416	682	1192	-	-	-
Stage 1	716	-	-	-	-	-
Stage 2	731	-	-	-	-	-
Platoon blocked, %				-	-	-
Mov Cap-1 Maneuver	413	682	1192	-	-	-
Mov Cap-2 Maneuver	413	-	-	-	-	-
Stage 1	716	-	-	-	-	-
Stage 2	725	-	-	-	-	-

Approach	EB	NB	SB
HCM Control Delay, s	12.4	0.2	0
HCM LOS	B		

Minor Lane/Major Mvmt	NBL	NBT	EBLn1	SBT	SBR
Capacity (veh/h)	1192	-	546	-	-
HCM Lane V/C Ratio	0.007	-	0.106	-	-
HCM Control Delay (s)	8	0	12.4	-	-
HCM Lane LOS	A	A	B	-	-
HCM 95th %tile Q(veh)	0	-	0.4	-	-

Intersection	
Int Delay, s/veh	0.9

Movement	EBL	EBR	NBL	NBT	SBT	SBR
Vol, veh/h	18	23	12	309	326	9
Conflicting Peds, #/hr	0	0	0	0	0	0
Sign Control	Stop	Stop	Free	Free	Free	Free
RT Channelized	-	None	-	None	-	None
Storage Length	0	-	-	-	-	-
Veh in Median Storage, #	0	-	-	0	0	-
Grade, %	0	-	-	0	0	-
Peak Hour Factor	95	95	95	95	95	95
Heavy Vehicles, %	0	0	2	2	2	2
Mvmt Flow	19	24	13	325	343	9

Major/Minor	Minor2		Major1		Major2	
Conflicting Flow All	699	348	353	0	-	0
Stage 1	348	-	-	-	-	-
Stage 2	351	-	-	-	-	-
Critical Hdwy	6.4	6.2	4.12	-	-	-
Critical Hdwy Stg 1	5.4	-	-	-	-	-
Critical Hdwy Stg 2	5.4	-	-	-	-	-
Follow-up Hdwy	3.5	3.3	2.218	-	-	-
Pot Cap-1 Maneuver	409	700	1206	-	-	-
Stage 1	719	-	-	-	-	-
Stage 2	717	-	-	-	-	-
Platoon blocked, %				-	-	-
Mov Cap-1 Maneuver	404	700	1206	-	-	-
Mov Cap-2 Maneuver	404	-	-	-	-	-
Stage 1	719	-	-	-	-	-
Stage 2	708	-	-	-	-	-

Approach	EB	NB	SB
HCM Control Delay, s	12.4	0.3	0
HCM LOS	B		

Minor Lane/Major Mvmt	NBL	NBT	EBLn1	SBT	SBR
Capacity (veh/h)	1206	-	530	-	-
HCM Lane V/C Ratio	0.01	-	0.081	-	-
HCM Control Delay (s)	8	0	12.4	-	-
HCM Lane LOS	A	A	B	-	-
HCM 95th %tile Q(veh)	0	-	0.3	-	-

Intersection	
Int Delay, s/veh	1.8

Movement	WBL	WBR	NBT	NBR	SBL	SBT
Vol, veh/h	21	70	307	20	34	314
Conflicting Peds, #/hr	0	0	0	0	0	0
Sign Control	Stop	Stop	Free	Free	Free	Free
RT Channelized	-	None	-	None	-	None
Storage Length	0	-	-	-	-	-
Veh in Median Storage, #	0	-	0	-	-	0
Grade, %	0	-	0	-	-	0
Peak Hour Factor	95	95	95	95	95	95
Heavy Vehicles, %	7	5	2	2	2	2
Mvmt Flow	22	74	323	21	36	331

Major/Minor	Minor1		Major1		Major2	
Conflicting Flow All	736	334	0	0	344	0
Stage 1	334	-	-	-	-	-
Stage 2	402	-	-	-	-	-
Critical Hdwy	6.47	6.25	-	-	4.12	-
Critical Hdwy Stg 1	5.47	-	-	-	-	-
Critical Hdwy Stg 2	5.47	-	-	-	-	-
Follow-up Hdwy	3.563	3.345	-	-	2.218	-
Pot Cap-1 Maneuver	379	701	-	-	1215	-
Stage 1	714	-	-	-	-	-
Stage 2	665	-	-	-	-	-
Platoon blocked, %			-	-		-
Mov Cap-1 Maneuver	365	701	-	-	1215	-
Mov Cap-2 Maneuver	365	-	-	-	-	-
Stage 1	714	-	-	-	-	-
Stage 2	641	-	-	-	-	-

Approach	WB	NB	SB
HCM Control Delay, s	12.5	0	0.8
HCM LOS	B		

Minor Lane/Major Mvmt	NBT	NBR	WBLn1	SBL	SBT
Capacity (veh/h)	-	-	578	1215	-
HCM Lane V/C Ratio	-	-	0.166	0.029	-
HCM Control Delay (s)	-	-	12.5	8.1	0
HCM Lane LOS	-	-	B	A	A
HCM 95th %tile Q(veh)	-	-	0.6	0.1	-

Intersection	
Int Delay, s/veh	0.8

Movement	EBL	EBR	NBL	NBT	SBT	SBR
Vol, veh/h	28	15	2	375	333	21
Conflicting Peds, #/hr	0	0	0	0	0	0
Sign Control	Stop	Stop	Free	Free	Free	Free
RT Channelized	-	None	-	None	-	None
Storage Length	0	-	-	-	-	-
Veh in Median Storage, #	0	-	-	0	0	-
Grade, %	0	-	-	0	0	-
Peak Hour Factor	95	95	95	95	95	95
Heavy Vehicles, %	0	0	2	2	2	2
Mvmt Flow	29	16	2	395	351	22

Major/Minor	Minor2		Major1		Major2	
Conflicting Flow All	761	362	373	0	-	0
Stage 1	362	-	-	-	-	-
Stage 2	399	-	-	-	-	-
Critical Hdwy	6.4	6.2	4.12	-	-	-
Critical Hdwy Stg 1	5.4	-	-	-	-	-
Critical Hdwy Stg 2	5.4	-	-	-	-	-
Follow-up Hdwy	3.5	3.3	2.218	-	-	-
Pot Cap-1 Maneuver	376	687	1185	-	-	-
Stage 1	709	-	-	-	-	-
Stage 2	682	-	-	-	-	-
Platoon blocked, %				-	-	-
Mov Cap-1 Maneuver	375	687	1185	-	-	-
Mov Cap-2 Maneuver	375	-	-	-	-	-
Stage 1	709	-	-	-	-	-
Stage 2	681	-	-	-	-	-

Approach	EB	NB	SB
HCM Control Delay, s	14	0	0
HCM LOS	B		

Minor Lane/Major Mvmt	NBL	NBT	EBLn1	SBT	SBR
Capacity (veh/h)	1185	-	446	-	-
HCM Lane V/C Ratio	0.002	-	0.101	-	-
HCM Control Delay (s)	8	0	14	-	-
HCM Lane LOS	A	A	B	-	-
HCM 95th %tile Q(veh)	0	-	0.3	-	-

Intersection	
Int Delay, s/veh	0.4

Movement	EBL	EBR	NBL	NBT	SBT	SBR
Vol, veh/h	14	10	2	401	347	15
Conflicting Peds, #/hr	0	0	0	0	0	0
Sign Control	Stop	Stop	Free	Free	Free	Free
RT Channelized	-	None	-	None	-	None
Storage Length	0	-	-	-	-	-
Veh in Median Storage, #	0	-	-	0	0	-
Grade, %	0	-	-	0	0	-
Peak Hour Factor	95	95	95	95	95	95
Heavy Vehicles, %	0	0	2	2	2	2
Mvmt Flow	15	11	2	422	365	16

Major/Minor	Minor2		Major1		Major2	
Conflicting Flow All	799	373	381	0	-	0
Stage 1	373	-	-	-	-	-
Stage 2	426	-	-	-	-	-
Critical Hdwy	6.4	6.2	4.12	-	-	-
Critical Hdwy Stg 1	5.4	-	-	-	-	-
Critical Hdwy Stg 2	5.4	-	-	-	-	-
Follow-up Hdwy	3.5	3.3	2.218	-	-	-
Pot Cap-1 Maneuver	357	678	1177	-	-	-
Stage 1	701	-	-	-	-	-
Stage 2	663	-	-	-	-	-
Platoon blocked, %				-	-	-
Mov Cap-1 Maneuver	356	678	1177	-	-	-
Mov Cap-2 Maneuver	356	-	-	-	-	-
Stage 1	701	-	-	-	-	-
Stage 2	662	-	-	-	-	-

Approach	EB	NB	SB
HCM Control Delay, s	13.6	0	0
HCM LOS	B		

Minor Lane/Major Mvmt	NBL	NBT	EBLn1	SBT	SBR
Capacity (veh/h)	1177	-	444	-	-
HCM Lane V/C Ratio	0.002	-	0.057	-	-
HCM Control Delay (s)	8.1	0	13.6	-	-
HCM Lane LOS	A	A	B	-	-
HCM 95th %tile Q(veh)	0	-	0.2	-	-

Intersection	
Int Delay, s/veh	0.6

Movement	EBL	EBR	NBL	NBT	SBT	SBR
Vol, veh/h	23	8	5	410	354	15
Conflicting Peds, #/hr	0	0	0	0	0	0
Sign Control	Stop	Stop	Free	Free	Free	Free
RT Channelized	-	None	-	None	-	None
Storage Length	0	-	-	-	-	-
Veh in Median Storage, #	0	-	-	0	0	-
Grade, %	0	-	-	0	0	-
Peak Hour Factor	95	95	95	95	95	95
Heavy Vehicles, %	0	40	2	2	2	2
Mvmt Flow	24	8	5	432	373	16

Major/Minor	Minor2		Major1		Major2	
Conflicting Flow All	823	381	388	0	-	0
Stage 1	381	-	-	-	-	-
Stage 2	442	-	-	-	-	-
Critical Hdwy	6.4	6.6	4.12	-	-	-
Critical Hdwy Stg 1	5.4	-	-	-	-	-
Critical Hdwy Stg 2	5.4	-	-	-	-	-
Follow-up Hdwy	3.5	3.66	2.218	-	-	-
Pot Cap-1 Maneuver	346	590	1170	-	-	-
Stage 1	695	-	-	-	-	-
Stage 2	652	-	-	-	-	-
Platoon blocked, %				-	-	-
Mov Cap-1 Maneuver	344	590	1170	-	-	-
Mov Cap-2 Maneuver	344	-	-	-	-	-
Stage 1	695	-	-	-	-	-
Stage 2	648	-	-	-	-	-

Approach	EB	NB	SB
HCM Control Delay, s	15.2	0.1	0
HCM LOS	C		

Minor Lane/Major Mvmt	NBL	NBT	EBLn1	SBT	SBR
Capacity (veh/h)	1170	-	385	-	-
HCM Lane V/C Ratio	0.004	-	0.085	-	-
HCM Control Delay (s)	8.1	0	15.2	-	-
HCM Lane LOS	A	A	C	-	-
HCM 95th %tile Q(veh)	0	-	0.3	-	-

Intersection	
Int Delay, s/veh	0.8

Movement	EBL	EBR	NBL	NBT	SBT	SBR
Vol, veh/h	21	22	12	421	347	15
Conflicting Peds, #/hr	0	0	0	0	0	0
Sign Control	Stop	Stop	Free	Free	Free	Free
RT Channelized	-	None	-	None	-	None
Storage Length	0	-	-	-	-	-
Veh in Median Storage, #	0	-	-	0	0	-
Grade, %	0	-	-	0	0	-
Peak Hour Factor	95	95	95	95	95	95
Heavy Vehicles, %	0	0	2	2	2	2
Mvmt Flow	22	23	13	443	365	16

Major/Minor	Minor2		Major1		Major2	
Conflicting Flow All	841	373	381	0	-	0
Stage 1	373	-	-	-	-	-
Stage 2	468	-	-	-	-	-
Critical Hdwy	6.4	6.2	4.12	-	-	-
Critical Hdwy Stg 1	5.4	-	-	-	-	-
Critical Hdwy Stg 2	5.4	-	-	-	-	-
Follow-up Hdwy	3.5	3.3	2.218	-	-	-
Pot Cap-1 Maneuver	338	678	1177	-	-	-
Stage 1	701	-	-	-	-	-
Stage 2	634	-	-	-	-	-
Platoon blocked, %				-	-	-
Mov Cap-1 Maneuver	333	678	1177	-	-	-
Mov Cap-2 Maneuver	333	-	-	-	-	-
Stage 1	701	-	-	-	-	-
Stage 2	624	-	-	-	-	-

Approach	EB	NB	SB
HCM Control Delay, s	13.9	0.2	0
HCM LOS	B		

Minor Lane/Major Mvmt	NBL	NBT	EBLn1	SBT	SBR
Capacity (veh/h)	1177	-	450	-	-
HCM Lane V/C Ratio	0.011	-	0.101	-	-
HCM Control Delay (s)	8.1	0	13.9	-	-
HCM Lane LOS	A	A	B	-	-
HCM 95th %tile Q(veh)	0	-	0.3	-	-

Intersection	
Int Delay, s/veh	1.7

Movement	EBL	EBR	NBL	NBT	SBT	SBR
Vol, veh/h	70	6	6	436	356	25
Conflicting Peds, #/hr	0	0	0	0	0	0
Sign Control	Stop	Stop	Free	Free	Free	Free
RT Channelized	-	None	-	None	-	None
Storage Length	0	-	-	-	-	-
Veh in Median Storage, #	0	-	-	0	0	-
Grade, %	0	-	-	0	0	-
Peak Hour Factor	95	95	95	95	95	95
Heavy Vehicles, %	6	0	2	2	2	2
Mvmt Flow	74	6	6	459	375	26

Major/Minor	Minor2		Major1		Major2	
Conflicting Flow All	860	388	401	0	-	0
Stage 1	388	-	-	-	-	-
Stage 2	472	-	-	-	-	-
Critical Hdwy	6.46	6.2	4.12	-	-	-
Critical Hdwy Stg 1	5.46	-	-	-	-	-
Critical Hdwy Stg 2	5.46	-	-	-	-	-
Follow-up Hdwy	3.554	3.3	2.218	-	-	-
Pot Cap-1 Maneuver	321	665	1158	-	-	-
Stage 1	677	-	-	-	-	-
Stage 2	619	-	-	-	-	-
Platoon blocked, %				-	-	-
Mov Cap-1 Maneuver	319	665	1158	-	-	-
Mov Cap-2 Maneuver	319	-	-	-	-	-
Stage 1	677	-	-	-	-	-
Stage 2	615	-	-	-	-	-

Approach	EB	NB	SB
HCM Control Delay, s	19.2	0.1	0
HCM LOS	C		

Minor Lane/Major Mvmt	NBL	NBT	EBLn1	SBT	SBR
Capacity (veh/h)	1158	-	333	-	-
HCM Lane V/C Ratio	0.005	-	0.24	-	-
HCM Control Delay (s)	8.1	0	19.2	-	-
HCM Lane LOS	A	A	C	-	-
HCM 95th %tile Q(veh)	0	-	0.9	-	-

Lane Group	EBL	EBT	EBR	WBL	WBT	WBR	NBL	NBT	NBR	SBL	SBT	SBR
Lane Configurations												
Volume (vph)	153	421	33	117	580	404	81	244	181	584	231	394
Ideal Flow (vphpl)	1900	1900	1900	1900	1900	1900	1900	1900	1900	1900	1900	1900
Lane Width (ft)	12	12	12	12	12	12	12	12	12	12	12	12
Grade (%)		0%			0%			0%			0%	
Storage Length (ft)	450		475	485		485	0		280	525		0
Storage Lanes	2		1	1		1	1		1	2		1
Taper Length (ft)	50			50			200			25		
Satd. Flow (prot)	3183	3374	1615	1656	3438	1509	1770	1863	1583	3433	1863	1583
Flt Permitted	0.950			0.950			0.950			0.950		
Satd. Flow (perm)	3183	3374	1615	1656	3438	1509	1770	1863	1583	3433	1863	1583
Right Turn on Red			Yes			Yes			Yes			Yes
Satd. Flow (RTOR)			242			240			244			373
Link Speed (mph)		55			55			50			45	
Link Distance (ft)		2394			2403			1138			1482	
Travel Time (s)		29.7			29.8			15.5			22.5	
Confl. Peds. (#/hr)												
Confl. Bikes (#/hr)												
Peak Hour Factor	0.95	0.95	0.95	0.95	0.95	0.95	0.95	0.95	0.95	0.95	0.95	0.95
Growth Factor	100%	100%	100%	100%	100%	100%	100%	100%	100%	100%	100%	100%
Heavy Vehicles (%)	10%	7%	0%	9%	5%	7%	2%	2%	2%	2%	2%	2%
Bus Blockages (#/hr)	0	0	0	0	0	0	0	0	0	0	0	0
Parking (#/hr)												
Mid-Block Traffic (%)		0%			0%			0%			0%	
Shared Lane Traffic (%)												
Lane Group Flow (vph)	161	443	35	123	611	425	85	257	191	615	243	415
Turn Type	Prot	NA	Prot	Prot	NA	pm+ov	Prot	NA	Perm	Prot	NA	Perm
Protected Phases	1	6	6	5	2	3	7	4		3	8	
Permitted Phases						2			4			8
Detector Phase	1	6	6	5	2	3	7	4	4	3	8	8
Switch Phase												
Minimum Initial (s)	5.0	17.0	17.0	5.0	17.0	10.0	10.0	6.0	6.0	10.0	6.0	6.0
Minimum Split (s)	13.8	25.8	25.8	13.8	44.8	18.2	18.5	14.5	14.5	18.2	51.2	51.2
Total Split (s)	25.3	40.6	40.6	29.7	45.0	27.8	18.5	41.9	41.9	27.8	51.2	51.2
Total Split (%)	18.1%	29.0%	29.0%	21.2%	32.1%	19.9%	13.2%	29.9%	29.9%	19.9%	36.6%	36.6%
Yellow Time (s)	6.0	6.0	6.0	6.0	6.0	4.8	5.1	5.1	5.1	4.8	4.8	4.8
All-Red Time (s)	2.8	2.8	2.8	2.8	2.8	3.4	3.4	3.4	3.4	3.4	3.4	3.4
Lost Time Adjust (s)	0.0	0.0	0.0	0.0	0.0	0.0	0.0	0.0	0.0	0.0	0.0	0.0
Total Lost Time (s)	8.8	8.8	8.8	8.8	8.8	8.2	8.5	8.5	8.5	8.2	8.2	8.2
Lead/Lag	Lead	Lag	Lag	Lead	Lag	Lead	Lead	Lag	Lag	Lead	Lag	Lag
Lead-Lag Optimize?	Yes	Yes	Yes	Yes	Yes	Yes	Yes	Yes	Yes	Yes	Yes	Yes
Recall Mode	None	Min	Min	None	Min	Min	None	None	None	Min	None	None
Act Effct Green (s)	11.3	23.4	23.4	14.0	26.0	55.0	10.2	21.4	21.4	20.0	31.2	31.2
Actuated g/C Ratio	0.10	0.21	0.21	0.12	0.23	0.48	0.09	0.19	0.19	0.18	0.27	0.27
v/c Ratio	0.51	0.64	0.07	0.61	0.78	0.50	0.54	0.73	0.39	1.02	0.48	0.59
Control Delay	56.7	47.0	0.2	62.5	49.3	11.0	67.2	57.5	3.9	89.1	38.9	9.3
Queue Delay	0.0	0.0	0.0	0.0	0.0	0.0	0.0	0.0	0.0	0.0	0.0	0.0
Total Delay	56.7	47.0	0.2	62.5	49.3	11.0	67.2	57.5	3.9	89.1	38.9	9.3
LOS	E	D	A	E	D	B	E	E	A	F	D	A

Lane Group	EBL	EBT	EBR	WBL	WBT	WBR	NBL	NBT	NBR	SBL	SBT	SBR
Approach Delay		46.9			36.7			39.8			53.5	
Approach LOS		D			D			D			D	

Intersection Summary	
Area Type:	Other
Cycle Length: 140	
Actuated Cycle Length: 113.7	
Natural Cycle: 130	
Control Type: Actuated-Uncoordinated	
Maximum v/c Ratio: 1.02	
Intersection Signal Delay: 44.9	Intersection LOS: D
Intersection Capacity Utilization 78.7%	ICU Level of Service D
Analysis Period (min) 15	

Splits and Phases: 15: Belle Terre Blvd/Belle Terre Pkwy & SR 100

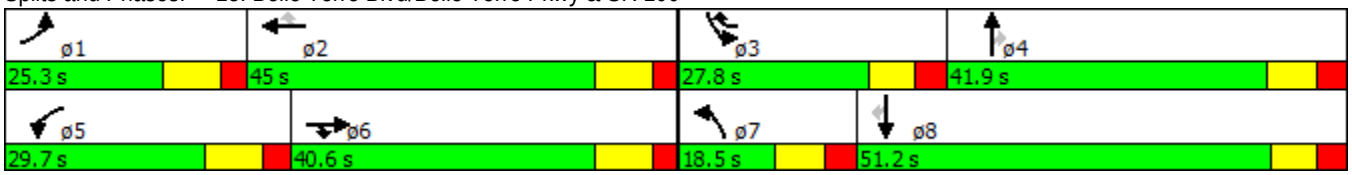

Intersection	
Int Delay, s/veh	0.7

Movement	EBL	EBR	NBL	NBT	SBT	SBR
Vol, veh/h	10	50	29	806	1298	10
Conflicting Peds, #/hr	0	0	0	0	0	0
Sign Control	Stop	Stop	Free	Free	Free	Free
RT Channelized	-	None	-	None	-	None
Storage Length	0	-	380	-	-	-
Veh in Median Storage, #	1	-	-	0	0	-
Grade, %	0	-	-	0	0	-
Peak Hour Factor	95	95	95	95	95	95
Heavy Vehicles, %	0	4	2	2	2	2
Mvmt Flow	11	53	31	848	1366	11

Major/Minor	Minor2		Major1		Major2	
Conflicting Flow All	1857	688	1377	0	-	0
Stage 1	1372	-	-	-	-	-
Stage 2	485	-	-	-	-	-
Critical Hdwy	6.8	6.98	4.14	-	-	-
Critical Hdwy Stg 1	5.8	-	-	-	-	-
Critical Hdwy Stg 2	5.8	-	-	-	-	-
Follow-up Hdwy	3.5	3.34	2.22	-	-	-
Pot Cap-1 Maneuver	67	384	494	-	-	-
Stage 1	204	-	-	-	-	-
Stage 2	591	-	-	-	-	-
Platoon blocked, %				-	-	-
Mov Cap-1 Maneuver	63	384	494	-	-	-
Mov Cap-2 Maneuver	157	-	-	-	-	-
Stage 1	204	-	-	-	-	-
Stage 2	554	-	-	-	-	-

Approach	EB	NB	SB
HCM Control Delay, s	19.6	0.4	0
HCM LOS	C		

Minor Lane/Major Mvmt	NBL	NBT	EBLn1	SBT	SBR
Capacity (veh/h)	494	-	309	-	-
HCM Lane V/C Ratio	0.062	-	0.204	-	-
HCM Control Delay (s)	12.8	-	19.6	-	-
HCM Lane LOS	B	-	C	-	-
HCM 95th %tile Q(veh)	0.2	-	0.8	-	-

Intersection	
Int Delay, s/veh	1.5

Movement	EBL	EBT	EBR	WBL	WBT	WBR	NBL	NBT	NBR	SBL	SBT	SBR
Vol, veh/h	23	4	6	35	4	17	8	739	69	40	1267	13
Conflicting Peds, #/hr	0	0	0	0	0	0	0	0	0	0	0	0
Sign Control	Stop	Stop	Stop	Stop	Stop	Stop	Free	Free	Free	Free	Free	Free
RT Channelized	-	-	None	-	-	None	-	-	None	-	-	None
Storage Length	-	-	-	300	-	-	350	-	250	400	-	-
Veh in Median Storage, #	-	1	-	-	1	-	-	0	-	-	0	-
Grade, %	-	0	-	-	0	-	-	0	-	-	0	-
Peak Hour Factor	95	95	95	95	95	95	95	95	95	95	95	95
Heavy Vehicles, %	7	0	0	4	0	38	2	2	2	2	2	2
Mvmt Flow	24	4	6	37	4	18	8	778	73	42	1334	14

Major/Minor	Minor2			Minor1			Major1			Major2		
Conflicting Flow All	1833	2220	674	1548	2227	389	1347	0	0	778	0	0
Stage 1	1425	1425	-	795	795	-	-	-	-	-	-	-
Stage 2	408	795	-	753	1432	-	-	-	-	-	-	-
Critical Hdwy	7.64	6.5	6.9	7.58	6.5	7.66	4.14	-	-	4.14	-	-
Critical Hdwy Stg 1	6.64	5.5	-	6.58	5.5	-	-	-	-	-	-	-
Critical Hdwy Stg 2	6.64	5.5	-	6.58	5.5	-	-	-	-	-	-	-
Follow-up Hdwy	3.57	4	3.3	3.54	4	3.68	2.22	-	-	2.22	-	-
Pot Cap-1 Maneuver	45	44	402	76	44	518	507	-	-	834	-	-
Stage 1	136	203	-	343	402	-	-	-	-	-	-	-
Stage 2	578	402	-	363	202	-	-	-	-	-	-	-
Platoon blocked, %								-	-		-	-
Mov Cap-1 Maneuver	40	41	402	69	41	518	507	-	-	834	-	-
Mov Cap-2 Maneuver	108	131	-	182	130	-	-	-	-	-	-	-
Stage 1	134	193	-	338	396	-	-	-	-	-	-	-
Stage 2	543	396	-	332	192	-	-	-	-	-	-	-

Approach	EB	WB	NB	SB
HCM Control Delay, s	43.3	24.8	0.1	0.3
HCM LOS	E	C		

Minor Lane/Major Mvmt	NBL	NBT	NBR	EBLn1	WBLn1	WBLn2	SBL	SBT	SBR
Capacity (veh/h)	507	-	-	128	182	330	834	-	-
HCM Lane V/C Ratio	0.017	-	-	0.271	0.202	0.067	0.05	-	-
HCM Control Delay (s)	12.2	-	-	43.3	29.7	16.7	9.5	-	-
HCM Lane LOS	B	-	-	E	D	C	A	-	-
HCM 95th %tile Q(veh)	0.1	-	-	1	0.7	0.2	0.2	-	-

Lane Group	EBL	EBT	EBR	WBL	WBT	WBR	NBL	NBT	NBR	SBL	SBT	SBR
Lane Configurations												
Volume (vph)	210	55	200	28	40	122	149	623	7	268	1092	152
Ideal Flow (vphpl)	1900	1900	1900	1900	1900	1900	1900	1900	1900	1900	1900	1900
Lane Width (ft)	12	12	12	12	12	12	12	12	12	12	12	12
Grade (%)		0%			0%			0%			0%	
Storage Length (ft)	0		150	285		0	325		450	450		275
Storage Lanes	1		1	1		1	1		1	1		1
Taper Length (ft)	50			75			50			50		
Satd. Flow (prot)	1752	1900	1599	1805	1900	1615	1770	3539	1583	1770	3539	1583
Flt Permitted	0.579			0.719			0.950			0.950		
Satd. Flow (perm)	1068	1900	1599	1366	1900	1615	1770	3539	1583	1770	3539	1583
Right Turn on Red			Yes			Yes			Yes			Yes
Satd. Flow (RTOR)			279			226			275			211
Link Speed (mph)		40			40			45			45	
Link Distance (ft)		664			1054			1578			2742	
Travel Time (s)		11.3			18.0			23.9			41.5	
Confl. Peds. (#/hr)												
Confl. Bikes (#/hr)												
Peak Hour Factor	0.95	0.95	0.95	0.95	0.95	0.95	0.95	0.95	0.95	0.95	0.95	0.95
Growth Factor	100%	100%	100%	100%	100%	100%	100%	100%	100%	100%	100%	100%
Heavy Vehicles (%)	3%	0%	1%	0%	0%	0%	2%	2%	2%	2%	2%	2%
Bus Blockages (#/hr)	0	0	0	0	0	0	0	0	0	0	0	0
Parking (#/hr)												
Mid-Block Traffic (%)		0%			0%			0%			0%	
Shared Lane Traffic (%)												
Lane Group Flow (vph)	221	58	211	29	42	128	157	656	7	282	1149	160
Turn Type	pm+pt	NA	Perm	pm+pt	NA	Perm	Prot	NA	Perm	Prot	NA	Perm
Protected Phases	3	8		7	4		1	6		5	2	
Permitted Phases	8		8	4		4			6			2
Detector Phase	3	8	8	7	4	4	1	6	6	5	2	2
Switch Phase												
Minimum Initial (s)	5.0	5.0	5.0	5.0	5.0	5.0	5.0	15.0	15.0	5.0	15.0	15.0
Minimum Split (s)	11.4	11.4	11.4	21.6	41.6	41.6	11.8	21.8	21.8	11.8	29.8	29.8
Total Split (s)	11.6	31.6	31.6	21.6	41.6	41.6	17.4	35.7	35.7	26.1	44.4	44.4
Total Split (%)	10.1%	27.5%	27.5%	18.8%	36.2%	36.2%	15.1%	31.0%	31.0%	22.7%	38.6%	38.6%
Yellow Time (s)	4.4	4.4	4.4	3.6	3.6	3.6	4.8	4.8	4.8	4.8	4.8	4.8
All-Red Time (s)	2.0	2.0	2.0	2.0	2.0	2.0	2.0	2.0	2.0	2.0	2.0	2.0
Lost Time Adjust (s)	0.0	0.0	0.0	0.0	0.0	0.0	0.0	0.0	0.0	0.0	0.0	0.0
Total Lost Time (s)	6.4	6.4	6.4	5.6	5.6	5.6	6.8	6.8	6.8	6.8	6.8	6.8
Lead/Lag	Lead	Lag	Lag	Lead	Lag	Lag	Lead	Lag	Lag	Lead	Lag	Lag
Lead-Lag Optimize?	Yes	Yes	Yes	Yes	Yes	Yes	Yes	Yes	Yes	Yes	Yes	Yes
Recall Mode	None	None	None	None	None	None	None	Min	Min	None	Min	Min
Act Effct Green (s)	16.4	14.5	14.5	15.4	8.7	8.7	10.6	28.9	28.9	18.8	37.1	37.1
Actuated g/C Ratio	0.19	0.17	0.17	0.18	0.10	0.10	0.12	0.33	0.33	0.22	0.42	0.42
v/c Ratio	0.92	0.18	0.42	0.11	0.22	0.35	0.73	0.56	0.01	0.74	0.76	0.20
Control Delay	76.0	36.4	4.4	26.8	38.6	2.6	59.2	26.8	0.0	46.0	26.0	1.7
Queue Delay	0.0	0.0	0.0	0.0	0.0	0.0	0.0	0.0	0.0	0.0	0.0	0.0
Total Delay	76.0	36.4	4.4	26.8	38.6	2.6	59.2	26.8	0.0	46.0	26.0	1.7
LOS	E	D	A	C	D	A	E	C	A	D	C	A

Lane Group	EBL	EBT	EBR	WBL	WBT	WBR	NBL	NBT	NBR	SBL	SBT	SBR
Approach Delay		40.5			13.7			32.8			27.1	
Approach LOS		D			B			C			C	

Intersection Summary	
Area Type:	Other
Cycle Length: 115	
Actuated Cycle Length: 87.3	
Natural Cycle: 115	
Control Type: Actuated-Uncoordinated	
Maximum v/c Ratio: 0.92	
Intersection Signal Delay: 29.9	Intersection LOS: C
Intersection Capacity Utilization 73.4%	ICU Level of Service D
Analysis Period (min) 15	

Splits and Phases: 18: Belle Terre Pkwy & Easthampton Blvd /Central Ave

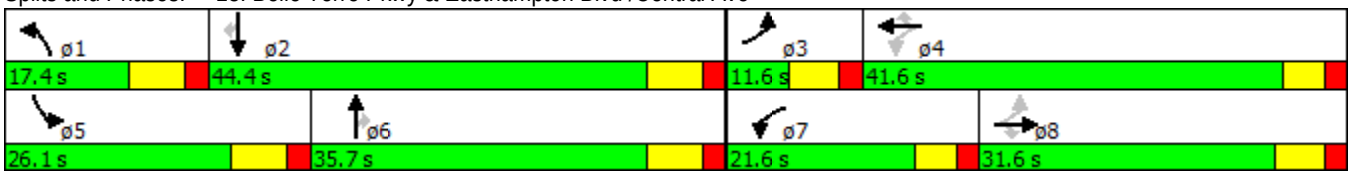

Lane Group	EBL	EBT	EBR	WBL	WBT	WBR	NBL	NBT	NBR	SBL	SBT	SBR
Lane Configurations												
Volume (vph)	27	115	193	206	226	296	169	681	105	405	1113	59
Ideal Flow (vphpl)	1900	1900	1900	1900	1900	1900	1900	1900	1900	1900	1900	1900
Lane Width (ft)	12	12	12	12	12	12	12	12	12	12	12	12
Grade (%)		0%			0%			0%			0%	
Storage Length (ft)	300		250	250		250	350		250	350		250
Storage Lanes	1		1	1		1	1		1	1		1
Taper Length (ft)	50			50			50			50		
Satd. Flow (prot)	1805	1827	1568	1805	1900	1599	1770	3539	1583	1770	3539	1583
Flt Permitted	0.537			0.679			0.175			0.177		
Satd. Flow (perm)	1020	1827	1568	1290	1900	1599	326	3539	1583	330	3539	1583
Right Turn on Red			Yes			Yes			Yes			Yes
Satd. Flow (RTOR)			203			312			192			118
Link Speed (mph)		55			55			45			45	
Link Distance (ft)		1429			1119			2742			1415	
Travel Time (s)		17.7			13.9			41.5			21.4	
Confl. Peds. (#/hr)												
Confl. Bikes (#/hr)												
Peak Hour Factor	0.95	0.95	0.95	0.95	0.95	0.95	0.95	0.95	0.95	0.95	0.95	0.95
Growth Factor	100%	100%	100%	100%	100%	100%	100%	100%	100%	100%	100%	100%
Heavy Vehicles (%)	0%	4%	3%	0%	0%	1%	2%	2%	2%	2%	2%	2%
Bus Blockages (#/hr)	0	0	0	0	0	0	0	0	0	0	0	0
Parking (#/hr)												
Mid-Block Traffic (%)		0%			0%			0%			0%	
Shared Lane Traffic (%)												
Lane Group Flow (vph)	28	121	203	217	238	312	178	717	111	426	1172	62
Turn Type	Perm	NA	Perm	Perm	NA	Perm	pm+pt	NA	Perm	pm+pt	NA	Perm
Protected Phases		4			8		5	2		1	6	
Permitted Phases	4		4	8		8	2		2	6		6
Detector Phase	4	4	4	8	8	8	5	2	2	1	6	6
Switch Phase												
Minimum Initial (s)	7.0	7.0	7.0	7.0	7.0	7.0	7.0	15.0	15.0	7.0	15.0	15.0
Minimum Split (s)	41.0	41.0	41.0	39.0	39.0	39.0	13.8	33.8	33.8	13.8	33.8	33.8
Total Split (s)	41.0	41.0	41.0	41.0	41.0	41.0	14.2	34.0	34.0	25.0	44.8	44.8
Total Split (%)	41.0%	41.0%	41.0%	41.0%	41.0%	41.0%	14.2%	34.0%	34.0%	25.0%	44.8%	44.8%
Yellow Time (s)	5.0	5.0	5.0	5.0	5.0	5.0	4.8	4.8	4.8	4.8	4.8	4.8
All-Red Time (s)	2.0	2.0	2.0	2.0	2.0	2.0	2.0	2.0	2.0	2.0	2.0	2.0
Lost Time Adjust (s)	0.0	0.0	0.0	0.0	0.0	0.0	0.0	0.0	0.0	0.0	0.0	0.0
Total Lost Time (s)	7.0	7.0	7.0	7.0	7.0	7.0	6.8	6.8	6.8	6.8	6.8	6.8
Lead/Lag							Lead	Lag	Lag	Lead	Lag	Lag
Lead-Lag Optimize?							Yes	Yes	Yes	Yes	Yes	Yes
Recall Mode	None	None	None	None	None	None	None	Min	Min	None	Min	Min
Act Effct Green (s)	20.4	20.4	20.4	20.4	20.4	20.4	30.3	22.8	22.8	48.3	33.8	33.8
Actuated g/C Ratio	0.25	0.25	0.25	0.25	0.25	0.25	0.37	0.28	0.28	0.58	0.41	0.41
v/c Ratio	0.11	0.27	0.38	0.68	0.51	0.50	0.71	0.74	0.19	0.83	0.81	0.09
Control Delay	25.3	26.8	5.9	40.2	31.0	6.0	33.5	33.1	0.8	32.7	28.0	0.5
Queue Delay	0.0	0.0	0.0	0.0	0.0	0.0	0.0	0.0	0.0	0.0	0.0	0.0
Total Delay	25.3	26.8	5.9	40.2	31.0	6.0	33.5	33.1	0.8	32.7	28.0	0.5
LOS	C	C	A	D	C	A	C	C	A	C	C	A

Lane Group	EBL	EBT	EBR	WBL	WBT	WBR	NBL	NBT	NBR	SBL	SBT	SBR
Approach Delay		14.6			23.4			29.6			28.2	
Approach LOS		B			C			C			C	

Intersection Summary	
Area Type:	Other
Cycle Length: 100	
Actuated Cycle Length: 82.8	
Natural Cycle: 100	
Control Type: Actuated-Uncoordinated	
Maximum v/c Ratio: 0.83	
Intersection Signal Delay: 26.4	Intersection LOS: C
Intersection Capacity Utilization 80.9%	ICU Level of Service D
Analysis Period (min) 15	

Splits and Phases: 19: Belle Terre Pkwy & Royal Palms Pkwy

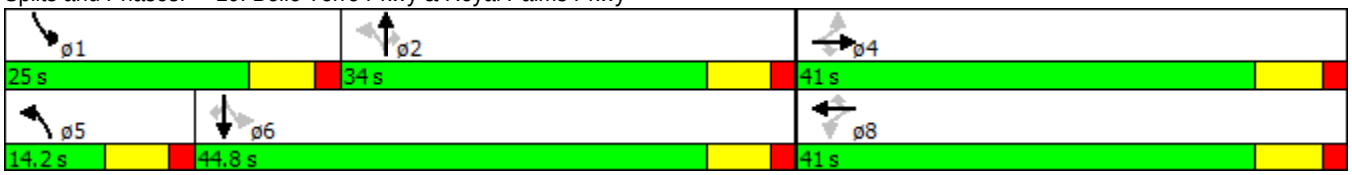

Intersection	
Int Delay, s/veh	1.5

Movement	WBL	WBR	NBT	NBR	SBL	SBT
Vol, veh/h	64	57	958	46	33	1513
Conflicting Peds, #/hr	0	0	0	0	0	0
Sign Control	Stop	Stop	Free	Free	Free	Free
RT Channelized	-	None	-	None	-	None
Storage Length	0	-	-	250	350	-
Veh in Median Storage, #	1	-	0	-	-	0
Grade, %	0	-	0	-	-	0
Peak Hour Factor	95	95	95	95	95	95
Heavy Vehicles, %	0	7	2	2	2	2
Mvmt Flow	67	60	1008	48	35	1593

Major/Minor	Minor1		Major1		Major2	
Conflicting Flow All	1874	504	0	0	1008	0
Stage 1	1008	-	-	-	-	-
Stage 2	866	-	-	-	-	-
Critical Hdwy	6.8	7.04	-	-	4.14	-
Critical Hdwy Stg 1	5.8	-	-	-	-	-
Critical Hdwy Stg 2	5.8	-	-	-	-	-
Follow-up Hdwy	3.5	3.37	-	-	2.22	-
Pot Cap-1 Maneuver	~ 65	500	-	-	683	-
Stage 1	318	-	-	-	-	-
Stage 2	377	-	-	-	-	-
Platoon blocked, %			-	-		-
Mov Cap-1 Maneuver	~ 62	500	-	-	683	-
Mov Cap-2 Maneuver	182	-	-	-	-	-
Stage 1	318	-	-	-	-	-
Stage 2	358	-	-	-	-	-

Approach	WB	NB	SB
HCM Control Delay, s	31.5	0	0.2
HCM LOS	D		

Minor Lane/Major Mvmt	NBT	NBR	WBLn1	SBL	SBT
Capacity (veh/h)	-	-	260	683	-
HCM Lane V/C Ratio	-	-	0.49	0.051	-
HCM Control Delay (s)	-	-	31.5	10.6	-
HCM Lane LOS	-	-	D	B	-
HCM 95th %tile Q(veh)	-	-	2.5	0.2	-

Notes

~: Volume exceeds capacity $: Delay exceeds 300s +: Computation Not Defined *: All major volume in platoon

Lane Group	EBL	EBR	NBL	NBT	SBT	SBR
Lane Configurations						
Volume (vph)	166	378	208	807	1168	123
Ideal Flow (vphpl)	1900	1900	1900	1900	1900	1900
Lane Width (ft)	12	12	12	12	12	12
Grade (%)	0%			0%	0%	
Storage Length (ft)	250	0	350			200
Storage Lanes	1	1	1			1
Taper Length (ft)	50		50			
Satd. Flow (prot)	1719	1599	1770	3539	3539	1583
Flt Permitted	0.950		0.113			
Satd. Flow (perm)	1719	1599	210	3539	3539	1583
Right Turn on Red		Yes				Yes
Satd. Flow (RTOR)		365				105
Link Speed (mph)	45			45	45	
Link Distance (ft)	1554			1428	1580	
Travel Time (s)	23.5			21.6	23.9	
Confl. Peds. (#/hr)						
Confl. Bikes (#/hr)						
Peak Hour Factor	0.95	0.95	0.95	0.95	0.95	0.95
Growth Factor	100%	100%	100%	100%	100%	100%
Heavy Vehicles (%)	5%	1%	2%	2%	2%	2%
Bus Blockages (#/hr)	0	0	0	0	0	0
Parking (#/hr)						
Mid-Block Traffic (%)	0%			0%	0%	
Shared Lane Traffic (%)						
Lane Group Flow (vph)	175	398	219	849	1229	129
Turn Type	Prot	Prot	pm+pt	NA	NA	Perm
Protected Phases	8	8	1	6	2	
Permitted Phases			6			2
Detector Phase	8	8	1	6	2	2
Switch Phase						
Minimum Initial (s)	6.0	6.0	6.0	15.0	15.0	15.0
Minimum Split (s)	33.8	33.8	13.0	22.0	30.0	30.0
Total Split (s)	33.8	33.8	21.0	56.2	35.2	35.2
Total Split (%)	37.6%	37.6%	23.3%	62.4%	39.1%	39.1%
Yellow Time (s)	4.8	4.8	4.8	4.8	4.8	4.8
All-Red Time (s)	2.0	2.0	2.2	2.2	2.2	2.2
Lost Time Adjust (s)	0.0	0.0	0.0	0.0	0.0	0.0
Total Lost Time (s)	6.8	6.8	7.0	7.0	7.0	7.0
Lead/Lag			Lead		Lag	Lag
Lead-Lag Optimize?			Yes		Yes	Yes
Recall Mode	None	None	None	Min	Min	Min
Act Effct Green (s)	12.8	12.8	45.4	45.4	28.4	28.4
Actuated g/C Ratio	0.18	0.18	0.63	0.63	0.39	0.39
v/c Ratio	0.57	0.68	0.63	0.38	0.88	0.19
Control Delay	35.2	11.1	19.8	7.6	31.2	6.4
Queue Delay	0.0	0.0	0.0	0.0	0.0	0.0
Total Delay	35.2	11.1	19.8	7.6	31.2	6.4
LOS	D	B	B	A	C	A

Lane Group	EBL	EBR	NBL	NBT	SBT	SBR
Approach Delay	18.5			10.1	28.8	
Approach LOS	B			B	C	

Intersection Summary	
Area Type:	Other
Cycle Length: 90	
Actuated Cycle Length: 72.1	
Natural Cycle: 90	
Control Type: Actuated-Uncoordinated	
Maximum v/c Ratio: 0.88	
Intersection Signal Delay: 20.2	Intersection LOS: C
Intersection Capacity Utilization 70.3%	ICU Level of Service C
Analysis Period (min) 15	

Splits and Phases: 21: Belle Terre Pkwy & Rymfire Dr

Intersection	
Int Delay, s/veh	2.1

Movement	WBL	WBR	NBT	NBR	SBL	SBT
Vol, veh/h	53	106	939	34	70	1238
Conflicting Peds, #/hr	0	0	0	0	0	0
Sign Control	Stop	Stop	Free	Free	Free	Free
RT Channelized	-	None	-	None	-	None
Storage Length	0	-	-	250	350	-
Veh in Median Storage, #	1	-	0	-	-	0
Grade, %	0	-	0	-	-	0
Peak Hour Factor	95	95	95	95	95	95
Heavy Vehicles, %	3	3	2	2	2	2
Mvmt Flow	56	112	988	36	74	1303

Major/Minor	Minor1		Major1		Major2	
Conflicting Flow All	1787	494	0	0	988	0
Stage 1	988	-	-	-	-	-
Stage 2	799	-	-	-	-	-
Critical Hdwy	6.86	6.96	-	-	4.14	-
Critical Hdwy Stg 1	5.86	-	-	-	-	-
Critical Hdwy Stg 2	5.86	-	-	-	-	-
Follow-up Hdwy	3.53	3.33	-	-	2.22	-
Pot Cap-1 Maneuver	72	518	-	-	695	-
Stage 1	319	-	-	-	-	-
Stage 2	401	-	-	-	-	-
Platoon blocked, %			-	-		-
Mov Cap-1 Maneuver	64	518	-	-	695	-
Mov Cap-2 Maneuver	183	-	-	-	-	-
Stage 1	319	-	-	-	-	-
Stage 2	358	-	-	-	-	-

Approach	WB	NB	SB
HCM Control Delay, s	27.7	0	0.6
HCM LOS	D		

Minor Lane/Major Mvmt	NBT	NBR	WBLn1	SBL	SBT
Capacity (veh/h)	-	-	322	695	-
HCM Lane V/C Ratio	-	-	0.52	0.106	-
HCM Control Delay (s)	-	-	27.7	10.8	-
HCM Lane LOS	-	-	D	B	-
HCM 95th %tile Q(veh)	-	-	2.8	0.4	-

Intersection	
Int Delay, s/veh	2.9

Movement	WBL	WBR	NBT	NBR	SBL	SBT
Vol, veh/h	0	311	937	108	81	1308
Conflicting Peds, #/hr	0	0	0	0	0	0
Sign Control	Stop	Stop	Free	Free	Free	Free
RT Channelized	-	None	-	None	-	None
Storage Length	-	0	-	250	350	-
Veh in Median Storage, #	1	-	0	-	-	0
Grade, %	0	-	0	-	-	0
Peak Hour Factor	95	95	95	95	95	95
Heavy Vehicles, %	1	3	2	2	2	2
Mvmt Flow	0	327	986	114	85	1377

Major/Minor	Minor1		Major1		Major2	
Conflicting Flow All	1845	493	0	0	986	0
Stage 1	986	-	-	-	-	-
Stage 2	859	-	-	-	-	-
Critical Hdwy	6.82	6.96	-	-	4.14	-
Critical Hdwy Stg 1	5.82	-	-	-	-	-
Critical Hdwy Stg 2	5.82	-	-	-	-	-
Follow-up Hdwy	3.51	3.33	-	-	2.22	-
Pot Cap-1 Maneuver	67	519	-	-	696	-
Stage 1	324	-	-	-	-	-
Stage 2	378	-	-	-	-	-
Platoon blocked, %			-	-		-
Mov Cap-1 Maneuver	59	519	-	-	696	-
Mov Cap-2 Maneuver	177	-	-	-	-	-
Stage 1	324	-	-	-	-	-
Stage 2	332	-	-	-	-	-

Approach	WB	NB	SB
HCM Control Delay, s	23	0	0.6
HCM LOS	C		

Minor Lane/Major Mvmt	NBT	NBR	WBLn1	SBL	SBT
Capacity (veh/h)	-	-	519	696	-
HCM Lane V/C Ratio	-	-	0.631	0.123	-
HCM Control Delay (s)	-	-	23	10.9	-
HCM Lane LOS	-	-	C	B	-
HCM 95th %tile Q(veh)	-	-	4.3	0.4	-

Lane Group	EBL	EBT	EBR	WBL	WBT	WBR	NBU	NBL	NBT	NBR	SBL	SBT
Lane Configurations												
Volume (vph)	174	17	191	179	90	139	148	146	891	63	102	871
Ideal Flow (vphpl)	1900	1900	1900	1900	1900	1900	1900	1900	1900	1900	1900	1900
Lane Width (ft)	12	12	12	12	12	12	12	12	12	12	12	12
Grade (%)		0%			0%				0%			0%
Storage Length (ft)	325		0	225		0		350		325	250	
Storage Lanes	1		0	1		0		1		1	1	
Taper Length (ft)	50			50				50			50	
Satd. Flow (prot)	1752	1638	0	1787	1674	0	0	1770	3539	1583	1770	3539
Flt Permitted	0.283			0.621				0.950			0.950	
Satd. Flow (perm)	522	1638	0	1168	1674	0	0	1770	3539	1583	1770	3539
Right Turn on Red			No			Yes				Yes		
Satd. Flow (RTOR)					67					185		
Link Speed (mph)		55			45				45			45
Link Distance (ft)		1756			1701				1132			1277
Travel Time (s)		21.8			25.8				17.2			19.3
Confl. Peds. (#/hr)												
Confl. Bikes (#/hr)												
Peak Hour Factor	0.95	0.95	0.95	0.95	0.95	0.95	0.95	0.95	0.95	0.95	0.95	0.95
Growth Factor	100%	100%	100%	100%	100%	100%	100%	100%	100%	100%	100%	100%
Heavy Vehicles (%)	3%	0%	0%	1%	5%	2%	2%	2%	2%	2%	2%	2%
Bus Blockages (#/hr)	0	0	0	0	0	0	0	0	0	0	0	0
Parking (#/hr)												
Mid-Block Traffic (%)		0%			0%				0%			0%
Shared Lane Traffic (%)												
Lane Group Flow (vph)	183	219	0	188	241	0	0	310	938	66	107	917
Turn Type	pm+pt	NA		pm+pt	NA		Prot	Prot	NA	Perm	Prot	NA
Protected Phases	3	8		7	4		5	5	2		1	6
Permitted Phases	8			4						2		
Detector Phase	3	8		7	4		5	5	2	2	1	6
Switch Phase												
Minimum Initial (s)	4.0	5.0		4.0	5.0		9.0	9.0	17.0	17.0	9.0	17.0
Minimum Split (s)	8.0	33.0		8.0	11.0		15.8	15.8	33.8	33.8	15.8	33.8
Total Split (s)	13.0	33.0		8.0	28.0		24.0	24.0	47.1	47.1	16.9	40.0
Total Split (%)	12.4%	31.4%		7.6%	26.7%		22.9%	22.9%	44.9%	44.9%	16.1%	38.1%
Yellow Time (s)	3.5	4.0		3.5	4.0		4.8	4.8	4.8	4.8	4.8	4.8
All-Red Time (s)	0.5	2.0		0.5	2.0		2.0	2.0	2.0	2.0	2.0	2.0
Lost Time Adjust (s)	0.0	0.0		0.0	0.0			0.0	0.0	0.0	0.0	0.0
Total Lost Time (s)	4.0	6.0		4.0	6.0			6.8	6.8	6.8	6.8	6.8
Lead/Lag	Lead	Lag		Lead	Lag		Lead	Lead	Lag	Lag	Lead	Lag
Lead-Lag Optimize?	Yes	Yes		Yes	Yes		Yes	Yes	Yes	Yes	Yes	Yes
Recall Mode	None	None		None	None		None	None	Min	Min	None	Min
Act Effct Green (s)	30.2	20.1		21.3	15.3			17.4	37.5	37.5	9.8	29.9
Actuated g/C Ratio	0.32	0.21		0.22	0.16			0.18	0.39	0.39	0.10	0.31
v/c Ratio	0.65	0.63		0.66	0.75			0.96	0.67	0.09	0.59	0.83
Control Delay	37.5	43.4		41.7	42.2			83.5	27.3	0.2	57.5	38.0
Queue Delay	0.0	0.0		0.0	0.0			0.0	0.0	0.0	0.0	0.0
Total Delay	37.5	43.4		41.7	42.2			83.5	27.3	0.2	57.5	38.0
LOS	D	D		D	D			F	C	A	E	D

Lane Group	SBR
Lane Configurations	
Volume (vph)	152
Ideal Flow (vphpl)	1900
Lane Width (ft)	12
Grade (%)	
Storage Length (ft)	325
Storage Lanes	1
Taper Length (ft)	
Satd. Flow (prot)	1583
Flt Permitted	
Satd. Flow (perm)	1583
Right Turn on Red	Yes
Satd. Flow (RTOR)	256
Link Speed (mph)	
Link Distance (ft)	
Travel Time (s)	
Confl. Peds. (#/hr)	
Confl. Bikes (#/hr)	
Peak Hour Factor	0.95
Growth Factor	100%
Heavy Vehicles (%)	2%
Bus Blockages (#/hr)	0
Parking (#/hr)	
Mid-Block Traffic (%)	
Shared Lane Traffic (%)	
Lane Group Flow (vph)	160
Turn Type	Perm
Protected Phases	
Permitted Phases	6
Detector Phase	6
Switch Phase	
Minimum Initial (s)	17.0
Minimum Split (s)	33.8
Total Split (s)	40.0
Total Split (%)	38.1%
Yellow Time (s)	4.8
All-Red Time (s)	2.0
Lost Time Adjust (s)	0.0
Total Lost Time (s)	6.8
Lead/Lag	Lag
Lead-Lag Optimize?	Yes
Recall Mode	Min
Act Effct Green (s)	29.9
Actuated g/C Ratio	0.31
v/c Ratio	0.24
Control Delay	0.8
Queue Delay	0.0
Total Delay	0.8
LOS	A

Lane Group	EBL	EBT	EBR	WBL	WBT	WBR	NBU	NBL	NBT	NBR	SBL	SBT
Approach Delay		40.8			42.0				39.2			34.8
Approach LOS		D			D				D			C

Intersection Summary	
Area Type:	Other
Cycle Length: 105	
Actuated Cycle Length: 95.3	
Natural Cycle: 95	
Control Type: Actuated-Uncoordinated	
Maximum v/c Ratio: 0.96	
Intersection Signal Delay: 38.2	Intersection LOS: D
Intersection Capacity Utilization 82.9%	ICU Level of Service E
Analysis Period (min) 15	

Splits and Phases: 24: Belle Terre Pkwy & Whiteview Pkwy

Intersection	
Int Delay, s/veh	2.6

Movement	EBL	EBR	NBL	NBT	SBT	SBR
Vol, veh/h	77	73	52	1152	1052	49
Conflicting Peds, #/hr	0	0	0	0	0	0
Sign Control	Stop	Stop	Free	Free	Free	Free
RT Channelized	-	None	-	None	-	None
Storage Length	0	-	175	-	-	250
Veh in Median Storage, #	1	-	-	0	0	-
Grade, %	0	-	-	0	0	-
Peak Hour Factor	95	95	95	95	95	95
Heavy Vehicles, %	2	0	2	2	2	2
Mvmt Flow	81	77	55	1213	1107	52

Major/Minor	Minor2		Major1		Major2	
Conflicting Flow All	1823	554	1107	0	-	0
Stage 1	1107	-	-	-	-	-
Stage 2	716	-	-	-	-	-
Critical Hdwy	6.84	6.9	4.14	-	-	-
Critical Hdwy Stg 1	5.84	-	-	-	-	-
Critical Hdwy Stg 2	5.84	-	-	-	-	-
Follow-up Hdwy	3.52	3.3	2.22	-	-	-
Pot Cap-1 Maneuver	~ 69	481	626	-	-	-
Stage 1	278	-	-	-	-	-
Stage 2	445	-	-	-	-	-
Platoon blocked, %				-	-	-
Mov Cap-1 Maneuver	~ 63	481	626	-	-	-
Mov Cap-2 Maneuver	178	-	-	-	-	-
Stage 1	278	-	-	-	-	-
Stage 2	406	-	-	-	-	-

Approach	EB	NB	SB
HCM Control Delay, s	39	0.5	0
HCM LOS	E		

Minor Lane/Major Mvmt	NBL	NBT	EBLn1	SBT	SBR
Capacity (veh/h)	626	-	257	-	-
HCM Lane V/C Ratio	0.087	-	0.614	-	-
HCM Control Delay (s)	11.3	-	39	-	-
HCM Lane LOS	B	-	E	-	-
HCM 95th %tile Q(veh)	0.3	-	3.7	-	-

Notes

~: Volume exceeds capacity $: Delay exceeds 300s +: Computation Not Defined *: All major volume in platoon

Intersection	
Int Delay, s/veh	5.3

Movement	WBL	WBR	NBT	NBR	SBL	SBT
Vol, veh/h	54	183	1187	42	66	1047
Conflicting Peds, #/hr	0	0	0	0	0	0
Sign Control	Stop	Stop	Free	Free	Free	Free
RT Channelized	-	None	-	None	-	None
Storage Length	0	-	-	250	175	-
Veh in Median Storage, #	1	-	0	-	-	0
Grade, %	0	-	0	-	-	0
Peak Hour Factor	95	95	95	95	95	95
Heavy Vehicles, %	2	4	2	2	2	2
Mvmt Flow	57	193	1249	44	69	1102

Major/Minor	Minor1		Major1		Major2	
Conflicting Flow All	1939	625	0	0	1249	0
Stage 1	1249	-	-	-	-	-
Stage 2	690	-	-	-	-	-
Critical Hdwy	6.84	6.98	-	-	4.14	-
Critical Hdwy Stg 1	5.84	-	-	-	-	-
Critical Hdwy Stg 2	5.84	-	-	-	-	-
Follow-up Hdwy	3.52	3.34	-	-	2.22	-
Pot Cap-1 Maneuver	57	423	-	-	553	-
Stage 1	234	-	-	-	-	-
Stage 2	459	-	-	-	-	-
Platoon blocked, %			-	-		-
Mov Cap-1 Maneuver	~ 50	423	-	-	553	-
Mov Cap-2 Maneuver	156	-	-	-	-	-
Stage 1	234	-	-	-	-	-
Stage 2	402	-	-	-	-	-

Approach	WB	NB	SB
HCM Control Delay, s	54	0	0.7
HCM LOS	F		

Minor Lane/Major Mvmt	NBT	NBR	WBLn1	SBL	SBT
Capacity (veh/h)	-	-	304	553	-
HCM Lane V/C Ratio	-	-	0.821	0.126	-
HCM Control Delay (s)	-	-	54	12.4	-
HCM Lane LOS	-	-	F	B	-
HCM 95th %tile Q(veh)	-	-	6.8	0.4	-

Notes

~: Volume exceeds capacity $: Delay exceeds 300s +: Computation Not Defined *: All major volume in platoon

Lane Group	WBL	WBR	NBT	NBR	SBL	SBT
Lane Configurations						
Volume (vph)	33	29	1335	35	200	1080
Ideal Flow (vphpl)	1900	1900	1900	1900	1900	1900
Lane Width (ft)	12	12	12	12	12	12
Grade (%)	0%		0%			0%
Storage Length (ft)	0	0		390	500	
Storage Lanes	1	1		1	1	
Taper Length (ft)	25				50	
Satd. Flow (prot)	1188	1468	3539	1583	1770	3539
Flt Permitted	0.950				0.107	
Satd. Flow (perm)	1188	1468	3539	1583	199	3539
Right Turn on Red		Yes		Yes		
Satd. Flow (RTOR)		31		37		
Link Speed (mph)	30		45			45
Link Distance (ft)	362		2373			662
Travel Time (s)	8.2		36.0			10.0
Confl. Peds. (#/hr)						
Confl. Bikes (#/hr)						
Peak Hour Factor	0.95	0.95	0.95	0.95	0.95	0.95
Growth Factor	100%	100%	100%	100%	100%	100%
Heavy Vehicles (%)	52%	10%	2%	2%	2%	2%
Bus Blockages (#/hr)	0	0	0	0	0	0
Parking (#/hr)						
Mid-Block Traffic (%)	0%		0%			0%
Shared Lane Traffic (%)						
Lane Group Flow (vph)	35	31	1405	37	211	1137
Turn Type	Prot	Prot	NA	Perm	pm+pt	NA
Protected Phases	4	4	6		5	2
Permitted Phases				6	2	
Detector Phase	4	4	6	6	5	2
Switch Phase						
Minimum Initial (s)	12.0	12.0	15.0	15.0	4.0	15.0
Minimum Split (s)	47.0	47.0	35.0	35.0	9.0	20.0
Total Split (s)	47.0	47.0	39.0	39.0	9.0	48.0
Total Split (%)	49.5%	49.5%	41.1%	41.1%	9.5%	50.5%
Yellow Time (s)	4.0	4.0	4.0	4.0	4.0	4.0
All-Red Time (s)	1.0	1.0	1.0	1.0	1.0	1.0
Lost Time Adjust (s)	0.0	0.0	0.0	0.0	0.0	0.0
Total Lost Time (s)	5.0	5.0	5.0	5.0	5.0	5.0
Lead/Lag			Lag	Lag	Lead	
Lead-Lag Optimize?			Yes	Yes	Yes	
Recall Mode	None	None	Min	Min	None	Min
Act Effct Green (s)	12.2	12.2	35.8	35.8	44.9	47.3
Actuated g/C Ratio	0.21	0.21	0.60	0.60	0.76	0.80
v/c Ratio	0.14	0.10	0.66	0.04	0.82	0.40
Control Delay	23.8	10.2	11.7	3.2	38.2	4.5
Queue Delay	0.0	0.0	0.0	0.0	0.0	0.0
Total Delay	23.8	10.2	11.7	3.2	38.2	4.5
LOS	C	B	B	A	D	A

Lane Group	WBL	WBR	NBT	NBR	SBL	SBT
Approach Delay	17.4		11.4			9.8
Approach LOS	B		B			A

Intersection Summary	
Area Type: Other	
Cycle Length: 95	
Actuated Cycle Length: 59.3	
Natural Cycle: 95	
Control Type: Actuated-Uncoordinated	
Maximum v/c Ratio: 0.82	
Intersection Signal Delay: 10.8	Intersection LOS: B
Intersection Capacity Utilization 70.5%	ICU Level of Service C
Analysis Period (min) 15	

Splits and Phases: 27: Belle Terre Pkwy & School Entrance

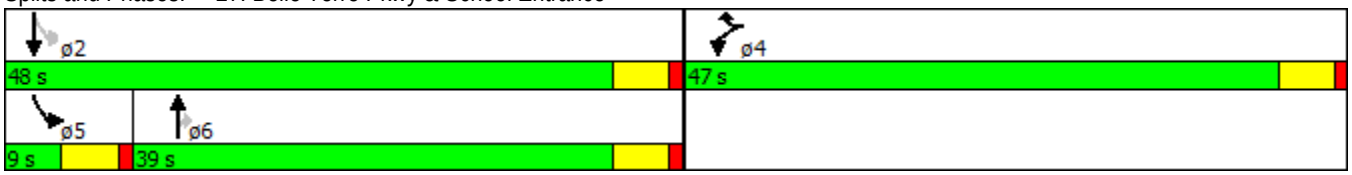

Lane Group	WBL	WBR	NBT	NBR	SBL	SBT	ø4
Lane Configurations							
Volume (vph)	315	259	1259	105	90	965	
Ideal Flow (vphpl)	1900	1900	1900	1900	1900	1900	
Lane Width (ft)	12	12	12	12	12	12	
Grade (%)	0%		0%			0%	
Storage Length (ft)	275	0		0	175		
Storage Lanes	1	1		0	1		
Taper Length (ft)	25				50		
Satd. Flow (prot)	1752	1615	3497	0	1770	3539	
Flt Permitted	0.950				0.100		
Satd. Flow (perm)	1752	1615	3497	0	186	3539	
Right Turn on Red		Yes		Yes			
Satd. Flow (RTOR)		273	7				
Link Speed (mph)	30		45			45	
Link Distance (ft)	890		234			3685	
Travel Time (s)	20.2		3.5			55.8	
Confl. Peds. (#/hr)							
Confl. Bikes (#/hr)							
Peak Hour Factor	0.95	0.95	0.95	0.95	0.95	0.95	
Growth Factor	100%	100%	100%	100%	100%	100%	
Heavy Vehicles (%)	3%	0%	2%	2%	2%	2%	
Bus Blockages (#/hr)	0	0	0	0	0	0	
Parking (#/hr)							
Mid-Block Traffic (%)	0%		0%			0%	
Shared Lane Traffic (%)							
Lane Group Flow (vph)	332	273	1436	0	95	1016	
Turn Type	Prot	Prot	NA		pm+pt	NA	
Protected Phases	3	3	6		5	2	4
Permitted Phases					2		
Detector Phase	3	3	6		5	2	
Switch Phase							
Minimum Initial (s)	4.0	4.0	10.0		4.0	10.0	1.0
Minimum Split (s)	9.0	9.0	47.0		8.0	15.0	47.0
Total Split (s)	22.0	22.0	53.0		13.0	66.0	47.0
Total Split (%)	16.3%	16.3%	39.3%		9.6%	48.9%	35%
Yellow Time (s)	4.0	4.0	4.0		3.0	4.0	4.0
All-Red Time (s)	1.0	1.0	1.0		1.0	1.0	1.0
Lost Time Adjust (s)	0.0	0.0	0.0		0.0	0.0	
Total Lost Time (s)	5.0	5.0	5.0		4.0	5.0	
Lead/Lag	Lead	Lead	Lag		Lead		Lag
Lead-Lag Optimize?	Yes	Yes	Yes		Yes		Yes
Recall Mode	None	None	Max		None	Max	None
Act Effct Green (s)	17.0	17.0	51.9		62.0	61.0	
Actuated g/C Ratio	0.19	0.19	0.59		0.70	0.69	
v/c Ratio	0.98	0.51	0.70		0.37	0.41	
Control Delay	82.4	7.9	15.5		8.2	6.4	
Queue Delay	0.0	0.0	0.0		0.0	0.0	
Total Delay	82.4	7.9	15.5		8.2	6.4	
LOS	F	A	B		A	A	

Lane Group	WBL	WBR	NBT	NBR	SBL	SBT	ø4
Approach Delay	48.8		15.5			6.6	
Approach LOS	D		B			A	

Intersection Summary	
Area Type:	Other
Cycle Length: 135	
Actuated Cycle Length: 88	
Natural Cycle: 145	
Control Type: Semi Act-Uncoord	
Maximum v/c Ratio: 0.98	
Intersection Signal Delay: 18.8	Intersection LOS: B
Intersection Capacity Utilization 72.2%	ICU Level of Service C
Analysis Period (min) 15	

Splits and Phases: 28: Belle Terre Pkwy & Parkview Dr (S)

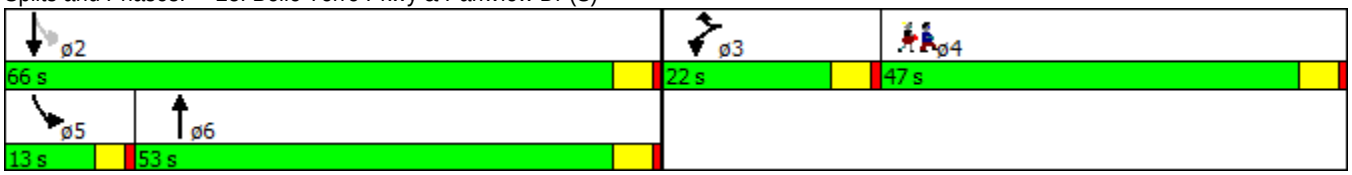

Intersection	
Int Delay, s/veh	4.6

Movement	SEL	SET	NWT	NWR	SWL	SWR
Vol, veh/h	98	1020	1493	25	35	145
Conflicting Peds, #/hr	0	0	0	0	0	0
Sign Control	Free	Free	Free	Free	Stop	Stop
RT Channelized	-	None	-	None	-	None
Storage Length	450	-	-	425	0	-
Veh in Median Storage, #	-	0	0	-	1	-
Grade, %	-	0	0	-	0	-
Peak Hour Factor	95	95	95	95	95	95
Heavy Vehicles, %	5	3	2	2	2	2
Mvmt Flow	103	1074	1572	26	37	153

Major/Minor	Major1		Major2		Minor2	
Conflicting Flow All	1572	0	-	0	2315	786
Stage 1	-	-	-	-	1572	-
Stage 2	-	-	-	-	743	-
Critical Hdwy	4.2	-	-	-	6.84	6.94
Critical Hdwy Stg 1	-	-	-	-	5.84	-
Critical Hdwy Stg 2	-	-	-	-	5.84	-
Follow-up Hdwy	2.25	-	-	-	3.52	3.32
Pot Cap-1 Maneuver	401	-	-	-	~ 32	335
Stage 1	-	-	-	-	156	-
Stage 2	-	-	-	-	431	-
Platoon blocked, %		-	-	-		
Mov Cap-1 Maneuver	401	-	-	-	~ 24	335
Mov Cap-2 Maneuver	-	-	-	-	105	-
Stage 1	-	-	-	-	156	-
Stage 2	-	-	-	-	320	-

Approach	SE	NW	SW
HCM Control Delay, s	1.5	0	63.1
HCM LOS			F

Minor Lane/Major Mvmt	NWT	NWR	SEL	SETSWLn1	
Capacity (veh/h)	-	-	401	-	235
HCM Lane V/C Ratio	-	-	0.257	-	0.806
HCM Control Delay (s)	-	-	17.1	-	63.1
HCM Lane LOS	-	-	C	-	F
HCM 95th %tile Q(veh)	-	-	1	-	6.1

Notes

~: Volume exceeds capacity $: Delay exceeds 300s +: Computation Not Defined *: All major volume in platoon

Lane Group	SET	SER	NWL	NWT	NEL	NER
Lane Configurations						
Volume (vph)	963	215	133	1505	530	155
Ideal Flow (vphpl)	1900	1900	1900	1900	1900	1900
Lane Width (ft)	12	12	12	12	12	12
Grade (%)	0%			0%	0%	
Storage Length (ft)		325	175		225	225
Storage Lanes		1	1		1	1
Taper Length (ft)			100		100	
Satd. Flow (prot)	3505	1583	1770	3539	3433	1583
Flt Permitted			0.143		0.950	
Satd. Flow (perm)	3505	1583	266	3539	3433	1583
Right Turn on Red		Yes				Yes
Satd. Flow (RTOR)		226				163
Link Speed (mph)	45			45	45	
Link Distance (ft)	1316			361	1297	
Travel Time (s)	19.9			5.5	19.7	
Confl. Peds. (#/hr)						
Confl. Bikes (#/hr)						
Peak Hour Factor	0.95	0.95	0.95	0.95	0.95	0.95
Growth Factor	100%	100%	100%	100%	100%	100%
Heavy Vehicles (%)	3%	2%	2%	2%	2%	2%
Bus Blockages (#/hr)	0	0	0	0	0	0
Parking (#/hr)						
Mid-Block Traffic (%)	0%			0%	0%	
Shared Lane Traffic (%)						
Lane Group Flow (vph)	1014	226	140	1584	558	163
Turn Type	NA	Perm	pm+pt	NA	Prot	Prot
Protected Phases	6		5	2	4	4
Permitted Phases		6	2			
Detector Phase	6	6	5	2	4	4
Switch Phase						
Minimum Initial (s)	20.0	20.0	4.0	20.0	6.0	6.0
Minimum Split (s)	26.8	26.8	11.0	27.0	31.8	31.8
Total Split (s)	46.2	46.2	12.0	58.2	31.8	31.8
Total Split (%)	51.3%	51.3%	13.3%	64.7%	35.3%	35.3%
Yellow Time (s)	4.8	4.8	4.8	4.8	4.8	4.8
All-Red Time (s)	2.0	2.0	2.2	2.2	2.0	2.0
Lost Time Adjust (s)	0.0	0.0	0.0	0.0	0.0	0.0
Total Lost Time (s)	6.8	6.8	7.0	7.0	6.8	6.8
Lead/Lag	Lag	Lag	Lead			
Lead-Lag Optimize?	Yes	Yes	Yes			
Recall Mode	Min	Min	None	Min	None	None
Act Effct Green (s)	30.5	30.5	42.6	42.6	17.9	17.9
Actuated g/C Ratio	0.41	0.41	0.57	0.57	0.24	0.24
v/c Ratio	0.71	0.29	0.55	0.78	0.68	0.32
Control Delay	21.7	3.3	17.1	16.3	31.2	6.5
Queue Delay	0.0	0.0	0.0	0.0	0.0	0.0
Total Delay	21.7	3.3	17.1	16.3	31.2	6.5
LOS	C	A	B	B	C	A

Lane Group	SET	SER	NWL	NWT	NEL	NER
Approach Delay	18.3			16.4	25.6	
Approach LOS	B			B	C	

Intersection Summary	
Area Type:	Other
Cycle Length: 90	
Actuated Cycle Length: 74.7	
Natural Cycle: 75	
Control Type: Actuated-Uncoordinated	
Maximum v/c Ratio: 0.78	
Intersection Signal Delay: 18.8	Intersection LOS: B
Intersection Capacity Utilization 68.2%	ICU Level of Service C
Analysis Period (min) 15	

Splits and Phases: 30: Pine Lakes Pkwy & Belle Terre Pkwy

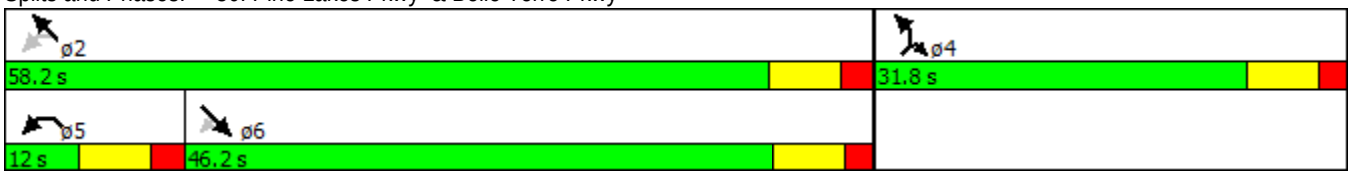

Lane Group	WBL	WBR	NBT	NBR	SBL	SBT
Lane Configurations						
Volume (vph)	217	45	1097	330	67	600
Ideal Flow (vphpl)	1900	1900	1900	1900	1900	1900
Lane Width (ft)	12	12	12	12	12	12
Grade (%)	0%		0%			0%
Storage Length (ft)	0	400		200	450	
Storage Lanes	1	1		1	1	
Taper Length (ft)	25				50	
Satd. Flow (prot)	1770	1583	3539	1615	1805	3539
Flt Permitted	0.950				0.950	
Satd. Flow (perm)	1770	1583	3539	1615	1805	3539
Right Turn on Red		Yes		Yes		
Satd. Flow (RTOR)		47		347		
Link Speed (mph)	50		60			60
Link Distance (ft)	1054		1255			1357
Travel Time (s)	14.4		14.3			15.4
Confl. Peds. (#/hr)						
Confl. Bikes (#/hr)						
Peak Hour Factor	0.95	0.95	0.95	0.95	0.95	0.95
Growth Factor	100%	100%	100%	100%	100%	100%
Heavy Vehicles (%)	2%	2%	2%	0%	0%	2%
Bus Blockages (#/hr)	0	0	0	0	0	0
Parking (#/hr)						
Mid-Block Traffic (%)	0%		0%			0%
Shared Lane Traffic (%)						
Lane Group Flow (vph)	228	47	1155	347	71	632
Turn Type	Prot	Prot	NA	Prot	Prot	NA
Protected Phases	4	4	6	6	5	2
Permitted Phases						
Detector Phase	4	4	6	6	5	2
Switch Phase						
Minimum Initial (s)	8.0	8.0	15.0	15.0	6.0	15.0
Minimum Split (s)	16.1	16.1	23.9	23.9	14.9	23.9
Total Split (s)	20.0	20.0	35.1	35.1	14.9	50.0
Total Split (%)	28.6%	28.6%	50.1%	50.1%	21.3%	71.4%
Yellow Time (s)	5.1	5.1	5.9	5.9	5.9	5.9
All-Red Time (s)	3.0	3.0	3.0	3.0	3.0	3.0
Lost Time Adjust (s)	0.0	0.0	0.0	0.0	0.0	0.0
Total Lost Time (s)	8.1	8.1	8.9	8.9	8.9	8.9
Lead/Lag			Lag	Lag	Lead	
Lead-Lag Optimize?			Yes	Yes	Yes	
Recall Mode	None	None	Min	Min	None	Min
Act Effct Green (s)	11.3	11.3	25.6	25.6	6.1	36.8
Actuated g/C Ratio	0.17	0.17	0.39	0.39	0.09	0.56
v/c Ratio	0.75	0.15	0.83	0.41	0.42	0.32
Control Delay	45.0	9.9	26.2	3.7	38.7	7.9
Queue Delay	0.0	0.0	0.0	0.0	0.0	0.0
Total Delay	45.0	9.9	26.2	3.7	38.7	7.9
LOS	D	A	C	A	D	A

Lane Group	WBL	WBR	NBT	NBR	SBL	SBT
Approach Delay	39.0		21.0			11.0
Approach LOS	D		C			B

Intersection Summary	
Area Type:	Other
Cycle Length: 70	
Actuated Cycle Length: 65.5	
Natural Cycle: 70	
Control Type: Actuated-Uncoordinated	
Maximum v/c Ratio: 0.83	
Intersection Signal Delay: 20.2	Intersection LOS: C
Intersection Capacity Utilization 68.9%	ICU Level of Service C
Analysis Period (min) 15	

Splits and Phases: 1: SR 5 (US 1) & Belle Terre Blvd

Intersection	
Int Delay, s/veh	1.2

Movement	EBL	EBT	EBR	WBL	WBT	WBR	NBL	NBT	NBR	SBL	SBT	SBR
Vol, veh/h	23	364	10	4	242	41	2	1	4	23	1	18
Conflicting Peds, #/hr	0	0	0	0	0	0	0	0	0	0	0	0
Sign Control	Free	Free	Free	Free	Free	Free	Stop	Stop	Stop	Stop	Stop	Stop
RT Channelized	-	-	None	-	-	None	-	-	None	-	-	None
Storage Length	-	-	-	-	-	-	-	-	-	-	-	-
Veh in Median Storage, #	-	0	-	-	0	-	-	0	-	-	0	-
Grade, %	-	0	-	-	0	-	-	0	-	-	0	-
Peak Hour Factor	95	95	95	95	95	95	95	95	95	95	95	95
Heavy Vehicles, %	2	2	2	2	2	2	0	0	0	0	0	0
Mvmt Flow	24	383	11	4	255	43	2	1	4	24	1	19

Major/Minor	Major1			Major2			Minor1			Minor2		
Conflicting Flow All	298	0	0	394	0	0	732	743	388	724	727	276
Stage 1	-	-	-	-	-	-	437	437	-	285	285	-
Stage 2	-	-	-	-	-	-	295	306	-	439	442	-
Critical Hdwy	4.12	-	-	4.12	-	-	7.1	6.5	6.2	7.1	6.5	6.2
Critical Hdwy Stg 1	-	-	-	-	-	-	6.1	5.5	-	6.1	5.5	-
Critical Hdwy Stg 2	-	-	-	-	-	-	6.1	5.5	-	6.1	5.5	-
Follow-up Hdwy	2.218	-	-	2.218	-	-	3.5	4	3.3	3.5	4	3.3
Pot Cap-1 Maneuver	1263	-	-	1165	-	-	339	346	665	344	353	768
Stage 1	-	-	-	-	-	-	602	583	-	727	679	-
Stage 2	-	-	-	-	-	-	718	665	-	601	580	-
Platoon blocked, %		-	-		-	-						
Mov Cap-1 Maneuver	1263	-	-	1165	-	-	323	336	665	334	343	768
Mov Cap-2 Maneuver	-	-	-	-	-	-	323	336	-	334	343	-
Stage 1	-	-	-	-	-	-	588	569	-	710	676	-
Stage 2	-	-	-	-	-	-	696	662	-	582	566	-

Approach	EB	WB	NB	SB
HCM Control Delay, s	0.5	0.1	12.9	14.1
HCM LOS			B	B

Minor Lane/Major Mvmt	NBLn1	EBL	EBT	EBR	WBL	WBT	WBR	SBLn1
Capacity (veh/h)	461	1263	-	-	1165	-	-	441
HCM Lane V/C Ratio	0.016	0.019	-	-	0.004	-	-	0.1
HCM Control Delay (s)	12.9	7.9	0	-	8.1	0	-	14.1
HCM Lane LOS	B	A	A	-	A	A	-	B
HCM 95th %tile Q(veh)	0	0.1	-	-	0	-	-	0.3

Intersection	
Int Delay, s/veh	0.3

Movement	EBT	EBR	WBL	WBT	NBL	NBR
Vol, veh/h	375	16	8	281	6	5
Conflicting Peds, #/hr	0	0	0	0	0	0
Sign Control	Free	Free	Free	Free	Stop	Stop
RT Channelized	-	None	-	None	-	None
Storage Length	-	-	-	-	0	-
Veh in Median Storage, #	0	-	-	0	0	-
Grade, %	0	-	-	0	0	-
Peak Hour Factor	95	95	95	95	95	95
Heavy Vehicles, %	2	2	2	2	0	0
Mvmt Flow	395	17	8	296	6	5

Major/Minor	Major1		Major2		Minor1	
Conflicting Flow All	0	0	412	0	716	403
Stage 1	-	-	-	-	403	-
Stage 2	-	-	-	-	313	-
Critical Hdwy	-	-	4.12	-	6.4	6.2
Critical Hdwy Stg 1	-	-	-	-	5.4	-
Critical Hdwy Stg 2	-	-	-	-	5.4	-
Follow-up Hdwy	-	-	2.218	-	3.5	3.3
Pot Cap-1 Maneuver	-	-	1147	-	400	652
Stage 1	-	-	-	-	679	-
Stage 2	-	-	-	-	746	-
Platoon blocked, %	-	-		-		
Mov Cap-1 Maneuver	-	-	1147	-	397	652
Mov Cap-2 Maneuver	-	-	-	-	397	-
Stage 1	-	-	-	-	679	-
Stage 2	-	-	-	-	740	-

Approach	EB	WB	NB
HCM Control Delay, s	0	0.2	12.6
HCM LOS			B

Minor Lane/Major Mvmt	NBLn1	EBT	EBR	WBL	WBT
Capacity (veh/h)	483	-	-	1147	-
HCM Lane V/C Ratio	0.024	-	-	0.007	-
HCM Control Delay (s)	12.6	-	-	8.2	0
HCM Lane LOS	B	-	-	A	A
HCM 95th %tile Q(veh)	0.1	-	-	0	-

Intersection	
Int Delay, s/veh	0.7

Movement	EBL	EBT	EBR	WBL	WBT	WBR	NBL	NBT	NBR	SBL	SBT	SBR
Vol, veh/h	7	364	9	14	276	11	6	1	7	6	1	7
Conflicting Peds, #/hr	0	0	0	0	0	0	0	0	0	0	0	0
Sign Control	Free	Free	Free	Free	Free	Free	Stop	Stop	Stop	Stop	Stop	Stop
RT Channelized	-	-	None	-	-	None	-	-	None	-	-	None
Storage Length	-	-	-	-	-	-	-	-	-	-	-	-
Veh in Median Storage, #	-	0	-	-	0	-	-	0	-	-	0	-
Grade, %	-	0	-	-	0	-	-	0	-	-	0	-
Peak Hour Factor	95	95	95	95	95	95	95	95	95	95	95	95
Heavy Vehicles, %	2	2	2	2	2	2	0	0	0	0	0	0
Mvmt Flow	7	383	9	15	291	12	6	1	7	6	1	7

Major/Minor	Major1			Major2			Minor1			Minor2		
Conflicting Flow All	302	0	0	393	0	0	733	735	388	733	733	296
Stage 1	-	-	-	-	-	-	403	403	-	326	326	-
Stage 2	-	-	-	-	-	-	330	332	-	407	407	-
Critical Hdwy	4.12	-	-	4.12	-	-	7.1	6.5	6.2	7.1	6.5	6.2
Critical Hdwy Stg 1	-	-	-	-	-	-	6.1	5.5	-	6.1	5.5	-
Critical Hdwy Stg 2	-	-	-	-	-	-	6.1	5.5	-	6.1	5.5	-
Follow-up Hdwy	2.218	-	-	2.218	-	-	3.5	4	3.3	3.5	4	3.3
Pot Cap-1 Maneuver	1259	-	-	1166	-	-	339	349	665	339	350	748
Stage 1	-	-	-	-	-	-	628	603	-	691	652	-
Stage 2	-	-	-	-	-	-	687	648	-	625	601	-
Platoon blocked, %		-	-		-	-						
Mov Cap-1 Maneuver	1259	-	-	1166	-	-	329	341	665	329	342	748
Mov Cap-2 Maneuver	-	-	-	-	-	-	329	341	-	329	342	-
Stage 1	-	-	-	-	-	-	624	599	-	686	642	-
Stage 2	-	-	-	-	-	-	669	638	-	613	597	-

Approach	EB	WB	NB	SB
HCM Control Delay, s	0.1	0.4	13.4	13.1
HCM LOS			B	B

Minor Lane/Major Mvmt	NBLn1	EBL	EBT	EBR	WBL	WBT	WBR	SBLn1
Capacity (veh/h)	442	1259	-	-	1166	-	-	459
HCM Lane V/C Ratio	0.033	0.006	-	-	0.013	-	-	0.032
HCM Control Delay (s)	13.4	7.9	0	-	8.1	0	-	13.1
HCM Lane LOS	B	A	A	-	A	A	-	B
HCM 95th %tile Q(veh)	0.1	0	-	-	0	-	-	0.1

Intersection	
Int Delay, s/veh	1.2

Movement	EBT	EBR	WBL	WBT	NBL	NBR
Vol, veh/h	364	13	29	293	8	47
Conflicting Peds, #/hr	0	0	0	0	0	0
Sign Control	Free	Free	Free	Free	Stop	Stop
RT Channelized	-	None	-	None	-	None
Storage Length	-	-	-	-	0	-
Veh in Median Storage, #	0	-	-	0	0	-
Grade, %	0	-	-	0	0	-
Peak Hour Factor	95	95	95	95	95	95
Heavy Vehicles, %	2	2	2	2	0	0
Mvmt Flow	383	14	31	308	8	49

Major/Minor	Major1		Major2		Minor1	
Conflicting Flow All	0	0	397	0	759	390
Stage 1	-	-	-	-	390	-
Stage 2	-	-	-	-	369	-
Critical Hdwy	-	-	4.12	-	6.4	6.2
Critical Hdwy Stg 1	-	-	-	-	5.4	-
Critical Hdwy Stg 2	-	-	-	-	5.4	-
Follow-up Hdwy	-	-	2.218	-	3.5	3.3
Pot Cap-1 Maneuver	-	-	1162	-	377	663
Stage 1	-	-	-	-	689	-
Stage 2	-	-	-	-	704	-
Platoon blocked, %	-	-		-		
Mov Cap-1 Maneuver	-	-	1162	-	365	663
Mov Cap-2 Maneuver	-	-	-	-	365	-
Stage 1	-	-	-	-	689	-
Stage 2	-	-	-	-	681	-

Approach	EB	WB	NB
HCM Control Delay, s	0	0.7	11.7
HCM LOS			B

Minor Lane/Major Mvmt	NBLn1	EBT	EBR	WBL	WBT
Capacity (veh/h)	593	-	-	1162	-
HCM Lane V/C Ratio	0.098	-	-	0.026	-
HCM Control Delay (s)	11.7	-	-	8.2	0
HCM Lane LOS	B	-	-	A	A
HCM 95th %tile Q(veh)	0.3	-	-	0.1	-

Intersection	
Int Delay, s/veh	1

Movement	WBL	WBR	NBT	NBR	SBL	SBT
Vol, veh/h	14	40	382	35	16	312
Conflicting Peds, #/hr	0	0	0	0	0	0
Sign Control	Stop	Stop	Free	Free	Free	Free
RT Channelized	-	None	-	None	-	None
Storage Length	0	-	-	-	-	-
Veh in Median Storage, #	0	-	0	-	-	0
Grade, %	0	-	0	-	-	0
Peak Hour Factor	95	95	95	95	95	95
Heavy Vehicles, %	0	0	2	2	2	2
Mvmt Flow	15	42	402	37	17	328

Major/Minor	Minor1		Major1		Major2	
Conflicting Flow All	783	421	0	0	439	0
Stage 1	421	-	-	-	-	-
Stage 2	362	-	-	-	-	-
Critical Hdwy	6.4	6.2	-	-	4.12	-
Critical Hdwy Stg 1	5.4	-	-	-	-	-
Critical Hdwy Stg 2	5.4	-	-	-	-	-
Follow-up Hdwy	3.5	3.3	-	-	2.218	-
Pot Cap-1 Maneuver	365	637	-	-	1121	-
Stage 1	667	-	-	-	-	-
Stage 2	709	-	-	-	-	-
Platoon blocked, %			-	-		-
Mov Cap-1 Maneuver	358	637	-	-	1121	-
Mov Cap-2 Maneuver	358	-	-	-	-	-
Stage 1	667	-	-	-	-	-
Stage 2	696	-	-	-	-	-

Approach	WB	NB	SB
HCM Control Delay, s	12.6	0	0.4
HCM LOS	B		

Minor Lane/Major Mvmt	NBT	NBR	WBLn1	SBL	SBT
Capacity (veh/h)	-	-	530	1121	-
HCM Lane V/C Ratio	-	-	0.107	0.015	-
HCM Control Delay (s)	-	-	12.6	8.3	0
HCM Lane LOS	-	-	B	A	A
HCM 95th %tile Q(veh)	-	-	0.4	0	-

Intersection	
Int Delay, s/veh	1.1

Movement	EBL	EBR	NBL	NBT	SBT	SBR
Vol, veh/h	27	15	36	386	313	40
Conflicting Peds, #/hr	0	0	0	0	0	0
Sign Control	Stop	Stop	Free	Free	Free	Free
RT Channelized	-	None	-	None	-	None
Storage Length	0	-	-	-	-	-
Veh in Median Storage, #	0	-	-	0	0	-
Grade, %	0	-	-	0	0	-
Peak Hour Factor	95	95	95	95	95	95
Heavy Vehicles, %	0	0	2	2	2	2
Mvmt Flow	28	16	38	406	329	42

Major/Minor	Minor2		Major1		Major2	
Conflicting Flow All	833	351	372	0	-	0
Stage 1	351	-	-	-	-	-
Stage 2	482	-	-	-	-	-
Critical Hdwy	6.4	6.2	4.12	-	-	-
Critical Hdwy Stg 1	5.4	-	-	-	-	-
Critical Hdwy Stg 2	5.4	-	-	-	-	-
Follow-up Hdwy	3.5	3.3	2.218	-	-	-
Pot Cap-1 Maneuver	341	697	1186	-	-	-
Stage 1	717	-	-	-	-	-
Stage 2	625	-	-	-	-	-
Platoon blocked, %				-	-	-
Mov Cap-1 Maneuver	327	697	1186	-	-	-
Mov Cap-2 Maneuver	327	-	-	-	-	-
Stage 1	717	-	-	-	-	-
Stage 2	599	-	-	-	-	-

Approach	EB	NB	SB
HCM Control Delay, s	15	0.7	0
HCM LOS	C		

Minor Lane/Major Mvmt	NBL	NBT	EBLn1	SBT	SBR
Capacity (veh/h)	1186	-	403	-	-
HCM Lane V/C Ratio	0.032	-	0.11	-	-
HCM Control Delay (s)	8.1	0	15	-	-
HCM Lane LOS	A	A	C	-	-
HCM 95th %tile Q(veh)	0.1	-	0.4	-	-

Intersection	
Int Delay, s/veh	0.6

Movement	EBL	EBR	NBL	NBT	SBT	SBR
Vol, veh/h	19	6	14	399	347	31
Conflicting Peds, #/hr	0	0	0	0	0	0
Sign Control	Stop	Stop	Free	Free	Free	Free
RT Channelized	-	None	-	None	-	None
Storage Length	0	-	-	-	-	-
Veh in Median Storage, #	0	-	-	0	0	-
Grade, %	0	-	-	0	0	-
Peak Hour Factor	95	95	95	95	95	95
Heavy Vehicles, %	0	0	2	2	2	2
Mvmt Flow	20	6	15	420	365	33

Major/Minor	Minor2		Major1		Major2	
Conflicting Flow All	831	382	398	0	-	0
Stage 1	382	-	-	-	-	-
Stage 2	449	-	-	-	-	-
Critical Hdwy	6.4	6.2	4.12	-	-	-
Critical Hdwy Stg 1	5.4	-	-	-	-	-
Critical Hdwy Stg 2	5.4	-	-	-	-	-
Follow-up Hdwy	3.5	3.3	2.218	-	-	-
Pot Cap-1 Maneuver	342	670	1161	-	-	-
Stage 1	694	-	-	-	-	-
Stage 2	647	-	-	-	-	-
Platoon blocked, %				-	-	-
Mov Cap-1 Maneuver	336	670	1161	-	-	-
Mov Cap-2 Maneuver	336	-	-	-	-	-
Stage 1	694	-	-	-	-	-
Stage 2	636	-	-	-	-	-

Approach	EB	NB	SB
HCM Control Delay, s	15.1	0.3	0
HCM LOS	C		

Minor Lane/Major Mvmt	NBL	NBT	EBLn1	SBT	SBR
Capacity (veh/h)	1161	-	382	-	-
HCM Lane V/C Ratio	0.013	-	0.069	-	-
HCM Control Delay (s)	8.1	0	15.1	-	-
HCM Lane LOS	A	A	C	-	-
HCM 95th %tile Q(veh)	0	-	0.2	-	-

Intersection	
Int Delay, s/veh	1.4

Movement	WBL	WBR	NBT	NBR	SBL	SBT
Vol, veh/h	8	43	412	6	68	370
Conflicting Peds, #/hr	0	0	0	0	0	0
Sign Control	Stop	Stop	Free	Free	Free	Free
RT Channelized	-	None	-	None	-	None
Storage Length	0	-	-	-	-	-
Veh in Median Storage, #	0	-	0	-	-	0
Grade, %	0	-	0	-	-	0
Peak Hour Factor	95	95	95	95	95	95
Heavy Vehicles, %	0	0	2	2	2	2
Mvmt Flow	8	45	434	6	72	389

Major/Minor	Minor1		Major1		Major2	
Conflicting Flow All	970	437	0	0	440	0
Stage 1	437	-	-	-	-	-
Stage 2	533	-	-	-	-	-
Critical Hdwy	6.4	6.2	-	-	4.12	-
Critical Hdwy Stg 1	5.4	-	-	-	-	-
Critical Hdwy Stg 2	5.4	-	-	-	-	-
Follow-up Hdwy	3.5	3.3	-	-	2.218	-
Pot Cap-1 Maneuver	283	624	-	-	1120	-
Stage 1	655	-	-	-	-	-
Stage 2	593	-	-	-	-	-
Platoon blocked, %			-	-		-
Mov Cap-1 Maneuver	260	624	-	-	1120	-
Mov Cap-2 Maneuver	260	-	-	-	-	-
Stage 1	655	-	-	-	-	-
Stage 2	544	-	-	-	-	-

Approach	WB	NB	SB
HCM Control Delay, s	12.9	0	1.3
HCM LOS	B		

Minor Lane/Major Mvmt	NBT	NBR	WBLn1	SBL	SBT
Capacity (veh/h)	-	-	512	1120	-
HCM Lane V/C Ratio	-	-	0.105	0.064	-
HCM Control Delay (s)	-	-	12.9	8.4	0
HCM Lane LOS	-	-	B	A	A
HCM 95th %tile Q(veh)	-	-	0.3	0.2	-

Intersection	
Int Delay, s/veh	0.6

Movement	EBL	EBR	NBL	NBT	SBT	SBR
Vol, veh/h	18	16	6	449	422	28
Conflicting Peds, #/hr	0	0	0	0	0	0
Sign Control	Stop	Stop	Free	Free	Free	Free
RT Channelized	-	None	-	None	-	None
Storage Length	0	-	-	-	-	-
Veh in Median Storage, #	0	-	-	0	0	-
Grade, %	0	-	-	0	0	-
Peak Hour Factor	95	95	95	95	95	95
Heavy Vehicles, %	0	0	2	2	2	2
Mvmt Flow	19	17	6	473	444	29

Major/Minor	Minor2		Major1		Major2	
Conflicting Flow All	944	459	474	0	-	0
Stage 1	459	-	-	-	-	-
Stage 2	485	-	-	-	-	-
Critical Hdwy	6.4	6.2	4.12	-	-	-
Critical Hdwy Stg 1	5.4	-	-	-	-	-
Critical Hdwy Stg 2	5.4	-	-	-	-	-
Follow-up Hdwy	3.5	3.3	2.218	-	-	-
Pot Cap-1 Maneuver	293	606	1088	-	-	-
Stage 1	641	-	-	-	-	-
Stage 2	623	-	-	-	-	-
Platoon blocked, %				-	-	-
Mov Cap-1 Maneuver	291	606	1088	-	-	-
Mov Cap-2 Maneuver	291	-	-	-	-	-
Stage 1	641	-	-	-	-	-
Stage 2	619	-	-	-	-	-

Approach	EB	NB	SB
HCM Control Delay, s	15.3	0.1	0
HCM LOS	C		

Minor Lane/Major Mvmt	NBL	NBT	EBLn1	SBT	SBR
Capacity (veh/h)	1088	-	385	-	-
HCM Lane V/C Ratio	0.006	-	0.093	-	-
HCM Control Delay (s)	8.3	0	15.3	-	-
HCM Lane LOS	A	A	C	-	-
HCM 95th %tile Q(veh)	0	-	0.3	-	-

Intersection	
Int Delay, s/veh	0.4

Movement	EBL	EBR	NBL	NBT	SBT	SBR
Vol, veh/h	12	8	6	461	442	17
Conflicting Peds, #/hr	0	0	0	0	0	0
Sign Control	Stop	Stop	Free	Free	Free	Free
RT Channelized	-	None	-	None	-	None
Storage Length	0	-	-	-	-	-
Veh in Median Storage, #	0	-	-	0	0	-
Grade, %	0	-	-	0	0	-
Peak Hour Factor	95	95	95	95	95	95
Heavy Vehicles, %	0	0	2	2	2	2
Mvmt Flow	13	8	6	485	465	18

Major/Minor	Minor2		Major1		Major2	
Conflicting Flow All	972	474	483	0	-	0
Stage 1	474	-	-	-	-	-
Stage 2	498	-	-	-	-	-
Critical Hdwy	6.4	6.2	4.12	-	-	-
Critical Hdwy Stg 1	5.4	-	-	-	-	-
Critical Hdwy Stg 2	5.4	-	-	-	-	-
Follow-up Hdwy	3.5	3.3	2.218	-	-	-
Pot Cap-1 Maneuver	282	595	1080	-	-	-
Stage 1	630	-	-	-	-	-
Stage 2	615	-	-	-	-	-
Platoon blocked, %				-	-	-
Mov Cap-1 Maneuver	280	595	1080	-	-	-
Mov Cap-2 Maneuver	280	-	-	-	-	-
Stage 1	630	-	-	-	-	-
Stage 2	610	-	-	-	-	-

Approach	EB	NB	SB
HCM Control Delay, s	15.8	0.1	0
HCM LOS	C		

Minor Lane/Major Mvmt	NBL	NBT	EBLn1	SBT	SBR
Capacity (veh/h)	1080	-	355	-	-
HCM Lane V/C Ratio	0.006	-	0.059	-	-
HCM Control Delay (s)	8.4	0	15.8	-	-
HCM Lane LOS	A	A	C	-	-
HCM 95th %tile Q(veh)	0	-	0.2	-	-

Intersection	
Int Delay, s/veh	0.4

Movement	EBL	EBR	NBL	NBT	SBT	SBR
Vol, veh/h	15	3	11	462	456	22
Conflicting Peds, #/hr	0	0	0	0	0	0
Sign Control	Stop	Stop	Free	Free	Free	Free
RT Channelized	-	None	-	None	-	None
Storage Length	0	-	-	-	-	-
Veh in Median Storage, #	0	-	-	0	0	-
Grade, %	0	-	-	0	0	-
Peak Hour Factor	95	95	95	95	95	95
Heavy Vehicles, %	0	0	2	2	2	2
Mvmt Flow	16	3	12	486	480	23

Major/Minor	Minor2		Major1		Major2	
Conflicting Flow All	1001	492	503	0	-	0
Stage 1	492	-	-	-	-	-
Stage 2	509	-	-	-	-	-
Critical Hdwy	6.4	6.2	4.12	-	-	-
Critical Hdwy Stg 1	5.4	-	-	-	-	-
Critical Hdwy Stg 2	5.4	-	-	-	-	-
Follow-up Hdwy	3.5	3.3	2.218	-	-	-
Pot Cap-1 Maneuver	271	581	1061	-	-	-
Stage 1	619	-	-	-	-	-
Stage 2	608	-	-	-	-	-
Platoon blocked, %				-	-	-
Mov Cap-1 Maneuver	267	581	1061	-	-	-
Mov Cap-2 Maneuver	267	-	-	-	-	-
Stage 1	619	-	-	-	-	-
Stage 2	599	-	-	-	-	-

Approach	EB	NB	SB
HCM Control Delay, s	18.1	0.2	0
HCM LOS	C		

Minor Lane/Major Mvmt	NBL	NBT	EBLn1	SBT	SBR
Capacity (veh/h)	1061	-	293	-	-
HCM Lane V/C Ratio	0.011	-	0.065	-	-
HCM Control Delay (s)	8.4	0	18.1	-	-
HCM Lane LOS	A	A	C	-	-
HCM 95th %tile Q(veh)	0	-	0.2	-	-

Intersection	
Int Delay, s/veh	0.6

Movement	EBL	EBR	NBL	NBT	SBT	SBR
Vol, veh/h	13	15	20	457	463	29
Conflicting Peds, #/hr	0	0	0	0	0	0
Sign Control	Stop	Stop	Free	Free	Free	Free
RT Channelized	-	None	-	None	-	None
Storage Length	0	-	-	-	-	-
Veh in Median Storage, #	0	-	-	0	0	-
Grade, %	0	-	-	0	0	-
Peak Hour Factor	95	95	95	95	95	95
Heavy Vehicles, %	0	0	2	2	2	2
Mvmt Flow	14	16	21	481	487	31

Major/Minor	Minor2		Major1		Major2	
Conflicting Flow All	1026	503	518	0	-	0
Stage 1	503	-	-	-	-	-
Stage 2	523	-	-	-	-	-
Critical Hdwy	6.4	6.2	4.12	-	-	-
Critical Hdwy Stg 1	5.4	-	-	-	-	-
Critical Hdwy Stg 2	5.4	-	-	-	-	-
Follow-up Hdwy	3.5	3.3	2.218	-	-	-
Pot Cap-1 Maneuver	262	573	1048	-	-	-
Stage 1	612	-	-	-	-	-
Stage 2	599	-	-	-	-	-
Platoon blocked, %				-	-	-
Mov Cap-1 Maneuver	255	573	1048	-	-	-
Mov Cap-2 Maneuver	255	-	-	-	-	-
Stage 1	612	-	-	-	-	-
Stage 2	583	-	-	-	-	-

Approach	EB	NB	SB
HCM Control Delay, s	15.8	0.4	0
HCM LOS	C		

Minor Lane/Major Mvmt	NBL	NBT	EBLn1	SBT	SBR
Capacity (veh/h)	1048	-	363	-	-
HCM Lane V/C Ratio	0.02	-	0.081	-	-
HCM Control Delay (s)	8.5	0	15.8	-	-
HCM Lane LOS	A	A	C	-	-
HCM 95th %tile Q(veh)	0.1	-	0.3	-	-

Intersection	
Int Delay, s/veh	1.3

Movement	EBL	EBR	NBL	NBT	SBT	SBR
Vol, veh/h	54	2	8	462	490	78
Conflicting Peds, #/hr	0	0	0	0	0	0
Sign Control	Stop	Stop	Free	Free	Free	Free
RT Channelized	-	None	-	None	-	None
Storage Length	0	-	-	-	-	-
Veh in Median Storage, #	0	-	-	0	0	-
Grade, %	0	-	-	0	0	-
Peak Hour Factor	95	95	95	95	95	95
Heavy Vehicles, %	0	0	2	2	2	2
Mvmt Flow	57	2	8	486	516	82

Major/Minor	Minor2		Major1		Major2	
Conflicting Flow All	1060	557	598	0	-	0
Stage 1	557	-	-	-	-	-
Stage 2	503	-	-	-	-	-
Critical Hdwy	6.4	6.2	4.12	-	-	-
Critical Hdwy Stg 1	5.4	-	-	-	-	-
Critical Hdwy Stg 2	5.4	-	-	-	-	-
Follow-up Hdwy	3.5	3.3	2.218	-	-	-
Pot Cap-1 Maneuver	250	534	979	-	-	-
Stage 1	578	-	-	-	-	-
Stage 2	612	-	-	-	-	-
Platoon blocked, %				-	-	-
Mov Cap-1 Maneuver	247	534	979	-	-	-
Mov Cap-2 Maneuver	247	-	-	-	-	-
Stage 1	578	-	-	-	-	-
Stage 2	605	-	-	-	-	-

Approach	EB	NB	SB
HCM Control Delay, s	23.6	0.1	0
HCM LOS	C		

Minor Lane/Major Mvmt	NBL	NBT	EBLn1	SBT	SBR
Capacity (veh/h)	979	-	252	-	-
HCM Lane V/C Ratio	0.009	-	0.234	-	-
HCM Control Delay (s)	8.7	0	23.6	-	-
HCM Lane LOS	A	A	C	-	-
HCM 95th %tile Q(veh)	0	-	0.9	-	-

Lane Group	EBL	EBT	EBR	WBL	WBT	WBR	NBL	NBT	NBR	SBL	SBT	SBR
Lane Configurations												
Volume (vph)	405	560	93	200	599	595	47	372	97	421	275	280
Ideal Flow (vphpl)	1900	1900	1900	1900	1900	1900	1900	1900	1900	1900	1900	1900
Lane Width (ft)	12	12	12	12	12	12	12	12	12	12	12	12
Grade (%)		0%			0%			0%			0%	
Storage Length (ft)	450		475	485		485	0		280	525		0
Storage Lanes	2		1	1		1	1		1	2		1
Taper Length (ft)	50			50			200			25		
Satd. Flow (prot)	3467	3539	1615	1787	3471	1599	1770	1863	1583	3433	1863	1583
Flt Permitted	0.950			0.950			0.950			0.950		
Satd. Flow (perm)	3467	3539	1615	1787	3471	1599	1770	1863	1583	3433	1863	1583
Right Turn on Red			Yes			Yes			Yes			Yes
Satd. Flow (RTOR)			242			111			244			295
Link Speed (mph)		55			55			50			45	
Link Distance (ft)		2394			2403			1138			1482	
Travel Time (s)		29.7			29.8			15.5			22.5	
Confl. Peds. (#/hr)												
Confl. Bikes (#/hr)												
Peak Hour Factor	0.95	0.95	0.95	0.95	0.95	0.95	0.95	0.95	0.95	0.95	0.95	0.95
Growth Factor	100%	100%	100%	100%	100%	100%	100%	100%	100%	100%	100%	100%
Heavy Vehicles (%)	1%	2%	0%	1%	4%	1%	2%	2%	2%	2%	2%	2%
Bus Blockages (#/hr)	0	0	0	0	0	0	0	0	0	0	0	0
Parking (#/hr)												
Mid-Block Traffic (%)		0%			0%			0%			0%	
Shared Lane Traffic (%)												
Lane Group Flow (vph)	426	589	98	211	631	626	49	392	102	443	289	295
Turn Type	Prot	NA	Prot	Prot	NA	pm+ov	Prot	NA	Perm	Prot	NA	Perm
Protected Phases	1	6	6	5	2	3	7	4		3	8	
Permitted Phases						2			4			8
Detector Phase	1	6	6	5	2	3	7	4	4	3	8	8
Switch Phase												
Minimum Initial (s)	5.0	17.0	17.0	5.0	17.0	10.0	10.0	6.0	6.0	10.0	6.0	6.0
Minimum Split (s)	13.8	25.8	25.8	13.8	44.8	18.2	18.5	14.5	14.5	18.2	51.2	51.2
Total Split (s)	25.3	40.6	40.6	29.7	45.0	27.8	18.5	41.9	41.9	27.8	51.2	51.2
Total Split (%)	18.1%	29.0%	29.0%	21.2%	32.1%	19.9%	13.2%	29.9%	29.9%	19.9%	36.6%	36.6%
Yellow Time (s)	6.0	6.0	6.0	6.0	6.0	4.8	5.1	5.1	5.1	4.8	4.8	4.8
All-Red Time (s)	2.8	2.8	2.8	2.8	2.8	3.4	3.4	3.4	3.4	3.4	3.4	3.4
Lost Time Adjust (s)	0.0	0.0	0.0	0.0	0.0	0.0	0.0	0.0	0.0	0.0	0.0	0.0
Total Lost Time (s)	8.8	8.8	8.8	8.8	8.8	8.2	8.5	8.5	8.5	8.2	8.2	8.2
Lead/Lag	Lead	Lag	Lag	Lead	Lag	Lead	Lead	Lag	Lag	Lead	Lag	Lag
Lead-Lag Optimize?	Yes	Yes	Yes	Yes	Yes	Yes	Yes	Yes	Yes	Yes	Yes	Yes
Recall Mode	None	Min	Min	None	Min	Min	None	None	None	Min	None	None
Act Effct Green (s)	16.6	28.1	28.1	18.9	30.3	58.6	10.1	30.6	30.6	19.4	44.3	44.3
Actuated g/C Ratio	0.13	0.21	0.21	0.14	0.23	0.45	0.08	0.23	0.23	0.15	0.34	0.34
v/c Ratio	0.97	0.78	0.18	0.82	0.79	0.81	0.36	0.90	0.18	0.88	0.46	0.41
Control Delay	94.8	57.5	0.8	81.0	55.5	35.4	69.1	74.6	0.7	74.7	39.7	5.6
Queue Delay	0.0	0.0	0.0	0.0	0.0	0.0	0.0	0.0	0.0	0.0	0.0	0.0
Total Delay	94.8	57.5	0.8	81.0	55.5	35.4	69.1	74.6	0.7	74.7	39.7	5.6
LOS	F	E	A	F	E	D	E	E	A	E	D	A

Lane Group	EBL	EBT	EBR	WBL	WBT	WBR	NBL	NBT	NBR	SBL	SBT	SBR
Approach Delay		66.8			50.6			60.3			45.0	
Approach LOS		E			D			E			D	

Intersection Summary	
Area Type:	Other
Cycle Length: 140	
Actuated Cycle Length: 131.5	
Natural Cycle: 140	
Control Type: Actuated-Uncoordinated	
Maximum v/c Ratio: 0.97	
Intersection Signal Delay: 54.8	Intersection LOS: D
Intersection Capacity Utilization 89.2%	ICU Level of Service E
Analysis Period (min) 15	

Splits and Phases: 15: Belle Terre Blvd/Belle Terre Pkwy & SR 100

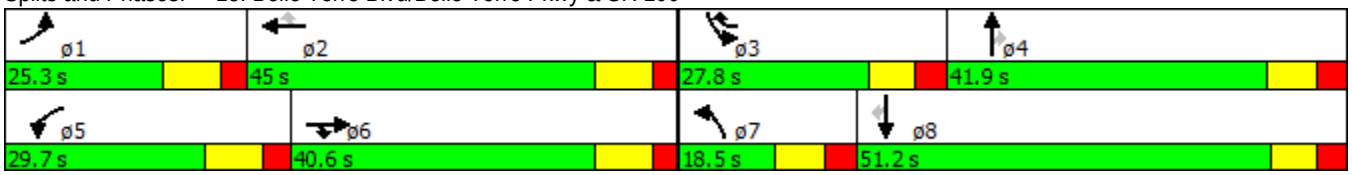

Intersection	
Int Delay, s/veh	0.5

Movement	EBL	EBR	NBL	NBT	SBT	SBR
Vol, veh/h	10	38	41	1487	1161	23
Conflicting Peds, #/hr	0	0	0	0	0	0
Sign Control	Stop	Stop	Free	Free	Free	Free
RT Channelized	-	None	-	None	-	None
Storage Length	0	-	380	-	-	-
Veh in Median Storage, #	1	-	-	0	0	-
Grade, %	0	-	-	0	0	-
Peak Hour Factor	95	95	95	95	95	95
Heavy Vehicles, %	0	11	2	2	2	2
Mvmt Flow	11	40	43	1565	1222	24

Major/Minor	Minor2		Major1		Major2	
Conflicting Flow All	2103	623	1246	0	-	0
Stage 1	1234	-	-	-	-	-
Stage 2	869	-	-	-	-	-
Critical Hdwy	6.8	7.12	4.14	-	-	-
Critical Hdwy Stg 1	5.8	-	-	-	-	-
Critical Hdwy Stg 2	5.8	-	-	-	-	-
Follow-up Hdwy	3.5	3.41	2.22	-	-	-
Pot Cap-1 Maneuver	45	408	554	-	-	-
Stage 1	242	-	-	-	-	-
Stage 2	376	-	-	-	-	-
Platoon blocked, %				-	-	-
Mov Cap-1 Maneuver	42	408	554	-	-	-
Mov Cap-2 Maneuver	149	-	-	-	-	-
Stage 1	242	-	-	-	-	-
Stage 2	347	-	-	-	-	-

Approach	EB	NB	SB
HCM Control Delay, s	19.4	0.3	0
HCM LOS	C		

Minor Lane/Major Mvmt	NBL	NBT	EBLn1	SBT	SBR
Capacity (veh/h)	554	-	300	-	-
HCM Lane V/C Ratio	0.078	-	0.168	-	-
HCM Control Delay (s)	12	-	19.4	-	-
HCM Lane LOS	B	-	C	-	-
HCM 95th %tile Q(veh)	0.3	-	0.6	-	-

Intersection	
Int Delay, s/veh	4.6

Movement	EBL	EBT	EBR	WBL	WBT	WBR	NBL	NBT	NBR	SBL	SBT	SBR
Vol, veh/h	23	4	4	81	3	31	5	1417	75	14	1099	30
Conflicting Peds, #/hr	0	0	0	0	0	0	0	0	0	0	0	0
Sign Control	Stop	Stop	Stop	Stop	Stop	Stop	Free	Free	Free	Free	Free	Free
RT Channelized	-	-	None	-	-	None	-	-	None	-	-	None
Storage Length	-	-	-	300	-	-	350	-	250	400	-	-
Veh in Median Storage, #	-	1	-	-	1	-	-	0	-	-	0	-
Grade, %	-	0	-	-	0	-	-	0	-	-	0	-
Peak Hour Factor	95	95	95	95	95	95	95	95	95	95	95	95
Heavy Vehicles, %	0	0	0	0	0	0	2	2	2	2	2	2
Mvmt Flow	24	4	4	85	3	33	5	1492	79	15	1157	32

Major/Minor	Minor2			Minor1			Major1			Major2		
Conflicting Flow All	1960	2704	594	2112	2720	746	1188	0	0	1492	0	0
Stage 1	1202	1202	-	1502	1502	-	-	-	-	-	-	-
Stage 2	758	1502	-	610	1218	-	-	-	-	-	-	-
Critical Hdwy	7.5	6.5	6.9	7.5	6.5	6.9	4.14	-	-	4.14	-	-
Critical Hdwy Stg 1	6.5	5.5	-	6.5	5.5	-	-	-	-	-	-	-
Critical Hdwy Stg 2	6.5	5.5	-	6.5	5.5	-	-	-	-	-	-	-
Follow-up Hdwy	3.5	4	3.3	3.5	4	3.3	2.22	-	-	2.22	-	-
Pot Cap-1 Maneuver	39	22	453	~ 30	21	360	583	-	-	446	-	-
Stage 1	199	260	-	130	187	-	-	-	-	-	-	-
Stage 2	370	187	-	453	255	-	-	-	-	-	-	-
Platoon blocked, %								-	-		-	-
Mov Cap-1 Maneuver	34	21	453	~ 28	20	360	583	-	-	446	-	-
Mov Cap-2 Maneuver	125	102	-	99	104	-	-	-	-	-	-	-
Stage 1	197	251	-	129	185	-	-	-	-	-	-	-
Stage 2	328	185	-	426	246	-	-	-	-	-	-	-

Approach	EB	WB	NB	SB
HCM Control Delay, s	40.3	99.2	0	0.2
HCM LOS	E	F		

Minor Lane/Major Mvmt	NBL	NBT	NBR	EBLn1	WBLn1	WBLn2	SBL	SBT	SBR
Capacity (veh/h)	583	-	-	134	99	296	446	-	-
HCM Lane V/C Ratio	0.009	-	-	0.244	0.861	0.121	0.033	-	-
HCM Control Delay (s)	11.2	-	-	40.3	132.9	18.8	13.3	-	-
HCM Lane LOS	B	-	-	E	F	C	B	-	-
HCM 95th %tile Q(veh)	0	-	-	0.9	4.9	0.4	0.1	-	-

Notes

~: Volume exceeds capacity $: Delay exceeds 300s +: Computation Not Defined *: All major volume in platoon

Lane Group	EBL	EBT	EBR	WBL	WBT	WBR	NBL	NBT	NBR	SBL	SBT	SBR
Lane Configurations												
Volume (vph)	146	49	194	51	89	298	248	1207	16	248	898	212
Ideal Flow (vphpl)	1900	1900	1900	1900	1900	1900	1900	1900	1900	1900	1900	1900
Lane Width (ft)	12	12	12	12	12	12	12	12	12	12	12	12
Grade (%)		0%			0%			0%			0%	
Storage Length (ft)	0		150	285		0	325		450	450		275
Storage Lanes	1		1	1		1	1		1	1		1
Taper Length (ft)	50			75			50			50		
Satd. Flow (prot)	1770	1900	1615	1752	1900	1615	1770	3539	1583	1770	3539	1583
Flt Permitted	0.696			0.658			0.950			0.950		
Satd. Flow (perm)	1296	1900	1615	1214	1900	1615	1770	3539	1583	1770	3539	1583
Right Turn on Red			Yes			Yes			Yes			Yes
Satd. Flow (RTOR)			204			314			179			212
Link Speed (mph)		40			40			45			45	
Link Distance (ft)		664			1054			1578			2742	
Travel Time (s)		11.3			18.0			23.9			41.5	
Confl. Peds. (#/hr)												
Confl. Bikes (#/hr)												
Peak Hour Factor	0.95	0.95	0.95	0.95	0.95	0.95	0.95	0.95	0.95	0.95	0.95	0.95
Growth Factor	100%	100%	100%	100%	100%	100%	100%	100%	100%	100%	100%	100%
Heavy Vehicles (%)	2%	0%	0%	3%	0%	0%	2%	2%	2%	2%	2%	2%
Bus Blockages (#/hr)	0	0	0	0	0	0	0	0	0	0	0	0
Parking (#/hr)												
Mid-Block Traffic (%)		0%			0%			0%			0%	
Shared Lane Traffic (%)												
Lane Group Flow (vph)	154	52	204	54	94	314	261	1271	17	261	945	223
Turn Type	pm+pt	NA	Perm	pm+pt	NA	Perm	Prot	NA	Perm	Prot	NA	Perm
Protected Phases	3	8		7	4		1	6		5	2	
Permitted Phases	8		8	4		4			6			2
Detector Phase	3	8	8	7	4	4	1	6	6	5	2	2
Switch Phase												
Minimum Initial (s)	5.0	5.0	5.0	5.0	5.0	5.0	5.0	15.0	15.0	5.0	15.0	15.0
Minimum Split (s)	11.4	11.4	11.4	21.6	41.6	41.6	11.8	21.8	21.8	11.8	29.8	29.8
Total Split (s)	11.5	31.5	31.5	21.6	41.6	41.6	31.6	55.3	55.3	26.6	50.3	50.3
Total Split (%)	8.5%	23.3%	23.3%	16.0%	30.8%	30.8%	23.4%	41.0%	41.0%	19.7%	37.3%	37.3%
Yellow Time (s)	4.4	4.4	4.4	3.6	3.6	3.6	4.8	4.8	4.8	4.8	4.8	4.8
All-Red Time (s)	2.0	2.0	2.0	2.0	2.0	2.0	2.0	2.0	2.0	2.0	2.0	2.0
Lost Time Adjust (s)	0.0	0.0	0.0	0.0	0.0	0.0	0.0	0.0	0.0	0.0	0.0	0.0
Total Lost Time (s)	6.4	6.4	6.4	5.6	5.6	5.6	6.8	6.8	6.8	6.8	6.8	6.8
Lead/Lag	Lead	Lag	Lag	Lead	Lag	Lag	Lead	Lag	Lag	Lead	Lag	Lag
Lead-Lag Optimize?	Yes	Yes	Yes	Yes	Yes	Yes	Yes	Yes	Yes	Yes	Yes	Yes
Recall Mode	None	None	None	None	None	None	None	Min	Min	None	Min	Min
Act Effct Green (s)	15.3	11.3	11.3	20.3	12.1	12.1	20.9	48.0	48.0	19.8	47.0	47.0
Actuated g/C Ratio	0.14	0.10	0.10	0.18	0.11	0.11	0.19	0.43	0.43	0.18	0.42	0.42
v/c Ratio	0.77	0.27	0.59	0.21	0.45	0.69	0.78	0.83	0.02	0.82	0.63	0.28
Control Delay	67.2	52.3	14.1	37.0	53.1	13.5	59.7	34.0	0.1	66.5	28.8	4.9
Queue Delay	0.0	0.0	0.0	0.0	0.0	0.0	0.0	0.0	0.0	0.0	0.0	0.0
Total Delay	67.2	52.3	14.1	37.0	53.1	13.5	59.7	34.0	0.1	66.5	28.8	4.9
LOS	E	D	B	D	D	B	E	C	A	E	C	A

Lane Group	EBL	EBT	EBR	WBL	WBT	WBR	NBL	NBT	NBR	SBL	SBT	SBR
Approach Delay		38.9			24.3			37.9			31.9	
Approach LOS		D			C			D			C	

Intersection Summary	
Area Type:	Other
Cycle Length: 135	
Actuated Cycle Length: 110.7	
Natural Cycle: 135	
Control Type: Actuated-Uncoordinated	
Maximum v/c Ratio: 0.83	
Intersection Signal Delay: 34.2	Intersection LOS: C
Intersection Capacity Utilization 78.5%	ICU Level of Service D
Analysis Period (min) 15	

Splits and Phases: 18: Belle Terre Pkwy & Easthampton Blvd /Central Ave

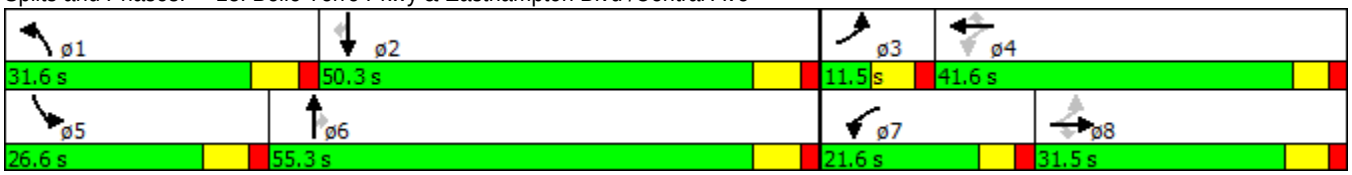

Lane Group	EBL	EBT	EBR	WBL	WBT	WBR	NBL	NBT	NBR	SBL	SBT	SBR
Lane Configurations												
Volume (vph)	59	101	198	200	236	342	185	1330	136	216	960	48
Ideal Flow (vphpl)	1900	1900	1900	1900	1900	1900	1900	1900	1900	1900	1900	1900
Lane Width (ft)	12	12	12	12	12	12	12	12	12	12	12	12
Grade (%)		0%			0%			0%			0%	
Storage Length (ft)	300		250	250		250	350		250	350		250
Storage Lanes	1		1	1		1	1		1	1		1
Taper Length (ft)	50			50			50			50		
Satd. Flow (prot)	1805	1881	1599	1805	1900	1599	1770	3539	1583	1770	3539	1583
Flt Permitted	0.471			0.689			0.190			0.090		
Satd. Flow (perm)	895	1881	1599	1309	1900	1599	354	3539	1583	168	3539	1583
Right Turn on Red			Yes			Yes			Yes			Yes
Satd. Flow (RTOR)			208			215			118			107
Link Speed (mph)		55			55			45			45	
Link Distance (ft)		1429			1119			2742			1415	
Travel Time (s)		17.7			13.9			41.5			21.4	
Confl. Peds. (#/hr)												
Confl. Bikes (#/hr)												
Peak Hour Factor	0.95	0.95	0.95	0.95	0.95	0.95	0.95	0.95	0.95	0.95	0.95	0.95
Growth Factor	100%	100%	100%	100%	100%	100%	100%	100%	100%	100%	100%	100%
Heavy Vehicles (%)	0%	1%	1%	0%	0%	1%	2%	2%	2%	2%	2%	2%
Bus Blockages (#/hr)	0	0	0	0	0	0	0	0	0	0	0	0
Parking (#/hr)												
Mid-Block Traffic (%)		0%			0%			0%			0%	
Shared Lane Traffic (%)												
Lane Group Flow (vph)	62	106	208	211	248	360	195	1400	143	227	1011	51
Turn Type	Perm	NA	Perm	Perm	NA	Perm	pm+pt	NA	Perm	pm+pt	NA	Perm
Protected Phases		4			8		5	2		1	6	
Permitted Phases	4		4	8		8	2		2	6		6
Detector Phase	4	4	4	8	8	8	5	2	2	1	6	6
Switch Phase												
Minimum Initial (s)	7.0	7.0	7.0	7.0	7.0	7.0	7.0	15.0	15.0	7.0	15.0	15.0
Minimum Split (s)	41.0	41.0	41.0	39.0	39.0	39.0	13.8	33.8	33.8	13.8	33.8	33.8
Total Split (s)	41.0	41.0	41.0	41.0	41.0	41.0	17.9	51.8	51.8	17.2	51.1	51.1
Total Split (%)	37.3%	37.3%	37.3%	37.3%	37.3%	37.3%	16.3%	47.1%	47.1%	15.6%	46.5%	46.5%
Yellow Time (s)	5.0	5.0	5.0	5.0	5.0	5.0	4.8	4.8	4.8	4.8	4.8	4.8
All-Red Time (s)	2.0	2.0	2.0	2.0	2.0	2.0	2.0	2.0	2.0	2.0	2.0	2.0
Lost Time Adjust (s)	0.0	0.0	0.0	0.0	0.0	0.0	0.0	0.0	0.0	0.0	0.0	0.0
Total Lost Time (s)	7.0	7.0	7.0	7.0	7.0	7.0	6.8	6.8	6.8	6.8	6.8	6.8
Lead/Lag							Lead	Lag	Lag	Lead	Lag	Lag
Lead-Lag Optimize?							Yes	Yes	Yes	Yes	Yes	Yes
Recall Mode	None	None	None	None	None	None	None	Min	Min	None	Min	Min
Act Effct Green (s)	22.1	22.1	22.1	22.1	22.1	22.1	53.1	43.4	43.4	54.9	44.3	44.3
Actuated g/C Ratio	0.23	0.23	0.23	0.23	0.23	0.23	0.55	0.45	0.45	0.57	0.46	0.46
v/c Ratio	0.31	0.25	0.40	0.71	0.57	0.68	0.58	0.88	0.18	0.84	0.62	0.07
Control Delay	34.8	31.6	6.5	47.9	38.5	20.2	17.0	33.5	5.9	51.8	23.5	0.2
Queue Delay	0.0	0.0	0.0	0.0	0.0	0.0	0.0	0.0	0.0	0.0	0.0	0.0
Total Delay	34.8	31.6	6.5	47.9	38.5	20.2	17.0	33.5	5.9	51.8	23.5	0.2
LOS	C	C	A	D	D	C	B	C	A	D	C	A

Lane Group	EBL	EBT	EBR	WBL	WBT	WBR	NBL	NBT	NBR	SBL	SBT	SBR
Approach Delay		18.2			32.9			29.3			27.5	
Approach LOS		B			C			C			C	

Intersection Summary	
Area Type:	Other
Cycle Length: 110	
Actuated Cycle Length: 96.9	
Natural Cycle: 110	
Control Type: Actuated-Uncoordinated	
Maximum v/c Ratio: 0.88	
Intersection Signal Delay: 28.5	Intersection LOS: C
Intersection Capacity Utilization 90.0%	ICU Level of Service E
Analysis Period (min) 15	

Splits and Phases: 19: Belle Terre Pkwy & Royal Palms Pkwy

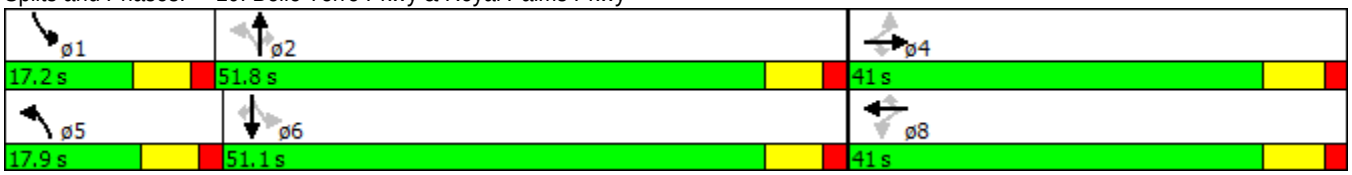

Intersection	
Int Delay, s/veh	2.2

Movement	WBL	WBR	NBT	NBR	SBL	SBT
Vol, veh/h	45	42	1660	71	48	1179
Conflicting Peds, #/hr	0	0	0	0	0	0
Sign Control	Stop	Stop	Free	Free	Free	Free
RT Channelized	-	None	-	None	-	None
Storage Length	0	-	-	250	350	-
Veh in Median Storage, #	1	-	0	-	-	0
Grade, %	0	-	0	-	-	0
Peak Hour Factor	95	95	95	95	95	95
Heavy Vehicles, %	0	0	2	2	2	2
Mvmt Flow	47	44	1747	75	51	1241

Major/Minor	Minor1		Major1		Major2	
Conflicting Flow All	2469	874	0	0	1747	0
Stage 1	1747	-	-	-	-	-
Stage 2	722	-	-	-	-	-
Critical Hdwy	6.8	6.9	-	-	4.14	-
Critical Hdwy Stg 1	5.8	-	-	-	-	-
Critical Hdwy Stg 2	5.8	-	-	-	-	-
Follow-up Hdwy	3.5	3.3	-	-	2.22	-
Pot Cap-1 Maneuver	~ 26	297	-	-	355	-
Stage 1	128	-	-	-	-	-
Stage 2	447	-	-	-	-	-
Platoon blocked, %			-	-		-
Mov Cap-1 Maneuver	~ 22	297	-	-	355	-
Mov Cap-2 Maneuver	95	-	-	-	-	-
Stage 1	128	-	-	-	-	-
Stage 2	383	-	-	-	-	-

Approach	WB	NB	SB
HCM Control Delay, s	68.6	0	0.7
HCM LOS	F		

Minor Lane/Major Mvmt	NBT	NBR	WBLn1	SBL	SBT
Capacity (veh/h)	-	-	141	355	-
HCM Lane V/C Ratio	-	-	0.649	0.142	-
HCM Control Delay (s)	-	-	68.6	16.8	-
HCM Lane LOS	-	-	F	C	-
HCM 95th %tile Q(veh)	-	-	3.5	0.5	-

Notes

~: Volume exceeds capacity $: Delay exceeds 300s +: Computation Not Defined *: All major volume in platoon

Lane Group	EBL	EBR	NBL	NBT	SBT	SBR
Lane Configurations						
Volume (vph)	161	222	373	1329	1005	205
Ideal Flow (vphpl)	1900	1900	1900	1900	1900	1900
Lane Width (ft)	12	12	12	12	12	12
Grade (%)	0%			0%	0%	
Storage Length (ft)	250	0	350			200
Storage Lanes	1	1	1			1
Taper Length (ft)	50		50			
Satd. Flow (prot)	1805	1599	1770	3539	3539	1583
Flt Permitted	0.950		0.115			
Satd. Flow (perm)	1805	1599	214	3539	3539	1583
Right Turn on Red		Yes				Yes
Satd. Flow (RTOR)		234				203
Link Speed (mph)	45			45	45	
Link Distance (ft)	1554			1428	1580	
Travel Time (s)	23.5			21.6	23.9	
Confl. Peds. (#/hr)						
Confl. Bikes (#/hr)						
Peak Hour Factor	0.95	0.95	0.95	0.95	0.95	0.95
Growth Factor	100%	100%	100%	100%	100%	100%
Heavy Vehicles (%)	0%	1%	2%	2%	2%	2%
Bus Blockages (#/hr)	0	0	0	0	0	0
Parking (#/hr)						
Mid-Block Traffic (%)	0%			0%	0%	
Shared Lane Traffic (%)						
Lane Group Flow (vph)	169	234	393	1399	1058	216
Turn Type	Prot	Prot	pm+pt	NA	NA	Perm
Protected Phases	8	8	1	6	2	
Permitted Phases			6			2
Detector Phase	8	8	1	6	2	2
Switch Phase						
Minimum Initial (s)	6.0	6.0	6.0	15.0	15.0	15.0
Minimum Split (s)	33.8	33.8	13.0	22.0	30.0	30.0
Total Split (s)	33.8	33.8	21.0	56.2	35.2	35.2
Total Split (%)	37.6%	37.6%	23.3%	62.4%	39.1%	39.1%
Yellow Time (s)	4.8	4.8	4.8	4.8	4.8	4.8
All-Red Time (s)	2.0	2.0	2.2	2.2	2.2	2.2
Lost Time Adjust (s)	0.0	0.0	0.0	0.0	0.0	0.0
Total Lost Time (s)	6.8	6.8	7.0	7.0	7.0	7.0
Lead/Lag			Lead		Lag	Lag
Lead-Lag Optimize?			Yes		Yes	Yes
Recall Mode	None	None	None	Min	Min	Min
Act Effct Green (s)	12.3	12.3	48.8	48.8	27.7	27.7
Actuated g/C Ratio	0.16	0.16	0.65	0.65	0.37	0.37
v/c Ratio	0.57	0.51	0.91	0.61	0.81	0.30
Control Delay	37.0	8.4	46.8	9.4	27.8	4.7
Queue Delay	0.0	0.0	0.0	0.0	0.0	0.0
Total Delay	37.0	8.4	46.8	9.4	27.8	4.7
LOS	D	A	D	A	C	A

Lane Group	EBL	EBR	NBL	NBT	SBT	SBR
Approach Delay	20.4			17.6	23.9	
Approach LOS	C			B	C	

Intersection Summary	
Area Type:	Other
Cycle Length: 90	
Actuated Cycle Length: 74.9	
Natural Cycle: 90	
Control Type: Actuated-Uncoordinated	
Maximum v/c Ratio: 0.91	
Intersection Signal Delay: 20.2	Intersection LOS: C
Intersection Capacity Utilization 74.7%	ICU Level of Service D
Analysis Period (min) 15	

Splits and Phases: 21: Belle Terre Pkwy & Rymfire Dr

Intersection	
Int Delay, s/veh	2.3

Movement	WBL	WBR	NBT	NBR	SBL	SBT
Vol, veh/h	45	57	1427	63	91	1165
Conflicting Peds, #/hr	0	0	0	0	0	0
Sign Control	Stop	Stop	Free	Free	Free	Free
RT Channelized	-	None	-	None	-	None
Storage Length	0	-	-	250	350	-
Veh in Median Storage, #	1	-	0	-	-	0
Grade, %	0	-	0	-	-	0
Peak Hour Factor	95	95	95	95	95	95
Heavy Vehicles, %	3	2	2	2	2	2
Mvmt Flow	47	60	1502	66	96	1226

Major/Minor	Minor1		Major1		Major2	
Conflicting Flow All	2307	751	0	0	1502	0
Stage 1	1502	-	-	-	-	-
Stage 2	805	-	-	-	-	-
Critical Hdwy	6.86	6.94	-	-	4.14	-
Critical Hdwy Stg 1	5.86	-	-	-	-	-
Critical Hdwy Stg 2	5.86	-	-	-	-	-
Follow-up Hdwy	3.53	3.32	-	-	2.22	-
Pot Cap-1 Maneuver	~ 32	353	-	-	442	-
Stage 1	169	-	-	-	-	-
Stage 2	398	-	-	-	-	-
Platoon blocked, %			-	-		-
Mov Cap-1 Maneuver	~ 25	353	-	-	442	-
Mov Cap-2 Maneuver	110	-	-	-	-	-
Stage 1	169	-	-	-	-	-
Stage 2	312	-	-	-	-	-

Approach	WB	NB	SB
HCM Control Delay, s	51.4	0	1.1
HCM LOS	F		

Minor Lane/Major Mvmt	NBT	NBR	WBLn1	SBL	SBT
Capacity (veh/h)	-	-	179	442	-
HCM Lane V/C Ratio	-	-	0.6	0.217	-
HCM Control Delay (s)	-	-	51.4	15.4	-
HCM Lane LOS	-	-	F	C	-
HCM 95th %tile Q(veh)	-	-	3.3	0.8	-

Notes

~: Volume exceeds capacity $: Delay exceeds 300s +: Computation Not Defined *: All major volume in platoon

Intersection	
Int Delay, s/veh	2.3

Movement	WBL	WBR	NBT	NBR	SBL	SBT
Vol, veh/h	0	193	1266	218	163	1256
Conflicting Peds, #/hr	0	0	0	0	0	0
Sign Control	Stop	Stop	Free	Free	Free	Free
RT Channelized	-	None	-	None	-	None
Storage Length	-	0	-	250	350	-
Veh in Median Storage, #	1	-	0	-	-	0
Grade, %	0	-	0	-	-	0
Peak Hour Factor	95	95	95	95	95	95
Heavy Vehicles, %	1	3	2	2	2	2
Mvmt Flow	0	203	1333	229	172	1322

Major/Minor	Minor1		Major1		Major2	
Conflicting Flow All	2337	666	0	0	1333	0
Stage 1	1333	-	-	-	-	-
Stage 2	1004	-	-	-	-	-
Critical Hdwy	6.82	6.96	-	-	4.14	-
Critical Hdwy Stg 1	5.82	-	-	-	-	-
Critical Hdwy Stg 2	5.82	-	-	-	-	-
Follow-up Hdwy	3.51	3.33	-	-	2.22	-
Pot Cap-1 Maneuver	31	400	-	-	513	-
Stage 1	212	-	-	-	-	-
Stage 2	317	-	-	-	-	-
Platoon blocked, %			-	-		-
Mov Cap-1 Maneuver	21	400	-	-	513	-
Mov Cap-2 Maneuver	106	-	-	-	-	-
Stage 1	212	-	-	-	-	-
Stage 2	211	-	-	-	-	-

Approach	WB	NB	SB
HCM Control Delay, s	22.9	0	1.8
HCM LOS	C		

Minor Lane/Major Mvmt	NBT	NBR	WBLn1	SBL	SBT
Capacity (veh/h)	-	-	400	513	-
HCM Lane V/C Ratio	-	-	0.508	0.334	-
HCM Control Delay (s)	-	-	22.9	15.5	-
HCM Lane LOS	-	-	C	C	-
HCM 95th %tile Q(veh)	-	-	2.8	1.5	-

Lane Group	EBL	EBT	EBR	WBL	WBT	WBR	NBU	NBL	NBT	NBR	SBL	SBT
Lane Configurations												
Volume (vph)	169	121	162	108	51	83	108	156	1031	164	112	1041
Ideal Flow (vphpl)	1900	1900	1900	1900	1900	1900	1900	1900	1900	1900	1900	1900
Lane Width (ft)	12	12	12	12	12	12	12	12	12	12	12	12
Grade (%)		0%			0%				0%			0%
Storage Length (ft)	325		0	225		0		350		325	250	
Storage Lanes	1		0	1		0		1		1	1	
Taper Length (ft)	50			50				50			50	
Satd. Flow (prot)	1805	1737	0	1805	1702	0	0	1770	3539	1583	1770	3539
Flt Permitted	0.503			0.417				0.950			0.950	
Satd. Flow (perm)	956	1737	0	792	1702	0	0	1770	3539	1583	1770	3539
Right Turn on Red			No			Yes				Yes		
Satd. Flow (RTOR)					70					185		
Link Speed (mph)		55			45				45			45
Link Distance (ft)		1756			1701				1132			1277
Travel Time (s)		21.8			25.8				17.2			19.3
Confl. Peds. (#/hr)												
Confl. Bikes (#/hr)												
Peak Hour Factor	0.95	0.95	0.95	0.95	0.95	0.95	0.95	0.95	0.95	0.95	0.95	0.95
Growth Factor	100%	100%	100%	100%	100%	100%	100%	100%	100%	100%	100%	100%
Heavy Vehicles (%)	0%	0%	0%	0%	0%	2%	2%	2%	2%	2%	2%	2%
Bus Blockages (#/hr)	0	0	0	0	0	0	0	0	0	0	0	0
Parking (#/hr)												
Mid-Block Traffic (%)		0%			0%				0%			0%
Shared Lane Traffic (%)												
Lane Group Flow (vph)	178	298	0	114	141	0	0	278	1085	173	118	1096
Turn Type	pm+pt	NA		pm+pt	NA		Prot	Prot	NA	Perm	Prot	NA
Protected Phases	3	8		7	4		5	5	2		1	6
Permitted Phases	8			4						2		
Detector Phase	3	8		7	4		5	5	2	2	1	6
Switch Phase												
Minimum Initial (s)	4.0	5.0		4.0	5.0		9.0	9.0	17.0	17.0	9.0	17.0
Minimum Split (s)	8.0	33.0		8.0	11.0		15.8	15.8	33.8	33.8	15.8	33.8
Total Split (s)	13.0	33.0		8.0	28.0		24.0	24.0	47.1	47.1	16.9	40.0
Total Split (%)	12.4%	31.4%		7.6%	26.7%		22.9%	22.9%	44.9%	44.9%	16.1%	38.1%
Yellow Time (s)	3.5	4.0		3.5	4.0		4.8	4.8	4.8	4.8	4.8	4.8
All-Red Time (s)	0.5	2.0		0.5	2.0		2.0	2.0	2.0	2.0	2.0	2.0
Lost Time Adjust (s)	0.0	0.0		0.0	0.0			0.0	0.0	0.0	0.0	0.0
Total Lost Time (s)	4.0	6.0		4.0	6.0			6.8	6.8	6.8	6.8	6.8
Lead/Lag	Lead	Lag		Lead	Lag		Lead	Lead	Lag	Lag	Lead	Lag
Lead-Lag Optimize?	Yes	Yes		Yes	Yes		Yes	Yes	Yes	Yes	Yes	Yes
Recall Mode	None	None		None	None		None	None	Min	Min	None	Min
Act Effct Green (s)	31.4	21.4		22.5	16.5			17.2	40.6	40.6	9.9	33.3
Actuated g/C Ratio	0.32	0.22		0.23	0.17			0.17	0.41	0.41	0.10	0.33
v/c Ratio	0.47	0.80		0.52	0.42			0.91	0.75	0.23	0.67	0.93
Control Delay	30.1	53.6		36.4	22.9			75.3	30.0	3.5	64.3	47.0
Queue Delay	0.0	0.0		0.0	0.0			0.0	0.0	0.0	0.0	0.0
Total Delay	30.1	53.6		36.4	22.9			75.3	30.0	3.5	64.3	47.0
LOS	C	D		D	C			E	C	A	E	D

Lane Group	SBR
Lane Configurations	
Volume (vph)	209
Ideal Flow (vphpl)	1900
Lane Width (ft)	12
Grade (%)	
Storage Length (ft)	325
Storage Lanes	1
Taper Length (ft)	
Satd. Flow (prot)	1583
Flt Permitted	
Satd. Flow (perm)	1583
Right Turn on Red	Yes
Satd. Flow (RTOR)	256
Link Speed (mph)	
Link Distance (ft)	
Travel Time (s)	
Confl. Peds. (#/hr)	
Confl. Bikes (#/hr)	
Peak Hour Factor	0.95
Growth Factor	100%
Heavy Vehicles (%)	2%
Bus Blockages (#/hr)	0
Parking (#/hr)	
Mid-Block Traffic (%)	
Shared Lane Traffic (%)	
Lane Group Flow (vph)	220
Turn Type	Perm
Protected Phases	
Permitted Phases	6
Detector Phase	6
Switch Phase	
Minimum Initial (s)	17.0
Minimum Split (s)	33.8
Total Split (s)	40.0
Total Split (%)	38.1%
Yellow Time (s)	4.8
All-Red Time (s)	2.0
Lost Time Adjust (s)	0.0
Total Lost Time (s)	6.8
Lead/Lag	Lag
Lead-Lag Optimize?	Yes
Recall Mode	Min
Act Effct Green (s)	33.3
Actuated g/C Ratio	0.33
v/c Ratio	0.31
Control Delay	3.2
Queue Delay	0.0
Total Delay	3.2
LOS	A

Lane Group	EBL	EBT	EBR	WBL	WBT	WBR	NBU	NBL	NBT	NBR	SBL	SBT
Approach Delay		44.8			28.9				35.2			41.7
Approach LOS		D			C				D			D

Intersection Summary	
Area Type:	Other
Cycle Length: 105	
Actuated Cycle Length: 99.5	
Natural Cycle: 105	
Control Type: Actuated-Uncoordinated	
Maximum v/c Ratio: 0.93	
Intersection Signal Delay: 38.5	Intersection LOS: D
Intersection Capacity Utilization 85.3%	ICU Level of Service E
Analysis Period (min) 15	

Splits and Phases: 24: Belle Terre Pkwy & Whiteview Pkwy

Intersection	
Int Delay, s/veh	2.3

Movement	EBL	EBR	NBL	NBT	SBT	SBR
Vol, veh/h	51	48	105	1178	1314	60
Conflicting Peds, #/hr	0	0	0	0	0	0
Sign Control	Stop	Stop	Free	Free	Free	Free
RT Channelized	-	None	-	None	-	None
Storage Length	0	-	175	-	-	250
Veh in Median Storage, #	1	-	-	0	0	-
Grade, %	0	-	-	0	0	-
Peak Hour Factor	95	95	95	95	95	95
Heavy Vehicles, %	0	3	2	2	2	2
Mvmt Flow	54	51	111	1240	1383	63

Major/Minor	Minor2		Major1		Major2	
Conflicting Flow All	2224	692	1383	0	-	0
Stage 1	1383	-	-	-	-	-
Stage 2	841	-	-	-	-	-
Critical Hdwy	6.8	6.96	4.14	-	-	-
Critical Hdwy Stg 1	5.8	-	-	-	-	-
Critical Hdwy Stg 2	5.8	-	-	-	-	-
Follow-up Hdwy	3.5	3.33	2.22	-	-	-
Pot Cap-1 Maneuver	~ 38	384	491	-	-	-
Stage 1	202	-	-	-	-	-
Stage 2	388	-	-	-	-	-
Platoon blocked, %				-	-	-
Mov Cap-1 Maneuver	~ 29	384	491	-	-	-
Mov Cap-2 Maneuver	123	-	-	-	-	-
Stage 1	202	-	-	-	-	-
Stage 2	300	-	-	-	-	-

Approach	EB	NB	SB
HCM Control Delay, s	47.9	1.2	0
HCM LOS	E		

Minor Lane/Major Mvmt	NBL	NBT	EBLn1	SBT	SBR
Capacity (veh/h)	491	-	183	-	-
HCM Lane V/C Ratio	0.225	-	0.569	-	-
HCM Control Delay (s)	14.4	-	47.9	-	-
HCM Lane LOS	B	-	E	-	-
HCM 95th %tile Q(veh)	0.9	-	3	-	-

Notes

~: Volume exceeds capacity $: Delay exceeds 300s +: Computation Not Defined *: All major volume in platoon

Intersection	
Int Delay, s/veh	3.2

Movement	WBL	WBR	NBT	NBR	SBL	SBT
Vol, veh/h	50	99	1137	92	154	1324
Conflicting Peds, #/hr	0	0	0	0	0	0
Sign Control	Stop	Stop	Free	Free	Free	Free
RT Channelized	-	None	-	None	-	None
Storage Length	0	-	-	250	175	-
Veh in Median Storage, #	1	-	0	-	-	0
Grade, %	0	-	0	-	-	0
Peak Hour Factor	95	95	95	95	95	95
Heavy Vehicles, %	0	1	2	2	2	2
Mvmt Flow	53	104	1197	97	162	1394

Major/Minor	Minor1		Major1		Major2	
Conflicting Flow All	2218	598	0	0	1197	0
Stage 1	1197	-	-	-	-	-
Stage 2	1021	-	-	-	-	-
Critical Hdwy	6.8	6.92	-	-	4.14	-
Critical Hdwy Stg 1	5.8	-	-	-	-	-
Critical Hdwy Stg 2	5.8	-	-	-	-	-
Follow-up Hdwy	3.5	3.31	-	-	2.22	-
Pot Cap-1 Maneuver	~ 38	448	-	-	579	-
Stage 1	253	-	-	-	-	-
Stage 2	313	-	-	-	-	-
Platoon blocked, %			-	-		-
Mov Cap-1 Maneuver	~ 27	448	-	-	579	-
Mov Cap-2 Maneuver	121	-	-	-	-	-
Stage 1	253	-	-	-	-	-
Stage 2	225	-	-	-	-	-

Approach	WB	NB	SB
HCM Control Delay, s	46.5	0	1.4
HCM LOS	E		

Minor Lane/Major Mvmt	NBT	NBR	WBLn1	SBL	SBT
Capacity (veh/h)	-	-	235	579	-
HCM Lane V/C Ratio	-	-	0.667	0.28	-
HCM Control Delay (s)	-	-	46.5	13.6	-
HCM Lane LOS	-	-	E	B	-
HCM 95th %tile Q(veh)	-	-	4.2	1.1	-

Notes

~: Volume exceeds capacity $: Delay exceeds 300s +: Computation Not Defined *: All major volume in platoon

Lane Group	WBL	WBR	NBT	NBR	SBL	SBT
Lane Configurations						
Volume (vph)	42	55	1186	50	25	1436
Ideal Flow (vphpl)	1900	1900	1900	1900	1900	1900
Lane Width (ft)	12	12	12	12	12	12
Grade (%)	0%		0%			0%
Storage Length (ft)	0	0		390	500	
Storage Lanes	1	1		1	1	
Taper Length (ft)	25				50	
Satd. Flow (prot)	1805	1615	3539	1583	1770	3539
Flt Permitted	0.950				0.148	
Satd. Flow (perm)	1805	1615	3539	1583	276	3539
Right Turn on Red		Yes		Yes		
Satd. Flow (RTOR)		58		53		
Link Speed (mph)	30		45			45
Link Distance (ft)	362		2373			662
Travel Time (s)	8.2		36.0			10.0
Confl. Peds. (#/hr)						
Confl. Bikes (#/hr)						
Peak Hour Factor	0.95	0.95	0.95	0.95	0.95	0.95
Growth Factor	100%	100%	100%	100%	100%	100%
Heavy Vehicles (%)	0%	0%	2%	2%	2%	2%
Bus Blockages (#/hr)	0	0	0	0	0	0
Parking (#/hr)						
Mid-Block Traffic (%)	0%		0%			0%
Shared Lane Traffic (%)						
Lane Group Flow (vph)	44	58	1248	53	26	1512
Turn Type	Prot	Prot	NA	Perm	pm+pt	NA
Protected Phases	4	4	6		5	2
Permitted Phases				6	2	
Detector Phase	4	4	6	6	5	2
Switch Phase						
Minimum Initial (s)	12.0	12.0	15.0	15.0	4.0	15.0
Minimum Split (s)	47.0	47.0	35.0	35.0	9.0	20.0
Total Split (s)	47.0	47.0	39.0	39.0	9.0	48.0
Total Split (%)	49.5%	49.5%	41.1%	41.1%	9.5%	50.5%
Yellow Time (s)	4.0	4.0	4.0	4.0	4.0	4.0
All-Red Time (s)	1.0	1.0	1.0	1.0	1.0	1.0
Lost Time Adjust (s)	0.0	0.0	0.0	0.0	0.0	0.0
Total Lost Time (s)	5.0	5.0	5.0	5.0	5.0	5.0
Lead/Lag			Lag	Lag	Lead	
Lead-Lag Optimize?			Yes	Yes	Yes	
Recall Mode	None	None	Min	Min	None	Min
Act Effct Green (s)	12.5	12.5	39.4	39.4	41.2	42.7
Actuated g/C Ratio	0.21	0.21	0.67	0.67	0.70	0.72
v/c Ratio	0.12	0.15	0.53	0.05	0.09	0.59
Control Delay	22.6	8.4	9.3	2.7	4.5	7.1
Queue Delay	0.0	0.0	0.0	0.0	0.0	0.0
Total Delay	22.6	8.4	9.3	2.7	4.5	7.1
LOS	C	A	A	A	A	A

Lane Group	WBL	WBR	NBT	NBR	SBL	SBT
Approach Delay	14.5		9.0			7.1
Approach LOS	B		A			A

Intersection Summary	
Area Type: Other	
Cycle Length: 95	
Actuated Cycle Length: 59	
Natural Cycle: 95	
Control Type: Actuated-Uncoordinated	
Maximum v/c Ratio: 0.59	
Intersection Signal Delay: 8.2	Intersection LOS: A
Intersection Capacity Utilization 58.0%	ICU Level of Service B
Analysis Period (min) 15	

Splits and Phases: 27: Belle Terre Pkwy & School Entrance

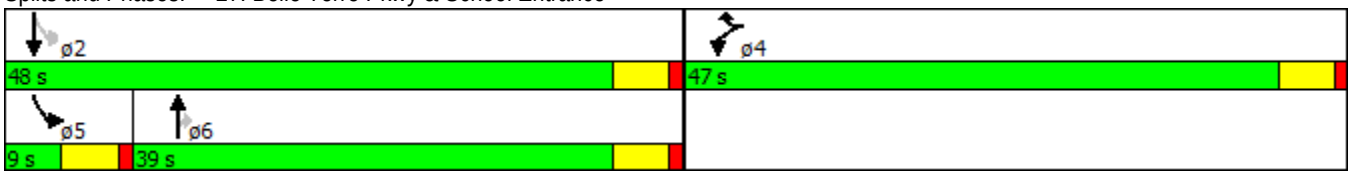

Lane Group	WBL	WBR	NBT	NBR	SBL	SBT	ø4
Lane Configurations							
Volume (vph)	210	149	1012	229	170	1251	
Ideal Flow (vphpl)	1900	1900	1900	1900	1900	1900	
Lane Width (ft)	12	12	12	12	12	12	
Grade (%)	0%		0%			0%	
Storage Length (ft)	275	0		0	175		
Storage Lanes	1	1		0	1		
Taper Length (ft)	25				50		
Satd. Flow (prot)	1787	1615	3440	0	1770	3539	
Flt Permitted	0.950				0.115		
Satd. Flow (perm)	1787	1615	3440	0	214	3539	
Right Turn on Red		Yes		Yes			
Satd. Flow (RTOR)		157	22				
Link Speed (mph)	30		45			45	
Link Distance (ft)	890		234			3685	
Travel Time (s)	20.2		3.5			55.8	
Confl. Peds. (#/hr)							
Confl. Bikes (#/hr)							
Peak Hour Factor	0.95	0.95	0.95	0.95	0.95	0.95	
Growth Factor	100%	100%	100%	100%	100%	100%	
Heavy Vehicles (%)	1%	0%	2%	2%	2%	2%	
Bus Blockages (#/hr)	0	0	0	0	0	0	
Parking (#/hr)							
Mid-Block Traffic (%)	0%		0%			0%	
Shared Lane Traffic (%)							
Lane Group Flow (vph)	221	157	1306	0	179	1317	
Turn Type	Prot	Prot	NA		pm+pt	NA	
Protected Phases	3	3	6		5	2	4
Permitted Phases					2		
Detector Phase	3	3	6		5	2	
Switch Phase							
Minimum Initial (s)	4.0	4.0	10.0		4.0	10.0	1.0
Minimum Split (s)	9.0	9.0	47.0		8.0	15.0	47.0
Total Split (s)	22.0	22.0	53.0		13.0	66.0	47.0
Total Split (%)	16.3%	16.3%	39.3%		9.6%	48.9%	35%
Yellow Time (s)	4.0	4.0	4.0		3.0	4.0	4.0
All-Red Time (s)	1.0	1.0	1.0		1.0	1.0	1.0
Lost Time Adjust (s)	0.0	0.0	0.0		0.0	0.0	
Total Lost Time (s)	5.0	5.0	5.0		4.0	5.0	
Lead/Lag	Lead	Lead	Lag		Lead		Lag
Lead-Lag Optimize?	Yes	Yes	Yes		Yes		Yes
Recall Mode	None	None	Max		None	Max	None
Act Effct Green (s)	17.0	17.0	48.0		62.0	61.0	
Actuated g/C Ratio	0.19	0.19	0.55		0.70	0.69	
v/c Ratio	0.64	0.36	0.69		0.58	0.54	
Control Delay	42.2	7.9	16.8		15.4	7.6	
Queue Delay	0.0	0.0	0.0		0.0	0.0	
Total Delay	42.2	7.9	16.8		15.4	7.6	
LOS	D	A	B		B	A	

Lane Group	WBL	WBR	NBT	NBR	SBL	SBT	ø4
Approach Delay	28.0		16.8			8.5	
Approach LOS	C		B			A	

Intersection Summary	
Area Type:	Other
Cycle Length: 135	
Actuated Cycle Length: 88	
Natural Cycle: 135	
Control Type: Semi Act-Uncoord	
Maximum v/c Ratio: 0.69	
Intersection Signal Delay: 14.2	Intersection LOS: B
Intersection Capacity Utilization 68.0%	ICU Level of Service C
Analysis Period (min) 15	

Splits and Phases: 28: Belle Terre Pkwy & Parkview Dr (S)

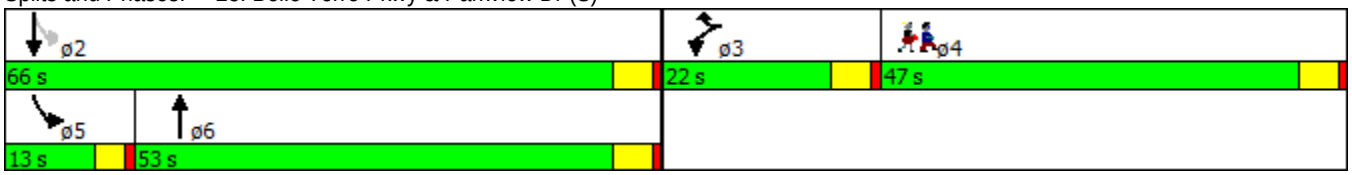

Intersection	
Int Delay, s/veh	3.2

Movement	SEL	SET	NWT	NWR	SWL	SWR
Vol, veh/h	192	1385	1143	35	36	118
Conflicting Peds, #/hr	0	0	0	0	0	0
Sign Control	Free	Free	Free	Free	Stop	Stop
RT Channelized	-	None	-	None	-	None
Storage Length	450	-	-	425	0	-
Veh in Median Storage, #	-	0	0	-	1	-
Grade, %	-	0	0	-	0	-
Peak Hour Factor	95	95	95	95	95	95
Heavy Vehicles, %	0	0	2	2	2	2
Mvmt Flow	202	1458	1203	18	38	124

Major/Minor	Major1		Major2		Minor2	
Conflicting Flow All	1203	0	-	0	2336	602
Stage 1	-	-	-	-	1203	-
Stage 2	-	-	-	-	1133	-
Critical Hdwy	4.1	-	-	-	6.84	6.94
Critical Hdwy Stg 1	-	-	-	-	5.84	-
Critical Hdwy Stg 2	-	-	-	-	5.84	-
Follow-up Hdwy	2.2	-	-	-	3.52	3.32
Pot Cap-1 Maneuver	587	-	-	-	~ 31	443
Stage 1	-	-	-	-	247	-
Stage 2	-	-	-	-	269	-
Platoon blocked, %		-	-	-		
Mov Cap-1 Maneuver	587	-	-	-	~ 20	443
Mov Cap-2 Maneuver	-	-	-	-	103	-
Stage 1	-	-	-	-	247	-
Stage 2	-	-	-	-	176	-

Approach	SE	NW	SW
HCM Control Delay, s	1.7	0	42.6
HCM LOS			E

Minor Lane/Major Mvmt	NWT	NWR	SEL	SETSWLn1	
Capacity (veh/h)	-	-	587	-	250
HCM Lane V/C Ratio	-	-	0.344	-	0.648
HCM Control Delay (s)	-	-	14.3	-	42.6
HCM Lane LOS	-	-	B	-	E
HCM 95th %tile Q(veh)	-	-	1.5	-	4

Notes

~: Volume exceeds capacity $: Delay exceeds 300s +: Computation Not Defined *: All major volume in platoon

Lane Group	SET	SER	NWL	NWT	NEL	NER
Lane Configurations						
Volume (vph)	1462	515	196	1065	450	115
Ideal Flow (vphpl)	1900	1900	1900	1900	1900	1900
Lane Width (ft)	12	12	12	12	12	12
Grade (%)	0%			0%	0%	
Storage Length (ft)		325	175		225	225
Storage Lanes		1	1		1	1
Taper Length (ft)			100		100	
Satd. Flow (prot)	3574	1599	1770	3539	3433	1583
Flt Permitted			0.088		0.950	
Satd. Flow (perm)	3574	1599	164	3539	3433	1583
Right Turn on Red		Yes				Yes
Satd. Flow (RTOR)		542				121
Link Speed (mph)	45			45	45	
Link Distance (ft)	1316			361	1297	
Travel Time (s)	19.9			5.5	19.7	
Confl. Peds. (#/hr)						
Confl. Bikes (#/hr)						
Peak Hour Factor	0.95	0.95	0.95	0.95	0.95	0.95
Growth Factor	100%	100%	100%	100%	100%	100%
Heavy Vehicles (%)	1%	1%	2%	2%	2%	2%
Bus Blockages (#/hr)	0	0	0	0	0	0
Parking (#/hr)						
Mid-Block Traffic (%)	0%			0%	0%	
Shared Lane Traffic (%)						
Lane Group Flow (vph)	1539	542	206	1121	474	121
Turn Type	NA	Perm	pm+pt	NA	Prot	Prot
Protected Phases	6		5	2	4	4
Permitted Phases		6	2			
Detector Phase	6	6	5	2	4	4
Switch Phase						
Minimum Initial (s)	20.0	20.0	4.0	20.0	6.0	6.0
Minimum Split (s)	26.8	26.8	11.0	27.0	31.8	31.8
Total Split (s)	45.2	45.2	13.0	58.2	31.8	31.8
Total Split (%)	50.2%	50.2%	14.4%	64.7%	35.3%	35.3%
Yellow Time (s)	4.8	4.8	4.8	4.8	4.8	4.8
All-Red Time (s)	2.0	2.0	2.2	2.2	2.0	2.0
Lost Time Adjust (s)	0.0	0.0	0.0	0.0	0.0	0.0
Total Lost Time (s)	6.8	6.8	7.0	7.0	6.8	6.8
Lead/Lag	Lag	Lag	Lead			
Lead-Lag Optimize?	Yes	Yes	Yes			
Recall Mode	Min	Min	None	Min	None	None
Act Effct Green (s)	38.5	38.5	51.3	51.3	16.5	16.5
Actuated g/C Ratio	0.47	0.47	0.63	0.63	0.20	0.20
v/c Ratio	0.91	0.52	0.93	0.50	0.68	0.29
Control Delay	30.8	3.4	64.6	9.7	35.5	7.4
Queue Delay	0.0	0.0	0.0	0.0	0.0	0.0
Total Delay	30.8	3.4	64.6	9.7	35.5	7.4
LOS	C	A	E	A	D	A

Lane Group	SET	SER	NWL	NWT	NEL	NER
Approach Delay	23.7			18.2	29.8	
Approach LOS	C			B	C	

Intersection Summary	
Area Type:	Other
Cycle Length: 90	
Actuated Cycle Length: 81.6	
Natural Cycle: 90	
Control Type: Actuated-Uncoordinated	
Maximum v/c Ratio: 0.93	
Intersection Signal Delay: 22.8	Intersection LOS: C
Intersection Capacity Utilization 81.3%	ICU Level of Service D
Analysis Period (min) 15	

Splits and Phases: 30: Pine Lakes Pkwy & Belle Terre Pkwy

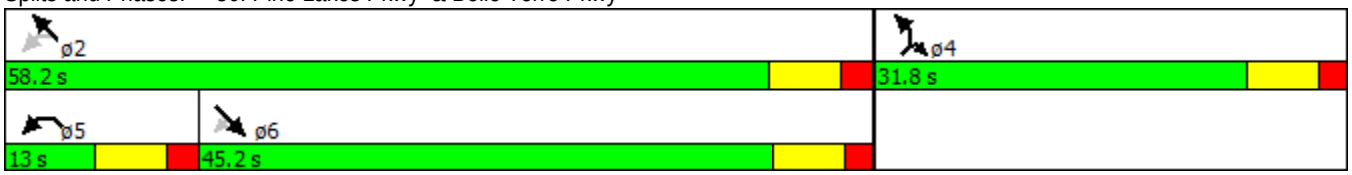

Appendix Q

Conceptual Signing Plan

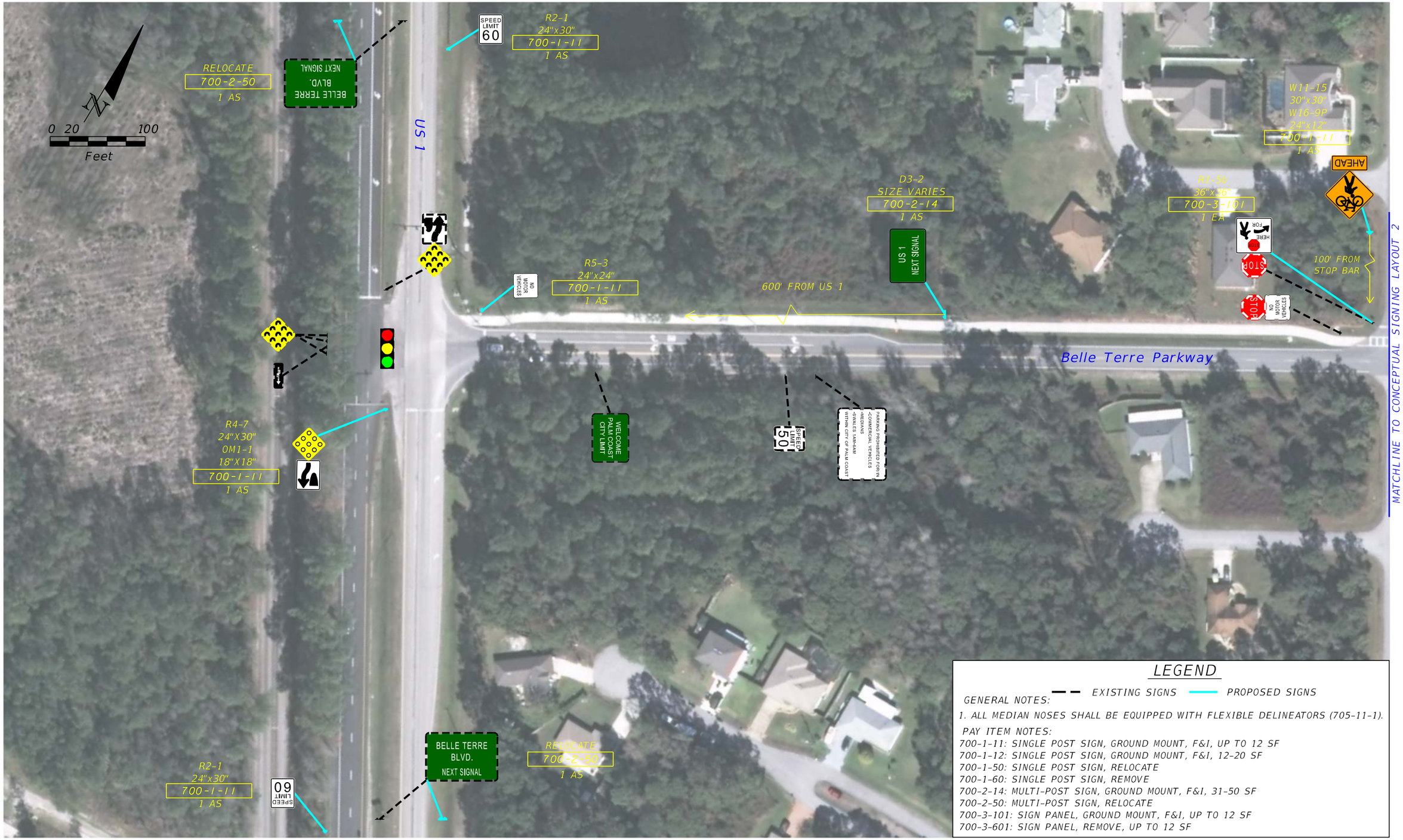

LEGEND

GENERAL NOTES: — — EXISTING SIGNS —— PROPOSED SIGNS

1. ALL MEDIAN NOSES SHALL BE EQUIPPED WITH FLEXIBLE DELINEATORS (705-11-1).

PAY ITEM NOTES:

700-1-11: SINGLE POST SIGN, GROUND MOUNT, F&I, UP TO 12 SF
700-1-12: SINGLE POST SIGN, GROUND MOUNT, F&I, 12-20 SF
700-1-50: SINGLE POST SIGN, RELOCATE
700-1-60: SINGLE POST SIGN, REMOVE
700-2-14: MULTI-POST SIGN, GROUND MOUNT, F&I, 31-50 SF
700-2-50: MULTI-POST SIGN, RELOCATE
700-3-101: SIGN PANEL, GROUND MOUNT, F&I, UP TO 12 SF
700-3-601: SIGN PANEL, REMOVE, UP TO 12 SF

LAYOUT 1

vhb CONCEPTUAL SIGNING PLAN

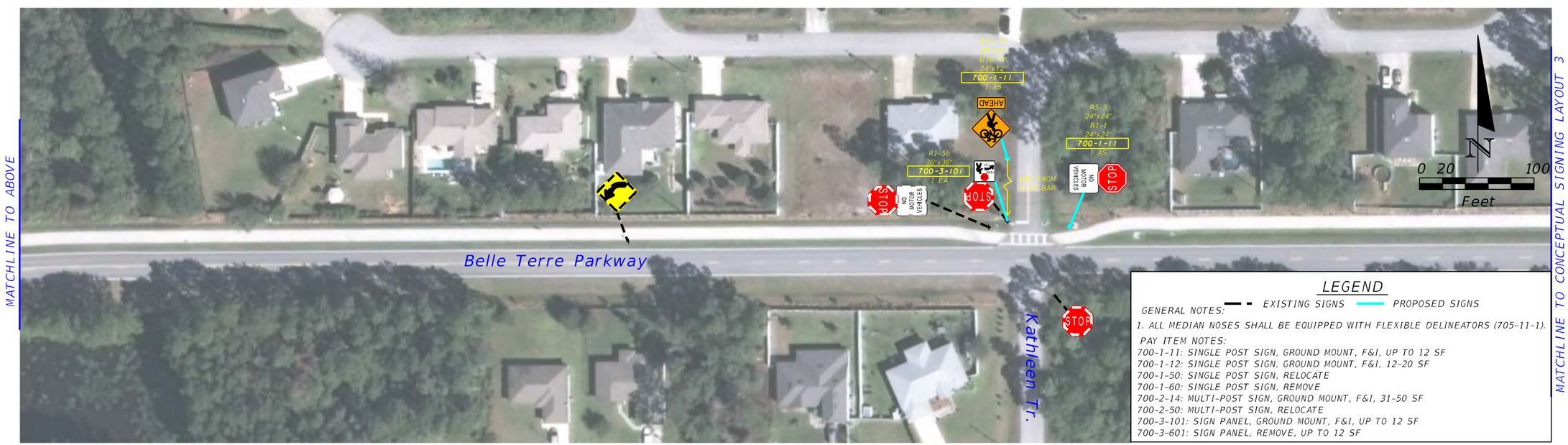

LAYOUT 2

vhb

CONCEPTUAL SIGNING PLAN

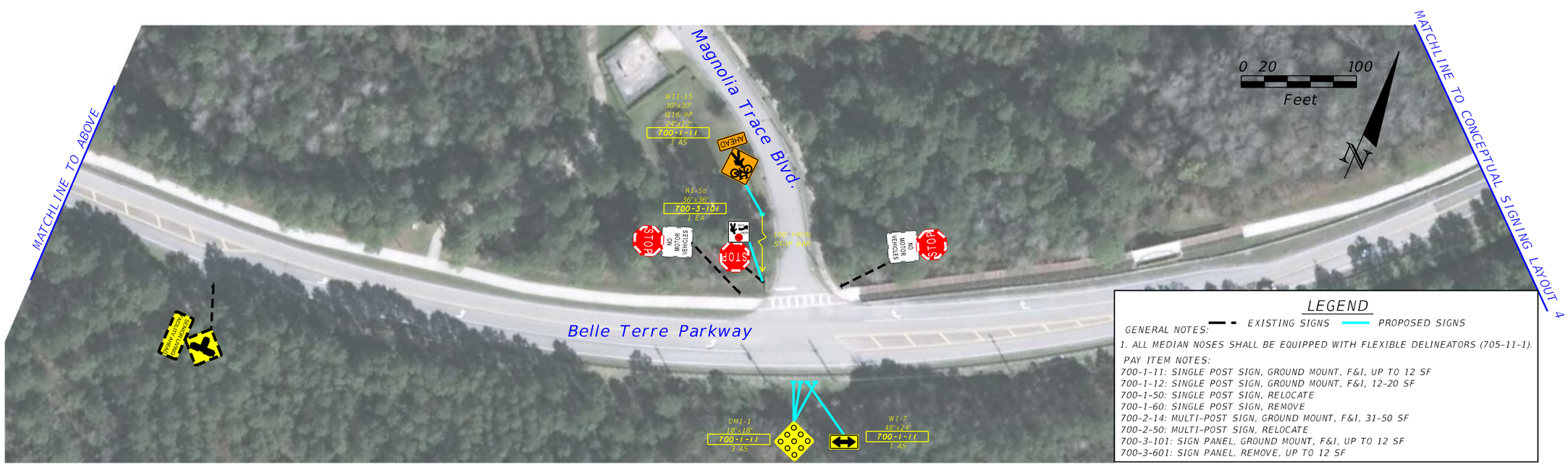

LAYOUT 3

vhb

CONCEPTUAL SIGNING PLAN

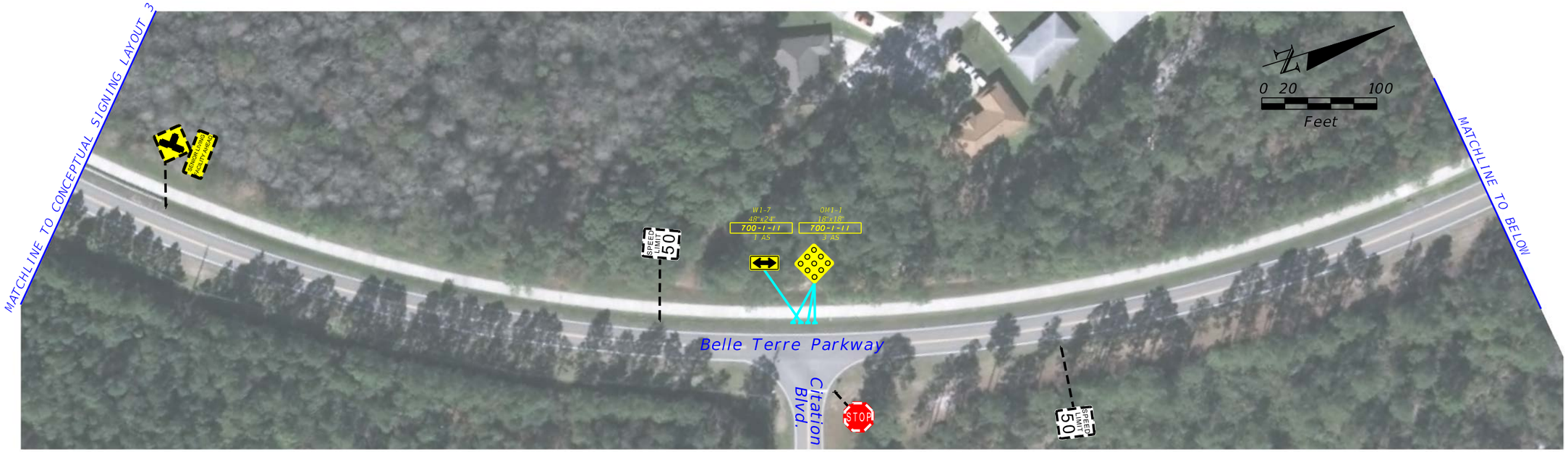

LEGEND

GENERAL NOTES: EXISTING SIGNS PROPOSED SIGNS

1. ALL MEDIAN NOSES SHALL BE EQUIPPED WITH FLEXIBLE DELINEATORS (705-11-1).

PAY ITEM NOTES:

700-1-11: SINGLE POST SIGN, GROUND MOUNT, F&I, UP TO 12 SF
700-1-12: SINGLE POST SIGN, GROUND MOUNT, F&I, 12-20 SF
700-1-50: SINGLE POST SIGN, RELOCATE
700-1-60: SINGLE POST SIGN, REMOVE
700-2-14: MULTI-POST SIGN, GROUND MOUNT, F&I, 31-50 SF
700-2-50: MULTI-POST SIGN, RELOCATE
700-3-101: SIGN PANEL, GROUND MOUNT, F&I, UP TO 12 SF
700-3-601: SIGN PANEL, REMOVE, UP TO 12 SF

LAYOUT 4

vhb CONCEPTUAL SIGNING PLAN

LEGEND

GENERAL NOTES: EXISTING SIGNS PROPOSED SIGNS

1. ALL MEDIAN NOSES SHALL BE EQUIPPED WITH FLEXIBLE DELINEATORS (705-11-1).

PAY ITEM NOTES:

700-1-11: SINGLE POST SIGN, GROUND MOUNT, F&I, UP TO 12 SF
700-1-12: SINGLE POST SIGN, GROUND MOUNT, F&I, 12-20 SF
700-1-50: SINGLE POST SIGN, RELOCATE
700-1-60: SINGLE POST SIGN, REMOVE
700-2-14: MULTI-POST SIGN, GROUND MOUNT, F&I, 31-50 SF
700-2-50: MULTI-POST SIGN, RELOCATE
700-3-101: SIGN PANEL, GROUND MOUNT, F&I, UP TO 12 SF
700-3-601: SIGN PANEL, REMOVE, UP TO 12 SF

LAYOUT 5

vhb

CONCEPTUAL SIGNING PLAN

MATCHLINE TO CONCEPTUAL SIGNING LAYOUT 5

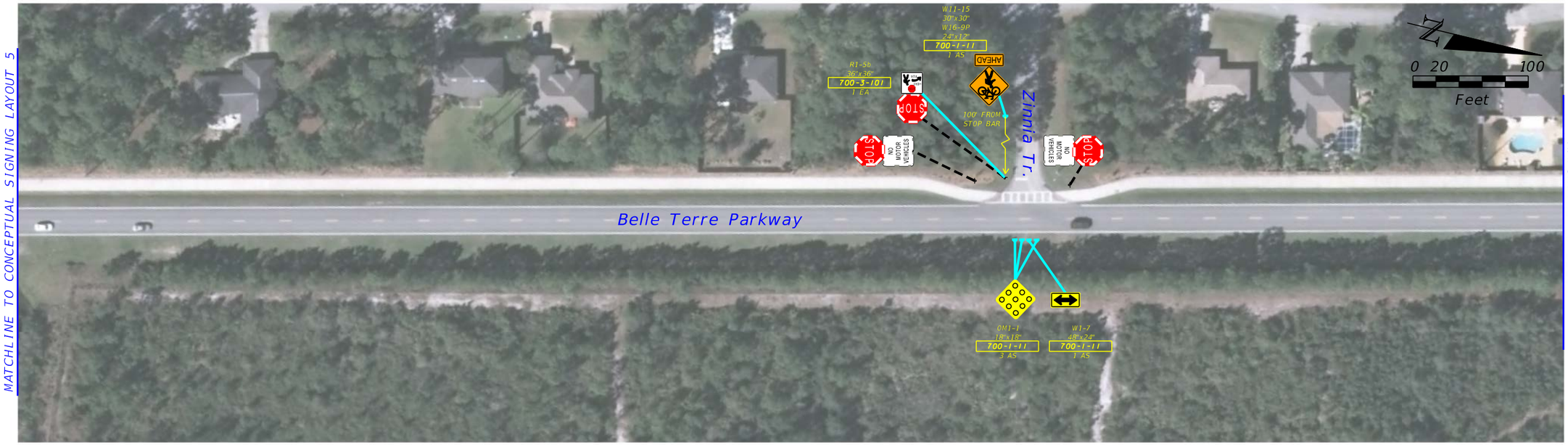

MATCHLINE TO BELOW

MATCHLINE TO ABOVE

MATCHLINE TO CONCEPTUAL SIGNING LAYOUT 7

LEGEND

GENERAL NOTES: EXISTING SIGNS PROPOSED SIGNS

1. ALL MEDIAN NOSES SHALL BE EQUIPPED WITH FLEXIBLE DELINEATORS (705-11-1).

PAY ITEM NOTES:

700-1-11: SINGLE POST SIGN, GROUND MOUNT, F&I, UP TO 12 SF
700-1-12: SINGLE POST SIGN, GROUND MOUNT, F&I, 12-20 SF
700-1-50: SINGLE POST SIGN, RELOCATE
700-1-60: SINGLE POST SIGN, REMOVE
700-2-14: MULTI-POST SIGN, GROUND MOUNT, F&I, 31-50 SF
700-2-50: MULTI-POST SIGN, RELOCATE
700-3-101: SIGN PANEL, GROUND MOUNT, F&I, UP TO 12 SF
700-3-601: SIGN PANEL, REMOVE, UP TO 12 SF

vhb

CONCEPTUAL SIGNING PLAN

LAYOUT 7

vhb

CONCEPTUAL SIGNING PLAN

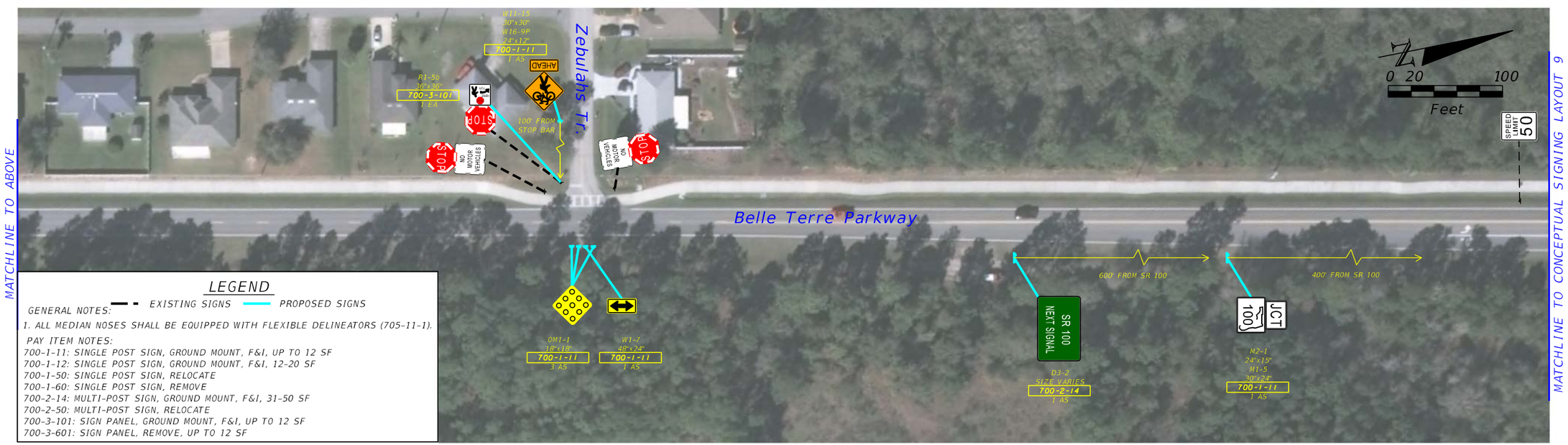

LEGEND

GENERAL NOTES: EXISTING SIGNS PROPOSED SIGNS

1. ALL MEDIAN NOSES SHALL BE EQUIPPED WITH FLEXIBLE DELINEATORS (705-11-1).

PAY ITEM NOTES:

700-1-11: SINGLE POST SIGN, GROUND MOUNT, F&I, UP TO 12 SF
700-1-12: SINGLE POST SIGN, GROUND MOUNT, F&I, 12-20 SF
700-1-50: SINGLE POST SIGN, RELOCATE
700-1-60: SINGLE POST SIGN, REMOVE
700-2-14: MULTI-POST SIGN, GROUND MOUNT, F&I, 31-50 SF
700-2-50: MULTI-POST SIGN, RELOCATE
700-3-101: SIGN PANEL, GROUND MOUNT, F&I, UP TO 12 SF
700-3-601: SIGN PANEL, REMOVE, UP TO 12 SF

LAYOUT 8

vhb

CONCEPTUAL SIGNING PLAN

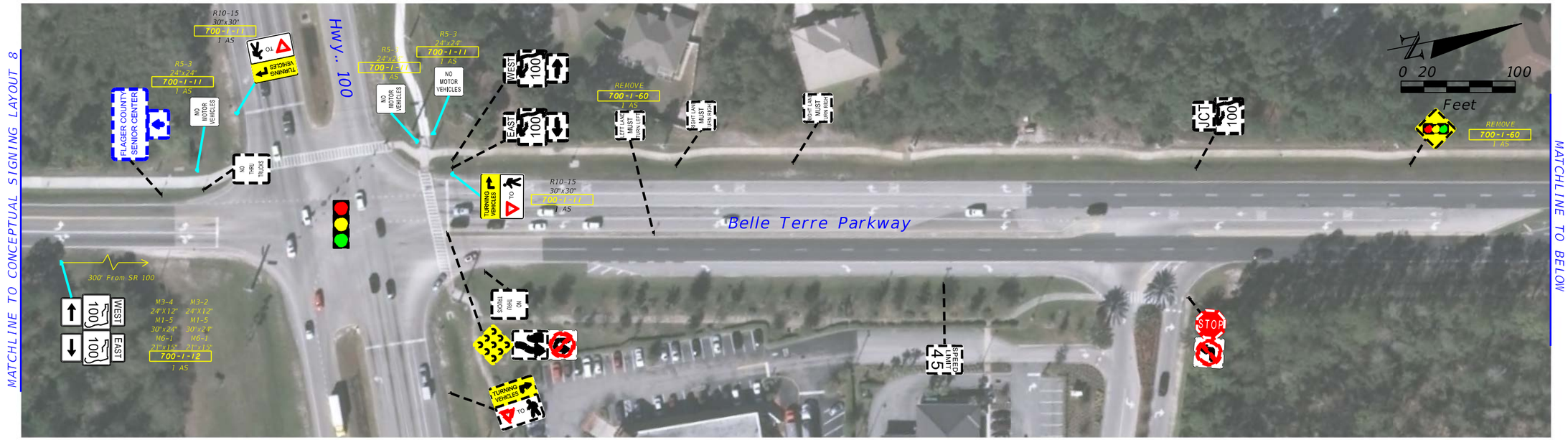

LEGEND

GENERAL NOTES: EXISTING SIGNS PROPOSED SIGNS

1. ALL MEDIAN NOSES SHALL BE EQUIPPED WITH FLEXIBLE DELINEATORS (705-11-1).

PAY ITEM NOTES:

700-1-11: SINGLE POST SIGN, GROUND MOUNT, F&I, UP TO 12 SF
700-1-12: SINGLE POST SIGN, GROUND MOUNT, F&I, 12-20 SF
700-1-50: SINGLE POST SIGN, RELOCATE
700-1-60: SINGLE POST SIGN, REMOVE
700-2-14: MULTI-POST SIGN, GROUND MOUNT, F&I, 31-50 SF
700-2-50: MULTI-POST SIGN, RELOCATE
700-3-101: SIGN PANEL, GROUND MOUNT, F&I, UP TO 12 SF
700-3-601: SIGN PANEL, REMOVE, UP TO 12 SF

vhb CONCEPTUAL SIGNING PLAN

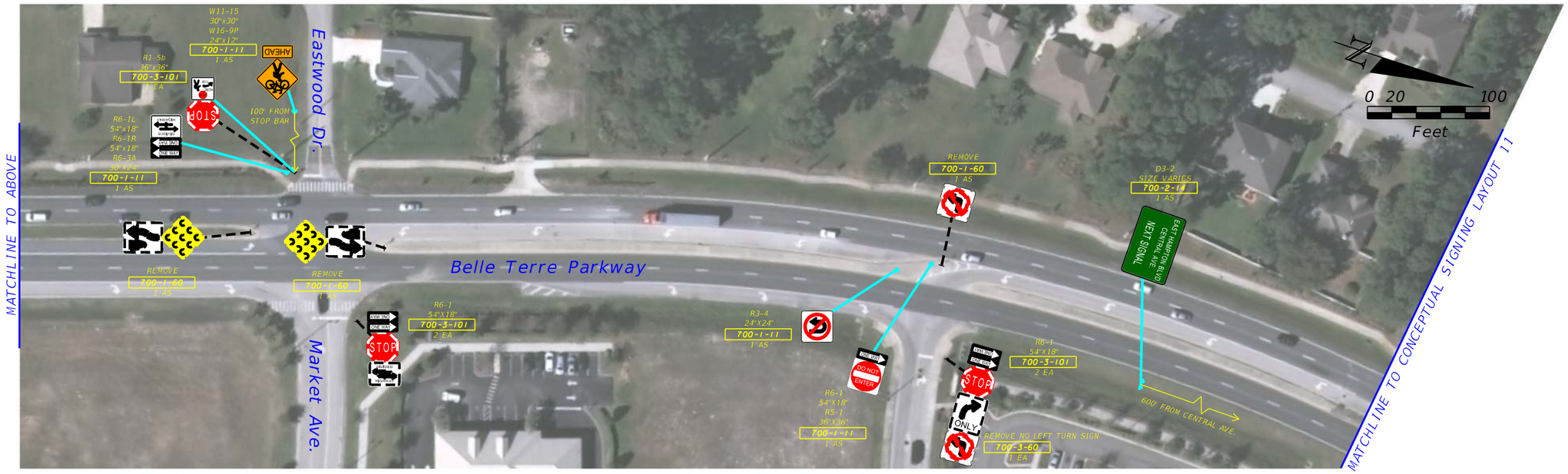

LAYOUT 10

vhb

CONCEPTUAL SIGNING PLAN

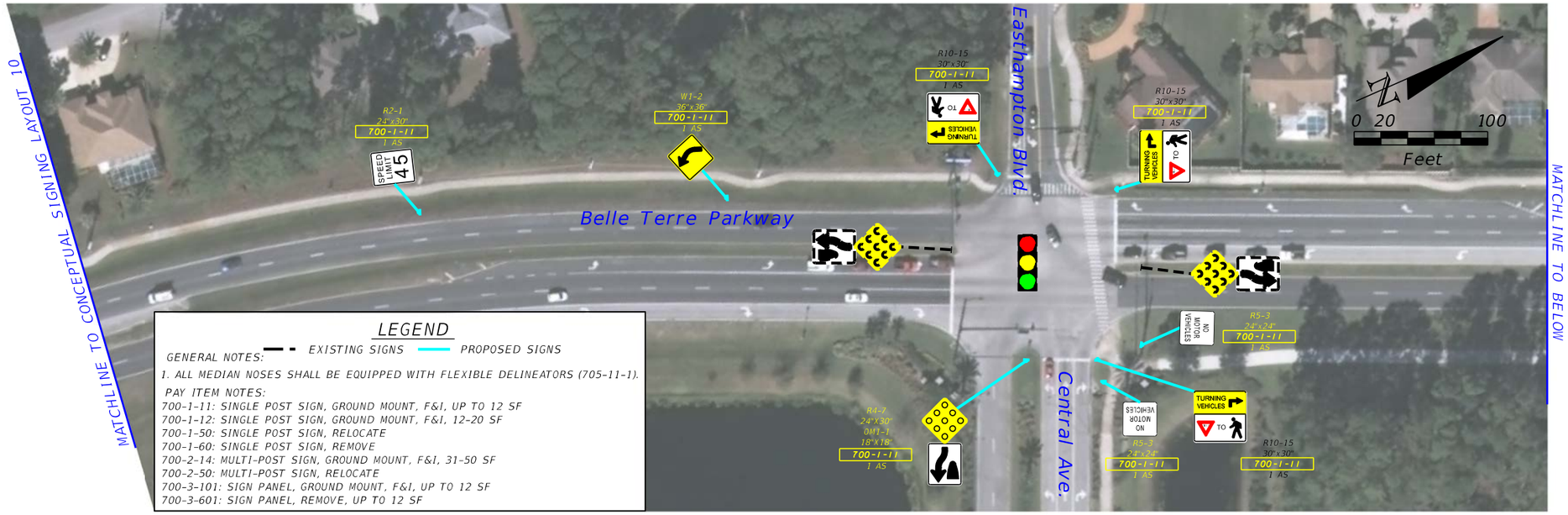

LEGEND

GENERAL NOTES: EXISTING SIGNS PROPOSED SIGNS

1. ALL MEDIAN NOSES SHALL BE EQUIPPED WITH FLEXIBLE DELINEATORS (705-11-1).

PAY ITEM NOTES:

700-1-11: SINGLE POST SIGN, GROUND MOUNT, F&I, UP TO 12 SF
700-1-12: SINGLE POST SIGN, GROUND MOUNT, F&I, 12-20 SF
700-1-50: SINGLE POST SIGN, RELOCATE
700-1-60: SINGLE POST SIGN, REMOVE
700-2-14: MULTI-POST SIGN, GROUND MOUNT, F&I, 31-50 SF
700-2-50: MULTI-POST SIGN, RELOCATE
700-3-101: SIGN PANEL, GROUND MOUNT, F&I, UP TO 12 SF
700-3-601: SIGN PANEL, REMOVE, UP TO 12 SF

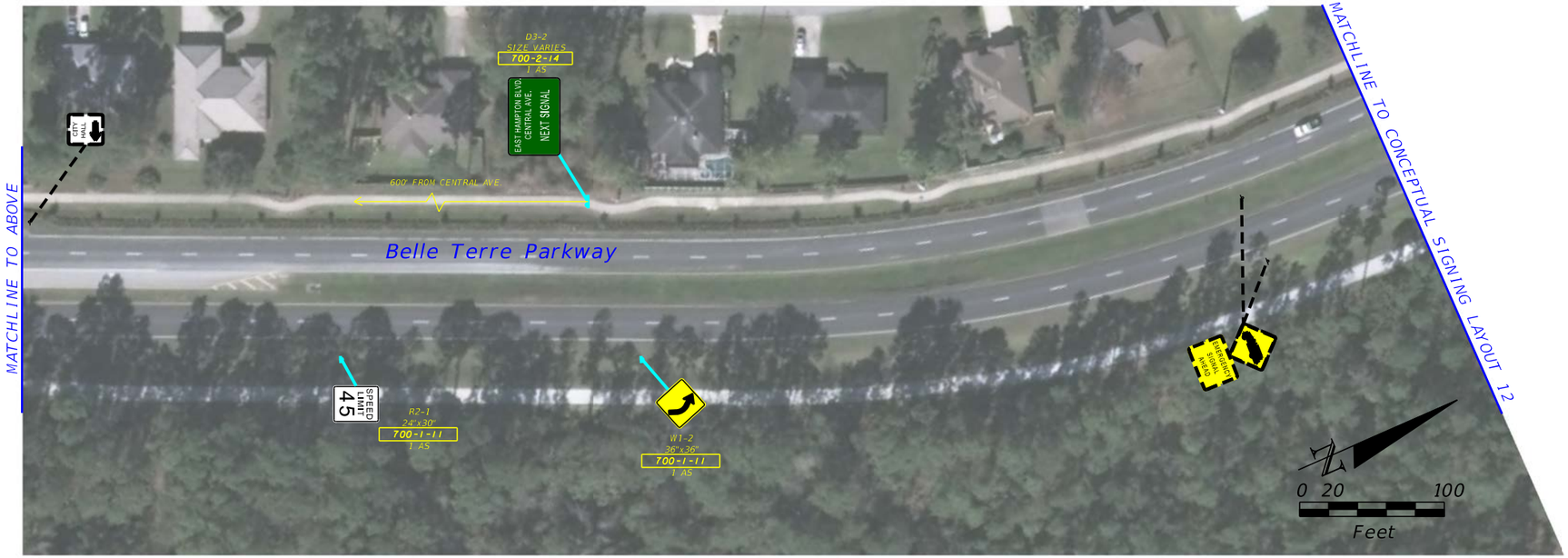

LAYOUT 11

vhb

CONCEPTUAL SIGNING PLAN

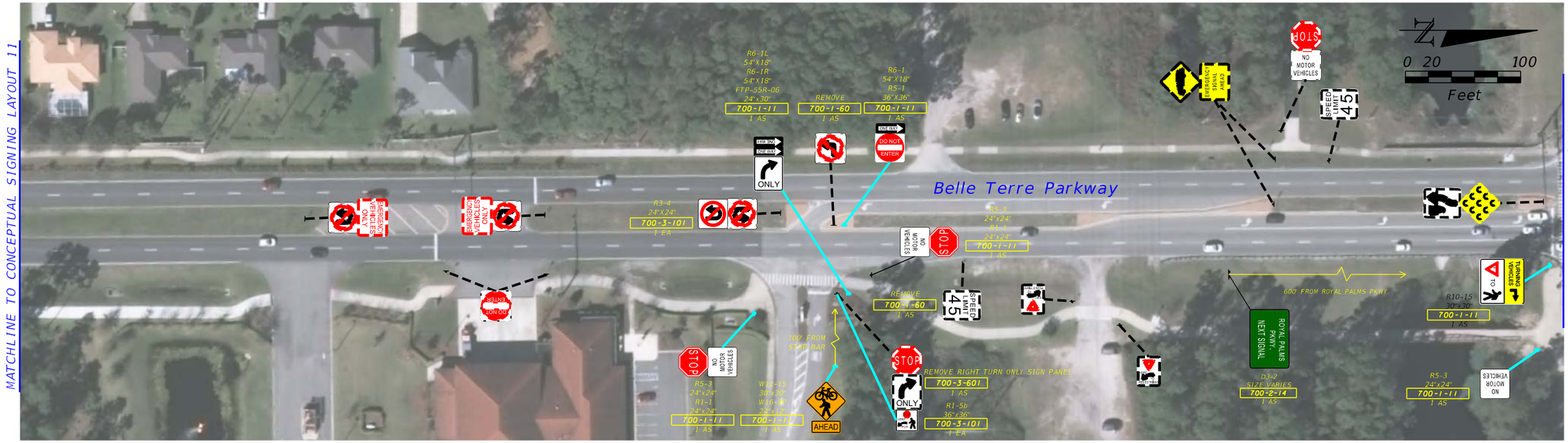

LAYOUT 12

vhb

CONCEPTUAL SIGNING PLAN

LEGEND

GENERAL NOTES: EXISTING SIGNS PROPOSED SIGNS

1. ALL MEDIAN NOSES SHALL BE EQUIPPED WITH FLEXIBLE DELINEATORS (705-11-1).

PAY ITEM NOTES:

700-1-11: SINGLE POST SIGN, GROUND MOUNT, F&I, UP TO 12 SF
700-1-12: SINGLE POST SIGN, GROUND MOUNT, F&I, 12-20 SF
700-1-50: SINGLE POST SIGN, RELOCATE
700-1-60: SINGLE POST SIGN, REMOVE
700-2-14: MULTI-POST SIGN, GROUND MOUNT, F&I, 31-50 SF
700-2-50: MULTI-POST SIGN, RELOCATE
700-3-101: SIGN PANEL, GROUND MOUNT, F&I, UP TO 12 SF
700-3-601: SIGN PANEL, REMOVE, UP TO 12 SF

vhb

CONCEPTUAL SIGNING PLAN

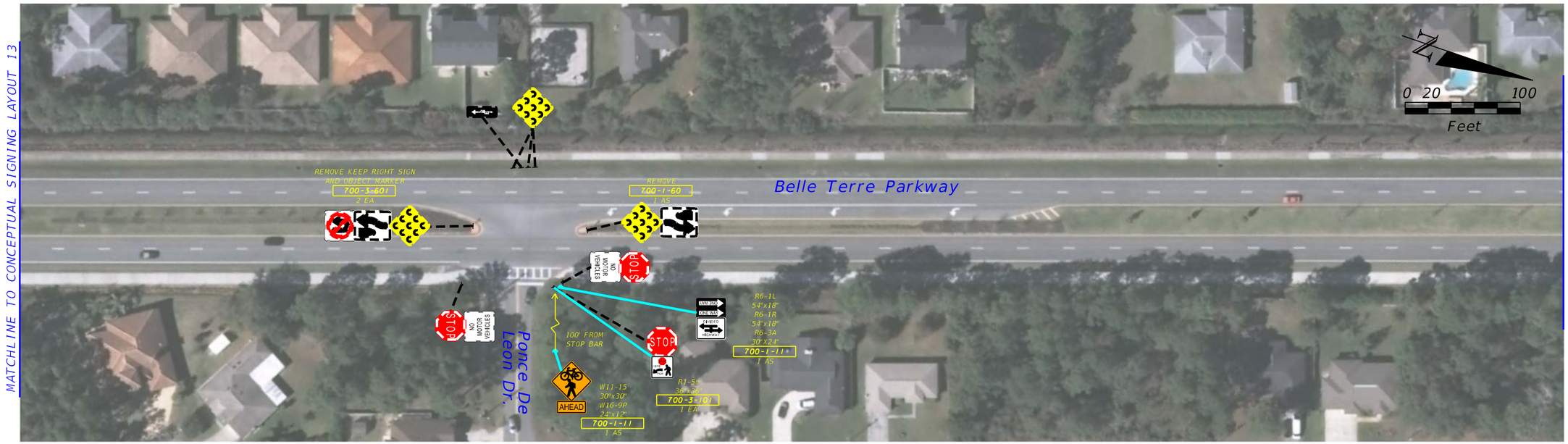

LEGEND

GENERAL NOTES: EXISTING SIGNS PROPOSED SIGNS

1. ALL MEDIAN NOSES SHALL BE EQUIPPED WITH FLEXIBLE DELINEATORS (705-11-1).

PAY ITEM NOTES:

700-1-11: SINGLE POST SIGN, GROUND MOUNT, F&I, UP TO 12 SF
700-1-12: SINGLE POST SIGN, GROUND MOUNT, F&I, 12-20 SF
700-1-50: SINGLE POST SIGN, RELOCATE
700-1-60: SINGLE POST SIGN, REMOVE
700-2-14: MULTI-POST SIGN, GROUND MOUNT, F&I, 31-50 SF
700-2-50: MULTI-POST SIGN, RELOCATE
700-3-101: SIGN PANEL, GROUND MOUNT, F&I, UP TO 12 SF
700-3-601: SIGN PANEL, REMOVE, UP TO 12 SF

vhb CONCEPTUAL SIGNING PLAN

vhb CONCEPTUAL SIGNING PLAN

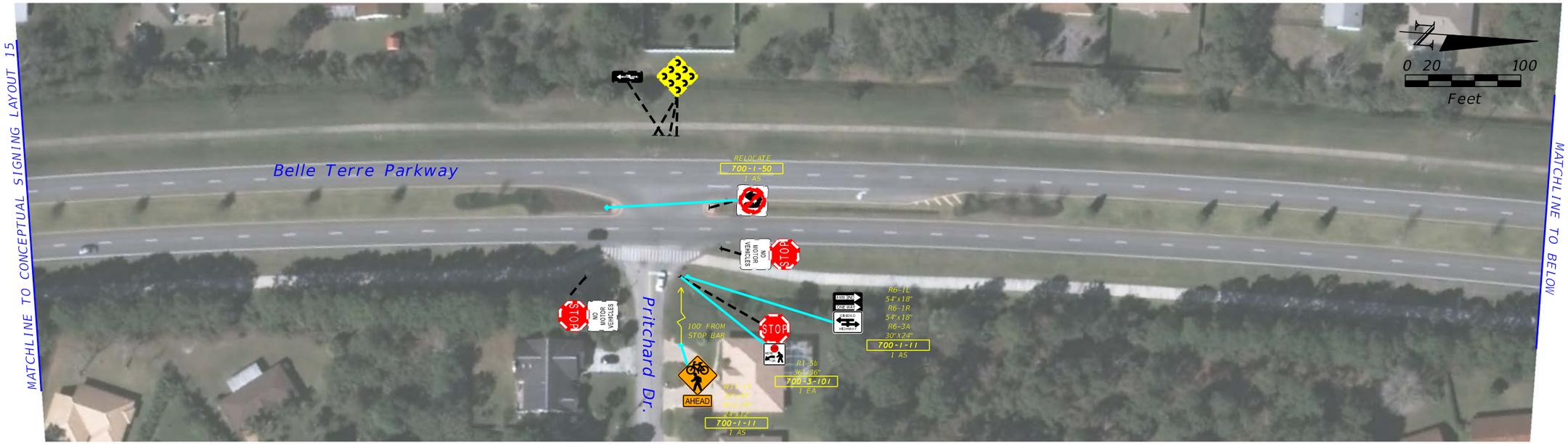

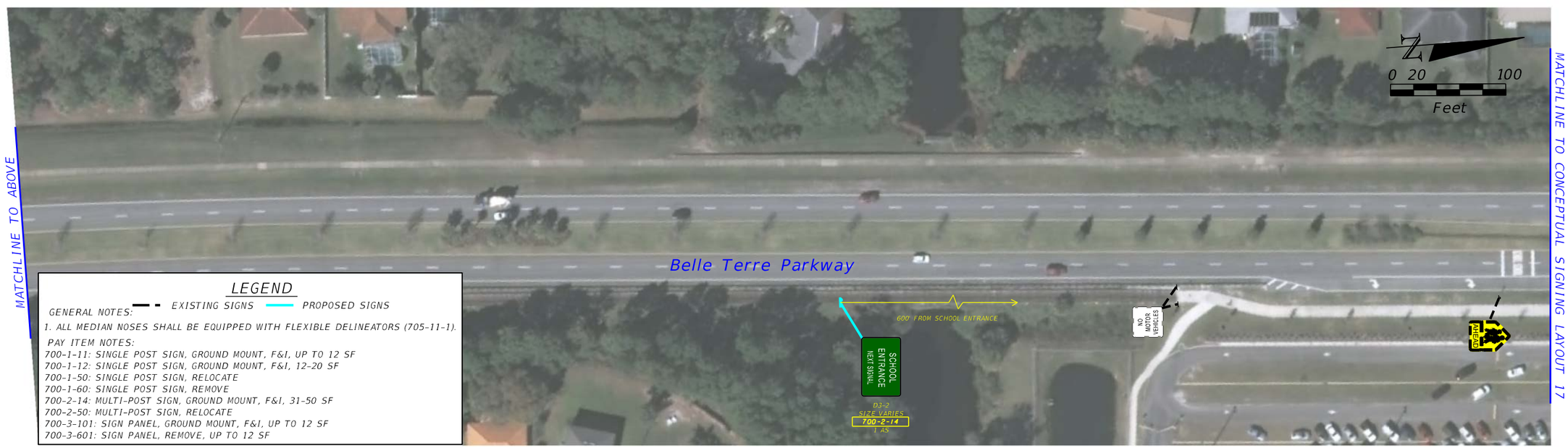

LEGEND

GENERAL NOTES: EXISTING SIGNS PROPOSED SIGNS

1. ALL MEDIAN NOSES SHALL BE EQUIPPED WITH FLEXIBLE DELINEATORS (705-11-1).

PAY ITEM NOTES:

700-1-11: SINGLE POST SIGN, GROUND MOUNT, F&I, UP TO 12 SF
700-1-12: SINGLE POST SIGN, GROUND MOUNT, F&I, 12-20 SF
700-1-50: SINGLE POST SIGN, RELOCATE
700-1-60: SINGLE POST SIGN, REMOVE
700-2-14: MULTI-POST SIGN, GROUND MOUNT, F&I, 31-50 SF
700-2-50: MULTI-POST SIGN, RELOCATE
700-3-101: SIGN PANEL, GROUND MOUNT, F&I, UP TO 12 SF
700-3-601: SIGN PANEL, REMOVE, UP TO 12 SF

vhb CONCEPTUAL SIGNING PLAN

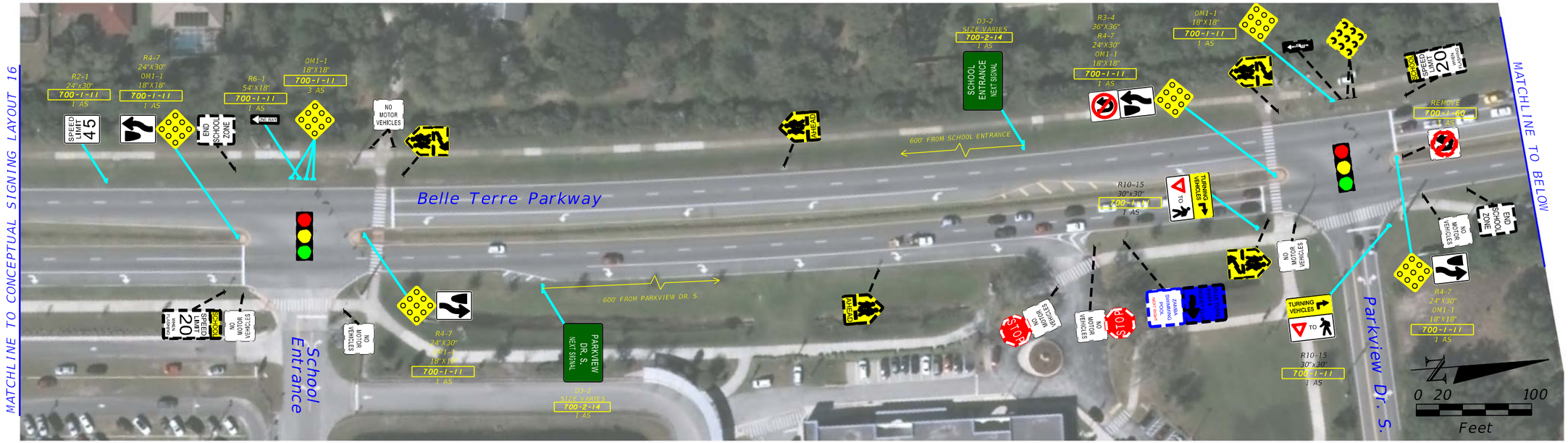

LEGEND

GENERAL NOTES: EXISTING SIGNS PROPOSED SIGNS

1. ALL MEDIAN NOSES SHALL BE EQUIPPED WITH FLEXIBLE DELINEATORS (705-11-1).

PAY ITEM NOTES:

700-1-11: SINGLE POST SIGN, GROUND MOUNT, F&I, UP TO 12 SF
700-1-12: SINGLE POST SIGN, GROUND MOUNT, F&I, 12-20 SF
700-1-50: SINGLE POST SIGN, RELOCATE
700-1-60: SINGLE POST SIGN, REMOVE
700-2-14: MULTI-POST SIGN, GROUND MOUNT, F&I, 31-50 SF
700-2-50: MULTI-POST SIGN, RELOCATE
700-3-101: SIGN PANEL, GROUND MOUNT, F&I, UP TO 12 SF
700-3-601: SIGN PANEL, REMOVE, UP TO 12 SF

vhb

CONCEPTUAL SIGNING PLAN

LAYOUT 18

vhb

CONCEPTUAL SIGNING PLAN

LAYOUT 19

vhb

CONCEPTUAL SIGNING PLAN

Appendix R

SYNCHRO 95th Percentile Queues Lengths for Year 2030

Lane Group	WBL	WBR	NBT	NBR	SBL	SBT
Lane Group Flow (vph)	322	83	755	163	36	1062
v/c Ratio	0.83	0.20	0.57	0.24	0.20	0.66
Control Delay	47.4	8.3	16.6	4.0	30.4	12.9
Queue Delay	0.0	0.0	0.0	0.0	0.0	0.0
Total Delay	47.4	8.3	16.6	4.0	30.4	12.9
Queue Length 50th (ft)	92	0	80	0	10	128
Queue Length 95th (ft)	#303	34	186	34	41	176
Internal Link Dist (ft)	974		1175			1277
Turn Bay Length (ft)		400		200	450	
Base Capacity (vph)	386	410	1668	823	180	2567
Starvation Cap Reductn	0	0	0	0	0	0
Spillback Cap Reductn	0	0	0	0	0	0
Storage Cap Reductn	0	0	0	0	0	0
Reduced v/c Ratio	0.83	0.20	0.45	0.20	0.20	0.41

Intersection Summary

95th percentile volume exceeds capacity, queue may be longer.
Queue shown is maximum after two cycles.

Lane Group	EBL	EBT	EBR	WBL	WBT	WBR	NBL	NBT	NBR	SBL	SBT	SBR
Lane Group Flow (vph)	161	443	35	123	611	425	85	257	191	615	243	415
v/c Ratio	0.51	0.64	0.07	0.61	0.78	0.50	0.54	0.73	0.39	1.02	0.48	0.59
Control Delay	56.7	47.0	0.2	62.5	49.3	11.0	67.2	57.5	3.9	89.1	38.9	9.3
Queue Delay	0.0	0.0	0.0	0.0	0.0	0.0	0.0	0.0	0.0	0.0	0.0	0.0
Total Delay	56.7	47.0	0.2	62.5	49.3	11.0	67.2	57.5	3.9	89.1	38.9	9.3
Queue Length 50th (ft)	57	154	0	85	217	79	60	177	0	~245	147	23
Queue Length 95th (ft)	108	247	0	170	329	203	#153	301	23	#479	258	122
Internal Link Dist (ft)		2314			2323			1058			1402	
Turn Bay Length (ft)	450		475	485		485	350		280	525		
Base Capacity (vph)	471	962	633	310	1116	853	158	557	645	603	718	839
Starvation Cap Reductn	0	0	0	0	0	0	0	0	0	0	0	0
Spillback Cap Reductn	0	0	0	0	0	0	0	0	0	0	0	0
Storage Cap Reductn	0	0	0	0	0	0	0	0	0	0	0	0
Reduced v/c Ratio	0.34	0.46	0.06	0.40	0.55	0.50	0.54	0.46	0.30	1.02	0.34	0.49

Intersection Summary

~ Volume exceeds capacity, queue is theoretically infinite.
Queue shown is maximum after two cycles.

95th percentile volume exceeds capacity, queue may be longer.
Queue shown is maximum after two cycles.

Lane Group	EBL	EBT	EBR	WBL	WBT	WBR	NBL	NBT	NBR	SBL	SBT	SBR
Lane Group Flow (vph)	221	58	211	29	42	128	157	656	7	282	1149	160
v/c Ratio	0.92	0.18	0.42	0.11	0.22	0.35	0.73	0.56	0.01	0.74	0.76	0.20
Control Delay	76.0	36.4	4.4	26.8	38.6	2.6	59.2	26.8	0.0	46.0	26.0	1.7
Queue Delay	0.0	0.0	0.0	0.0	0.0	0.0	0.0	0.0	0.0	0.0	0.0	0.0
Total Delay	76.0	36.4	4.4	26.8	38.6	2.6	59.2	26.8	0.0	46.0	26.0	1.7
Queue Length 50th (ft)	109	26	0	13	22	0	83	151	0	142	265	0
Queue Length 95th (ft)	#263	69	24	34	52	0	#193	228	0	#278	392	18
Internal Link Dist (ft)		584			974			1498			2662	
Turn Bay Length (ft)			150	285			325		450	450		275
Base Capacity (vph)	241	549	660	399	785	800	215	1174	709	392	1527	803
Starvation Cap Reductn	0	0	0	0	0	0	0	0	0	0	0	0
Spillback Cap Reductn	0	0	0	0	0	0	0	0	0	0	0	0
Storage Cap Reductn	0	0	0	0	0	0	0	0	0	0	0	0
Reduced v/c Ratio	0.92	0.11	0.32	0.07	0.05	0.16	0.73	0.56	0.01	0.72	0.75	0.20

Intersection Summary

95th percentile volume exceeds capacity, queue may be longer.
Queue shown is maximum after two cycles.

Lane Group	EBL	EBT	EBR	WBL	WBT	WBR	NBL	NBT	NBR	SBL	SBT	SBR
Lane Group Flow (vph)	28	121	203	217	238	312	178	717	111	426	1172	62
v/c Ratio	0.11	0.27	0.38	0.68	0.51	0.50	0.71	0.74	0.19	0.83	0.81	0.09
Control Delay	25.3	26.8	5.9	40.2	31.0	6.0	33.5	33.1	0.8	32.7	28.0	0.5
Queue Delay	0.0	0.0	0.0	0.0	0.0	0.0	0.0	0.0	0.0	0.0	0.0	0.0
Total Delay	25.3	26.8	5.9	40.2	31.0	6.0	33.5	33.1	0.8	32.7	28.0	0.5
Queue Length 50th (ft)	12	53	0	106	111	0	39	174	0	138	271	0
Queue Length 95th (ft)	33	98	48	184	181	58	#155	280	1	#379	437	3
Internal Link Dist (ft)		1349			1039			2662			1335	
Turn Bay Length (ft)	300		250	250		250	350		250	350		250
Base Capacity (vph)	427	766	775	540	796	851	251	1187	658	516	1658	804
Starvation Cap Reductn	0	0	0	0	0	0	0	0	0	0	0	0
Spillback Cap Reductn	0	0	0	0	0	0	0	0	0	0	0	0
Storage Cap Reductn	0	0	0	0	0	0	0	0	0	0	0	0
Reduced v/c Ratio	0.07	0.16	0.26	0.40	0.30	0.37	0.71	0.60	0.17	0.83	0.71	0.08

Intersection Summary

95th percentile volume exceeds capacity, queue may be longer.
Queue shown is maximum after two cycles.

Lane Group	EBL	EBR	NBL	NBT	SBT	SBR
Lane Group Flow (vph)	175	398	219	849	1229	129
v/c Ratio	0.57	0.68	0.63	0.38	0.88	0.19
Control Delay	35.2	11.1	19.8	7.6	31.2	6.4
Queue Delay	0.0	0.0	0.0	0.0	0.0	0.0
Total Delay	35.2	11.1	19.8	7.6	31.2	6.4
Queue Length 50th (ft)	71	12	38	83	253	6
Queue Length 95th (ft)	136	91	120	147	#482	45
Internal Link Dist (ft)	1474			1348	1500	
Turn Bay Length (ft)	250		350			200
Base Capacity (vph)	648	830	437	2434	1395	687
Starvation Cap Reductn	0	0	0	0	0	0
Spillback Cap Reductn	0	0	0	0	0	0
Storage Cap Reductn	0	0	0	0	0	0
Reduced v/c Ratio	0.27	0.48	0.50	0.35	0.88	0.19

Intersection Summary

95th percentile volume exceeds capacity, queue may be longer.
Queue shown is maximum after two cycles.

Lane Group	EBL	EBT	WBL	WBT	NBL	NBT	NBR	SBL	SBT	SBR
Lane Group Flow (vph)	183	219	188	241	310	938	66	107	917	160
v/c Ratio	0.65	0.63	0.66	0.75	0.96	0.67	0.09	0.59	0.83	0.24
Control Delay	37.5	43.4	41.7	42.2	83.5	27.3	0.2	57.5	38.0	0.8
Queue Delay	0.0	0.0	0.0	0.0	0.0	0.0	0.0	0.0	0.0	0.0
Total Delay	37.5	43.4	41.7	42.2	83.5	27.3	0.2	57.5	38.0	0.8
Queue Length 50th (ft)	88	126	90	105	~199	244	0	65	269	0
Queue Length 95th (ft)	145	203	148	189	#403	346	0	#142	377	0
Internal Link Dist (ft)		1676		1621		1052			1197	
Turn Bay Length (ft)	325		225		350		325	250		325
Base Capacity (vph)	282	468	287	441	322	1511	782	189	1245	723
Starvation Cap Reductn	0	0	0	0	0	0	0	0	0	0
Spillback Cap Reductn	0	0	0	0	0	0	0	0	0	0
Storage Cap Reductn	0	0	0	0	0	0	0	0	0	0
Reduced v/c Ratio	0.65	0.47	0.66	0.55	0.96	0.62	0.08	0.57	0.74	0.22

Intersection Summary

~ Volume exceeds capacity, queue is theoretically infinite.
Queue shown is maximum after two cycles.

95th percentile volume exceeds capacity, queue may be longer.
Queue shown is maximum after two cycles.

Lane Group	WBL	WBR	NBT	NBR	SBL	SBT
Lane Group Flow (vph)	35	31	1405	37	211	1137
v/c Ratio	0.14	0.10	0.66	0.04	0.82	0.40
Control Delay	23.8	10.2	11.7	3.2	38.2	4.5
Queue Delay	0.0	0.0	0.0	0.0	0.0	0.0
Total Delay	23.8	10.2	11.7	3.2	38.2	4.5
Queue Length 50th (ft)	12	0	213	0	30	98
Queue Length 95th (ft)	34	20	291	11	#99	134
Internal Link Dist (ft)	282		2293			582
Turn Bay Length (ft)				390	500	
Base Capacity (vph)	854	1065	2134	969	258	2820
Starvation Cap Reductn	0	0	0	0	0	0
Spillback Cap Reductn	0	0	0	0	0	0
Storage Cap Reductn	0	0	0	0	0	0
Reduced v/c Ratio	0.04	0.03	0.66	0.04	0.82	0.40

Intersection Summary

95th percentile volume exceeds capacity, queue may be longer.
Queue shown is maximum after two cycles.

Lane Group	WBL	WBR	NBT	SBL	SBT
Lane Group Flow (vph)	332	273	1436	95	1016
v/c Ratio	0.98	0.51	0.70	0.37	0.41
Control Delay	82.4	7.9	15.5	8.2	6.4
Queue Delay	0.0	0.0	0.0	0.0	0.0
Total Delay	82.4	7.9	15.5	8.2	6.4
Queue Length 50th (ft)	185	0	282	14	109
Queue Length 95th (ft)	#353	63	383	28	142
Internal Link Dist (ft)	810		154		3605
Turn Bay Length (ft)	275			175	
Base Capacity (vph)	338	532	2066	293	2453
Starvation Cap Reductn	0	0	0	0	0
Spillback Cap Reductn	0	0	0	0	0
Storage Cap Reductn	0	0	0	0	0
Reduced v/c Ratio	0.98	0.51	0.70	0.32	0.41

Intersection Summary

95th percentile volume exceeds capacity, queue may be longer.
Queue shown is maximum after two cycles.

Lane Group	SET	SER	NWL	NWT	NEL	NER
Lane Group Flow (vph)	1014	226	140	1584	558	163
v/c Ratio	0.71	0.29	0.55	0.78	0.68	0.32
Control Delay	21.7	3.3	17.1	16.3	31.2	6.5
Queue Delay	0.0	0.0	0.0	0.0	0.0	0.0
Total Delay	21.7	3.3	17.1	16.3	31.2	6.5
Queue Length 50th (ft)	195	0	27	269	120	0
Queue Length 95th (ft)	302	40	#64	437	193	45
Internal Link Dist (ft)	1236			281	1217	
Turn Bay Length (ft)		325	175		225	225
Base Capacity (vph)	1903	962	255	2497	1182	652
Starvation Cap Reductn	0	0	0	0	0	0
Spillback Cap Reductn	0	0	0	0	0	0
Storage Cap Reductn	0	0	0	0	0	0
Reduced v/c Ratio	0.53	0.23	0.55	0.63	0.47	0.25

Intersection Summary

95th percentile volume exceeds capacity, queue may be longer.
Queue shown is maximum after two cycles.

Lane Group	WBL	WBR	NBT	NBR	SBL	SBT
Lane Group Flow (vph)	228	47	1155	347	71	632
v/c Ratio	0.75	0.15	0.83	0.41	0.42	0.32
Control Delay	45.0	9.9	26.2	3.7	38.7	7.9
Queue Delay	0.0	0.0	0.0	0.0	0.0	0.0
Total Delay	45.0	9.9	26.2	3.7	38.7	7.9
Queue Length 50th (ft)	95	0	236	0	30	64
Queue Length 95th (ft)	#197	26	#356	48	67	92
Internal Link Dist (ft)	974		1175			1277
Turn Bay Length (ft)		400		200	450	
Base Capacity (vph)	328	333	1449	866	169	2273
Starvation Cap Reductn	0	0	0	0	0	0
Spillback Cap Reductn	0	0	0	0	0	0
Storage Cap Reductn	0	0	0	0	0	0
Reduced v/c Ratio	0.70	0.14	0.80	0.40	0.42	0.28

Intersection Summary

95th percentile volume exceeds capacity, queue may be longer.
Queue shown is maximum after two cycles.

Lane Group	EBL	EBT	EBR	WBL	WBT	WBR	NBL	NBT	NBR	SBL	SBT	SBR
Lane Group Flow (vph)	426	589	98	211	631	626	49	392	102	443	289	295
v/c Ratio	0.97	0.78	0.18	0.82	0.79	0.81	0.36	0.90	0.18	0.88	0.46	0.41
Control Delay	94.8	57.5	0.8	81.0	55.5	35.4	69.1	74.6	0.7	74.7	39.7	5.6
Queue Delay	0.0	0.0	0.0	0.0	0.0	0.0	0.0	0.0	0.0	0.0	0.0	0.0
Total Delay	94.8	57.5	0.8	81.0	55.5	35.4	69.1	74.6	0.7	74.7	39.7	5.6
Queue Length 50th (ft)	~206	264	0	183	275	401	42	336	0	202	209	0
Queue Length 95th (ft)	#325	333	0	#313	345	575	88	#527	0	#308	310	67
Internal Link Dist (ft)		2314			2323			1058			1402	
Turn Bay Length (ft)	450		475	485		485	350		280	525		
Base Capacity (vph)	437	861	576	285	961	777	135	476	586	514	636	734
Starvation Cap Reductn	0	0	0	0	0	0	0	0	0	0	0	0
Spillback Cap Reductn	0	0	0	0	0	0	0	0	0	0	0	0
Storage Cap Reductn	0	0	0	0	0	0	0	0	0	0	0	0
Reduced v/c Ratio	0.97	0.68	0.17	0.74	0.66	0.81	0.36	0.82	0.17	0.86	0.45	0.40

Intersection Summary

~ Volume exceeds capacity, queue is theoretically infinite.
Queue shown is maximum after two cycles.

95th percentile volume exceeds capacity, queue may be longer.
Queue shown is maximum after two cycles.

Lane Group	EBL	EBT	EBR	WBL	WBT	WBR	NBL	NBT	NBR	SBL	SBT	SBR
Lane Group Flow (vph)	154	52	204	54	94	314	261	1271	17	261	945	223
v/c Ratio	0.77	0.27	0.59	0.21	0.45	0.69	0.78	0.83	0.02	0.82	0.63	0.28
Control Delay	67.2	52.3	14.1	37.0	53.1	13.5	59.7	34.0	0.1	66.5	28.8	4.9
Queue Delay	0.0	0.0	0.0	0.0	0.0	0.0	0.0	0.0	0.0	0.0	0.0	0.0
Total Delay	67.2	52.3	14.1	37.0	53.1	13.5	59.7	34.0	0.1	66.5	28.8	4.9
Queue Length 50th (ft)	96	36	0	32	64	0	176	407	0	180	273	4
Queue Length 95th (ft)	#176	76	71	66	116	83	281	562	0	#347	401	57
Internal Link Dist (ft)		584			974			1498			2662	
Turn Bay Length (ft)			150	285			325		450	450		275
Base Capacity (vph)	201	431	524	336	618	737	397	1553	795	317	1501	793
Starvation Cap Reductn	0	0	0	0	0	0	0	0	0	0	0	0
Spillback Cap Reductn	0	0	0	0	0	0	0	0	0	0	0	0
Storage Cap Reductn	0	0	0	0	0	0	0	0	0	0	0	0
Reduced v/c Ratio	0.77	0.12	0.39	0.16	0.15	0.43	0.66	0.82	0.02	0.82	0.63	0.28

Intersection Summary

95th percentile volume exceeds capacity, queue may be longer.
Queue shown is maximum after two cycles.

Lane Group	EBL	EBT	EBR	WBL	WBT	WBR	NBL	NBT	NBR	SBL	SBT	SBR
Lane Group Flow (vph)	62	106	208	211	248	360	195	1400	143	227	1011	51
v/c Ratio	0.31	0.25	0.40	0.71	0.57	0.68	0.58	0.88	0.18	0.84	0.62	0.07
Control Delay	34.8	31.6	6.5	47.9	38.5	20.2	17.0	33.5	5.9	51.8	23.5	0.2
Queue Delay	0.0	0.0	0.0	0.0	0.0	0.0	0.0	0.0	0.0	0.0	0.0	0.0
Total Delay	34.8	31.6	6.5	47.9	38.5	20.2	17.0	33.5	5.9	51.8	23.5	0.2
Queue Length 50th (ft)	32	55	0	122	139	79	46	402	8	88	243	0
Queue Length 95th (ft)	69	99	53	200	213	176	102	#661	49	#267	385	0
Internal Link Dist (ft)		1349			1039			2662			1335	
Turn Bay Length (ft)	300		250	250		250	350		250	350		250
Base Capacity (vph)	317	668	701	464	674	706	363	1663	806	269	1664	801
Starvation Cap Reductn	0	0	0	0	0	0	0	0	0	0	0	0
Spillback Cap Reductn	0	0	0	0	0	0	0	0	0	0	0	0
Storage Cap Reductn	0	0	0	0	0	0	0	0	0	0	0	0
Reduced v/c Ratio	0.20	0.16	0.30	0.45	0.37	0.51	0.54	0.84	0.18	0.84	0.61	0.06

Intersection Summary

95th percentile volume exceeds capacity, queue may be longer.
Queue shown is maximum after two cycles.

Lane Group	EBL	EBR	NBL	NBT	SBT	SBR
Lane Group Flow (vph)	169	234	393	1399	1058	216
v/c Ratio	0.57	0.51	0.91	0.61	0.81	0.30
Control Delay	37.0	8.4	46.8	9.4	27.8	4.7
Queue Delay	0.0	0.0	0.0	0.0	0.0	0.0
Total Delay	37.0	8.4	46.8	9.4	27.8	4.7
Queue Length 50th (ft)	74	0	126	169	226	4
Queue Length 95th (ft)	132	56	#321	276	#347	48
Internal Link Dist (ft)	1474			1348	1500	
Turn Bay Length (ft)	250		350			200
Base Capacity (vph)	652	727	431	2332	1336	724
Starvation Cap Reductn	0	0	0	0	0	0
Spillback Cap Reductn	0	0	0	0	0	0
Storage Cap Reductn	0	0	0	0	0	0
Reduced v/c Ratio	0.26	0.32	0.91	0.60	0.79	0.30

Intersection Summary

95th percentile volume exceeds capacity, queue may be longer.
Queue shown is maximum after two cycles.

Lane Group	EBL	EBT	WBL	WBT	NBL	NBT	NBR	SBL	SBT	SBR
Lane Group Flow (vph)	178	298	114	141	278	1085	173	118	1096	220
v/c Ratio	0.47	0.80	0.52	0.42	0.91	0.75	0.23	0.67	0.93	0.31
Control Delay	30.1	53.6	36.4	22.9	75.3	30.0	3.5	64.3	47.0	3.2
Queue Delay	0.0	0.0	0.0	0.0	0.0	0.0	0.0	0.0	0.0	0.0
Total Delay	30.1	53.6	36.4	22.9	75.3	30.0	3.5	64.3	47.0	3.2
Queue Length 50th (ft)	85	180	52	40	176	307	0	74	353	0
Queue Length 95th (ft)	140	275	94	96	#351	421	37	#163	#527	34
Internal Link Dist (ft)		1676		1621		1052			1197	
Turn Bay Length (ft)	325		225		350		325	250		325
Base Capacity (vph)	378	472	219	431	306	1444	755	180	1182	699
Starvation Cap Reductn	0	0	0	0	0	0	0	0	0	0
Spillback Cap Reductn	0	0	0	0	0	0	0	0	0	0
Storage Cap Reductn	0	0	0	0	0	0	0	0	0	0
Reduced v/c Ratio	0.47	0.63	0.52	0.33	0.91	0.75	0.23	0.66	0.93	0.31

Intersection Summary

95th percentile volume exceeds capacity, queue may be longer.
Queue shown is maximum after two cycles.

Lane Group	WBL	WBR	NBT	NBR	SBL	SBT
Lane Group Flow (vph)	44	58	1248	53	26	1512
v/c Ratio	0.12	0.15	0.53	0.05	0.09	0.59
Control Delay	22.6	8.4	9.3	2.7	4.5	7.1
Queue Delay	0.0	0.0	0.0	0.0	0.0	0.0
Total Delay	22.6	8.4	9.3	2.7	4.5	7.1
Queue Length 50th (ft)	12	0	113	0	3	154
Queue Length 95th (ft)	39	27	241	14	9	212
Internal Link Dist (ft)	282		2293			582
Turn Bay Length (ft)				390	500	
Base Capacity (vph)	1313	1191	2365	1075	298	2650
Starvation Cap Reductn	0	0	0	0	0	0
Spillback Cap Reductn	0	0	0	0	0	0
Storage Cap Reductn	0	0	0	0	0	0
Reduced v/c Ratio	0.03	0.05	0.53	0.05	0.09	0.57

Intersection Summary

Lane Group	WBL	WBR	NBT	SBL	SBT
Lane Group Flow (vph)	221	157	1306	179	1317
v/c Ratio	0.64	0.36	0.69	0.58	0.54
Control Delay	42.2	7.9	16.8	15.4	7.6
Queue Delay	0.0	0.0	0.0	0.0	0.0
Total Delay	42.2	7.9	16.8	15.4	7.6
Queue Length 50th (ft)	114	0	256	28	161
Queue Length 95th (ft)	189	50	331	80	206
Internal Link Dist (ft)	810		154		3605
Turn Bay Length (ft)	275			175	
Base Capacity (vph)	345	438	1886	309	2453
Starvation Cap Reductn	0	0	0	0	0
Spillback Cap Reductn	0	0	0	0	0
Storage Cap Reductn	0	0	0	0	0
Reduced v/c Ratio	0.64	0.36	0.69	0.58	0.54

Intersection Summary

Lane Group	SET	SER	NWL	NWT	NEL	NER
Lane Group Flow (vph)	1539	542	206	1121	474	121
v/c Ratio	0.91	0.52	0.93	0.50	0.68	0.29
Control Delay	30.8	3.4	64.6	9.7	35.5	7.4
Queue Delay	0.0	0.0	0.0	0.0	0.0	0.0
Total Delay	30.8	3.4	64.6	9.7	35.5	7.4
Queue Length 50th (ft)	364	0	54	144	116	0
Queue Length 95th (ft)	#591	56	#204	233	164	40
Internal Link Dist (ft)	1236			281	1217	
Turn Bay Length (ft)		325	175		225	225
Base Capacity (vph)	1685	1040	221	2225	1053	569
Starvation Cap Reductn	0	0	0	0	0	0
Spillback Cap Reductn	0	0	0	0	0	0
Storage Cap Reductn	0	0	0	0	0	0
Reduced v/c Ratio	0.91	0.52	0.93	0.50	0.45	0.21

Intersection Summary

95th percentile volume exceeds capacity, queue may be longer.
Queue shown is maximum after two cycles.

Appendix S

Preliminary Cost Estimates Details

COST ESTIMATES FOR POTENTIAL COUNTERMEASURES AT THE INTERSECTION OF BELLE TERRE PKWY AND PINE GROVE DR, CITY OF PALM COAST, FLORIDA				
Description	**Qty**	**Unit**	**Unit Cost**	**Total Cost**
Clearing and Grubbing	1	AC	$7,284.06	$7,284.06
Milling Existing Pavement	1227	SY	$2.48	$3,041.86
Stabilization	665	SY	$3.55	$2,361.54
Base	665	SY	$13.18	$8,767.63
Asphalt (Structural)	262	TN	$93.05	$24,378.12
Asphalt (Friction Course)	57	TN	$129.08	$7,368.59
Concerete Curb and Gutter, Type E	338	LF	$15.37	$5,195.06
Concrete Sidewalk , 6" Thick	574	SY	$40.17	$23,075.43
Signing and Pavement Marking (1.5%)	1	LS	$1,222.08	$1,222.08
Drainage (20%)	1	LS	$16,294.46	$16,294.46
Utlities (15%)	1	LS	$12,220.84	$12,220.84
Environmental Mitigation (2.5%)	1	LS	$2,036.81	$2,036.81
Landscaping (2.5%)	1	LS	$2,036.81	$2,036.81
Subtotal				**$115,283.28**
MOBILIZATION	10%			$11,528.33
MAINTENANCE OF TRAFFIC	10%			$11,528.33
PROJECT UNKNOWNS	25%			$28,820.82
Total Construction Cost				**$167,160.76**
ENGINEERING DESIGN	8%			$13,372.86
CONSTRUCTION ENGINEERING AND INSPECTION	8%			$13,372.86
*** Grand Total =**				***$193,906***

*Note: * Calculation of Right-Of-Way encroachment and associated costs will be calculated in the design phase of the project*

COST ESTIMATES FOR POTENTIAL COUNTERMEASURES AT THE INTERSECTION OF BELLE TERRE BLVD/PKWY AND SR 100, CITY OF PALM COAST, FLORIDA				
Description	**Qty**	**Unit**	**Unit Cost**	**Total Cost**
Clearing and Grubbing	1	AC	$7,284.06	$7,284.06
Milling Existing Pavement	796	SY	$2.48	$1,974.91
Stabilization	1234	SY	$3.55	$4,379.12
Base	1234	SY	$13.18	$16,258.26
Asphalt (Structural)	427	TN	$93.05	$39,716.01
Asphalt (Friction Course)	84	TN	$129.08	$10,808.24
Concerete Curb and Gutter, Type E	43	LF	$15.37	$660.91
Traffic Signal, F&I, 3 Sections, 1 Way	1	AS	$969.13	$969.13
Auxiliaries, F&I, Backplate with Retrorefelctive Border	1	EA	$196.69	$196.69
Traffic Controller, F&I	1	EA	$4,238.60	$4,238.60
Signing and Pavement Marking (1.5%)	1	LS	$1,297.29	$1,297.29
Drainage (20%)	1	LS	$17,297.19	$17,297.19
Utlities (15%)	1	LS	$12,972.89	$12,972.89
Environmental Mitigation (2.5%)	1	LS	$2,162.15	$2,162.15
Landscaping (2.5%)	1	LS	$2,162.15	$2,162.15
Subtotal				**$122,377.61**
MOBILIZATION	10%			$12,237.76
MAINTENANCE OF TRAFFIC	10%			$12,237.76
PROJECT UNKNOWNS	25%			$30,594.40
Total Construction Cost				**$177,447.53**
ENGINEERING DESIGN	8%			$14,195.80
CONSTRUCTION ENGINEERING AND INSPECTION	8%			$14,195.80
Grand Total =				***$205,839***

*Note: * Calculation of Right-Of-Way encroachment and associated costs will be calculated in the design phase of the project*

COST ESTIMATES FOR POTENTIAL COUNTERMEASURES
AT THE INTERSECTION OF BELLE TERRE BLVD/PKWY AND ROYAL PALMS PKWY, CITY OF PALM COAST, FLORIDA

Description	Qty	Unit	Unit Cost	Total Cost
Clearing and Grubbing	1	AC	$7,284.06	$7,284.06
Milling Existing Pavement	3919	SY	$2.48	$9,719.12
Stabilization	1840	SY	$3.55	$6,530.42
Base	1840	SY	$13.18	$24,245.34
Asphalt (Structural)	644	TN	$93.05	$59,890.19
Asphalt (Friction Course)	128	TN	$129.08	$16,462.92
Traffic Signal, F&I, 3 Sections, 1 Way	4	AS	$969.13	$3,876.52
Auxiliaries, F&I, Backplate with Retrorefelctive Border	4	EA	$196.69	$786.76
Traffic Controller, F&I	1	EA	$4,238.60	$4,238.60
Concrete Sidewalk , 6" Thick	1048	SY	$40.17	$42,080.31
Signing and Pavement Marking (1.5%)	1	LS	$2,626.71	$2,626.71
Drainage (20%)	1	LS	$35,022.85	$35,022.85
Utlities (15%)	1	LS	$26,267.13	$26,267.13
Environmental Mitigation (2.5%)	1	LS	$4,377.86	$4,377.86
Landscaping (2.5%)	1	LS	$4,377.86	$4,377.86
Subtotal				**$247,786.64**
MOBILIZATION	10%			$24,778.66
MAINTENANCE OF TRAFFIC	10%			$24,778.66
PROJECT UNKNOWNS	25%			$61,946.66
Total Construction Cost				**$359,290.63**
ENGINEERING DESIGN	8%			$28,743.25
CONSTRUCTION ENGINEERING AND INSPECTION	8%			$28,743.25
Grand Total =				***$416,777***

*Note: * Calculation of Right-Of-Way encroachment and associated costs will be calculated in the design phase of the project*

COST ESTIMATES FOR POTENTIAL COUNTERMEASURES
AT THE INTERSECTION OF BELLE TERRE BLVD/PKWY AND EASTHAMPTON BLVD/CENTRAL AVE,
CITY OF PALM COAST, FLORIDA

Description	Qty	Unit	Unit Cost	Total Cost
Clearing and Grubbing	1	AC	$7,284.06	$7,284.06
Milling Existing Pavement	510	SY	$2.48	$1,265.63
Stabilization	318	SY	$3.55	$1,127.32
Base	318	SY	$13.18	$4,185.38
Asphalt (Structural)	143	TN	$93.05	$13,349.37
Asphalt (Friction Course)	34	TN	$129.08	$4,408.14
Traffic Signal, F&I, 3 Sections, 1 Way	1	AS	$969.13	$969.13
Auxiliaries, F&I, Backplate with Retrorefelctive Border	1	EA	$196.69	$196.69
Traffic Controller, F&I	1	EA	$4,238.60	$4,238.60
Concrete Sidewalk , 6" Thick	186	SY	$40.17	$7,467.16
Signing and Pavement Marking (1.5%)	1	LS	$667.37	$667.37
Drainage (20%)	1	LS	$8,898.29	$8,898.29
Utlities (15%)	1	LS	$6,673.72	$6,673.72
Environmental Mitigation (2.5%)	1	LS	$1,112.29	$1,112.29
Landscaping (2.5%)	1	LS	$1,112.29	$1,112.29
Subtotal				**$62,955.43**
MOBILIZATION	10%			$6,295.54
MAINTENANCE OF TRAFFIC	10%			$6,295.54
PROJECT UNKNOWNS	25%			$15,738.86
Total Construction Cost				**$91,285.37**
ENGINEERING DESIGN	8%			$7,302.83
CONSTRUCTION ENGINEERING AND INSPECTION	8%			$7,302.83
Grand Total =				***$105,891***

*Note: * Calculation of Right-Of-Way encroachment and associated costs will be calculated in the design phase of the project*

COST ESTIMATES FOR POTENTIAL COUNTERMEASURES AT THE INTERSECTION OF BELLE TERRE PKWY AND POINT PLEASANT DR, CITY OF PALM COAST, FLORIDA				
Description	**Qty**	**Unit**	**Unit Cost**	**Total Cost**
Clearing and Grubbing	1	AC	$7,284.06	$7,284.06
Milling Existing Pavement	623	SY	$2.48	$1,543.94
Stabilization	664	SY	$3.55	$2,355.62
Base	664	SY	$13.18	$8,745.66
Asphalt (Structural)	251	TN	$93.05	$23,351.72
Asphalt (Friction Course)	53	TN	$129.08	$6,847.96
Concrete Sidewalk , 6" Thick	459	SY	$40.17	$18,442.49
Signing and Pavement Marking (1.5%)	1	LS	$1,028.57	$1,028.57
Drainage (20%)	1	LS	$13,714.29	$13,714.29
Utlities (15%)	1	LS	$10,285.72	$10,285.72
Environmental Mitigation (2.5%)	1	LS	$1,714.29	$1,714.29
Landscaping (2.5%)	1	LS	$1,714.29	$1,714.29
Subtotal				**$97,028.62**
MOBILIZATION	10%			$9,702.86
MAINTENANCE OF TRAFFIC	10%			$9,702.86
PROJECT UNKNOWNS	25%			$24,257.16
Total Construction Cost				**$140,691.50**
ENGINEERING DESIGN	8%			$11,255.32
CONSTRUCTION ENGINEERING AND INSPECTION	8%			$11,255.32
*** Grand Total =**				***$163,202***

*Note: * Calculation of Right-Of-Way encroachment and associated costs will be calculated in the design phase of the project*

COST ESTIMATES FOR POTENTIAL COUNTERMEASURES AT THE INTERSECTION OF BELLE TERRE PKWY AND PONCE DELEON DR, CITY OF PALM COAST, FLORIDA				
Description	**Qty**	**Unit**	**Unit Cost**	**Total Cost**
Clearing and Grubbing	1	AC	$7,284.06	$7,284.06
Milling Existing Pavement	623	SY	$2.48	$1,543.94
Stabilization	664	SY	$3.55	$2,355.62
Base	664	SY	$13.18	$8,745.66
Asphalt (Structural)	251	TN	$93.05	$23,351.72
Asphalt (Friction Course)	53	TN	$129.08	$6,847.96
Concrete Sidewalk , 6" Thick	459	SY	$40.17	$18,442.49
Signing and Pavement Marking (1.5%)	1	LS	$1,028.57	$1,028.57
Drainage (20%)	1	LS	$13,714.29	$13,714.29
Utlities (15%)	1	LS	$10,285.72	$10,285.72
Environmental Mitigation (2.5%)	1	LS	$1,714.29	$1,714.29
Landscaping (2.5%)	1	LS	$1,714.29	$1,714.29
Subtotal				**$97,028.62**
MOBILIZATION	10%			$9,702.86
MAINTENANCE OF TRAFFIC	10%			$9,702.86
PROJECT UNKNOWNS	25%			$24,257.16
Total Construction Cost				**$140,691.50**
ENGINEERING DESIGN	8%			$11,255.32
CONSTRUCTION ENGINEERING AND INSPECTION	8%			$11,255.32
*** Grand Total =**				***$163,202***

*Note: * Calculation of Right-Of-Way encroachment and associated costs will be calculated in the design phase of the project*

COST ESTIMATES FOR POTENTIAL COUNTERMEASURES AT THE INTERSECTION OF BELLE TERRE PKWY AND PRITCHARD DR, CITY OF PALM COAST, FLORIDA				
Description	**Qty**	**Unit**	**Unit Cost**	**Total Cost**
Clearing and Grubbing	1	AC	$7,284.06	$7,284.06
Milling Existing Pavement	623	SY	$2.48	$1,543.94
Stabilization	664	SY	$3.55	$2,355.62
Base	664	SY	$13.18	$8,745.66
Asphalt (Structural)	251	TN	$93.05	$23,351.72
Asphalt (Friction Course)	53	TN	$129.08	$6,847.96
Concrete Sidewalk , 6" Thick	459	SY	$40.17	$18,442.49
Signing and Pavement Marking (1.5%)	1	LS	$1,028.57	$1,028.57
Drainage (20%)	1	LS	$13,714.29	$13,714.29
Utlities (15%)	1	LS	$10,285.72	$10,285.72
Environmental Mitigation (2.5%)	1	LS	$1,714.29	$1,714.29
Landscaping (2.5%)	1	LS	$1,714.29	$1,714.29
Subtotal				**$97,028.62**
MOBILIZATION	10%			$9,702.86
MAINTENANCE OF TRAFFIC	10%			$9,702.86
PROJECT UNKNOWNS	25%			$24,257.16
Total Construction Cost				**$140,691.50**
ENGINEERING DESIGN	8%			$11,255.32
CONSTRUCTION ENGINEERING AND INSPECTION	8%			$11,255.32
*** Grand Total =**				***$163,202***

*Note: * Calculation of Right-Of-Way encroachment and associated costs will be calculated in the design phase of the project*

COST ESTIMATES FOR POTENTIAL COUNTERMEASURES AT THE INTERSECTION OF BELLE TERRE PKWY AND WHIPPOORWILL DR, CITY OF PALM COAST, FLORIDA				
Description	**Qty**	**Unit**	**Unit Cost**	**Total Cost**
Clearing and Grubbing	1	AC	$7,284.06	$7,284.06
Milling Existing Pavement	571	SY	$2.48	$1,414.98
Stabilization	509	SY	$3.55	$1,806.16
Base	509	SY	$13.18	$6,705.69
Asphalt (Structural)	203	TN	$93.05	$18,858.91
Asphalt (Friction Course)	45	TN	$129.08	$5,746.96
Concrete Sidewalk , 6" Thick	337	SY	$40.17	$13,528.36
Signing and Pavement Marking (1.5%)	1	LS	$830.18	$830.18
Drainage (20%)	1	LS	$11,069.03	$11,069.03
Utlities (15%)	1	LS	$8,301.77	$8,301.77
Environmental Mitigation (2.5%)	1	LS	$1,383.63	$1,383.63
Landscaping (2.5%)	1	LS	$1,383.63	$1,383.63
Subtotal				**$78,313.35**
MOBILIZATION	10%			$7,831.34
MAINTENANCE OF TRAFFIC	10%			$7,831.34
PROJECT UNKNOWNS	25%			$19,578.34
Total Construction Cost				**$113,554.36**
ENGINEERING DESIGN	8%			$9,084.35
CONSTRUCTION ENGINEERING AND INSPECTION	8%			$9,084.35
*** Grand Total =**				***$131,723***

*Note: * Calculation of Right-Of-Way encroachment and associated costs will be calculated in the design phase of the project*

COST ESTIMATES FOR POTENTIAL COUNTERMEASURES AT THE INTERSECTION OF BELLE TERRE BLVD/PKWY AND WHITEVIEW PKWY, CITY OF PALM COAST, FLORIDA				
Description	**Qty**	**Unit**	**Unit Cost**	**Total Cost**
Pedestrian Signal, F&I, LED Count, 1-way	2	AS	$631.55	$1,263.10
Traffic Controller, F&I	1	EA	$4,238.60	$4,238.60
Thermoplastic, Preformed, 12" White, Crosswalk	185	LF	$2.24	$414.40
Thermoplastic, Preformed, 24" White, Crosswalk	150	LF	$4.19	$628.50
Subtotal				**$6,544.60**
MOBILIZATION	10%			$654.46
MAINTENANCE OF TRAFFIC	10%			$654.46
PROJECT UNKNOWNS	25%			$1,636.15
Total Construction Cost				**$9,489.67**
ENGINEERING DESIGN	8%			$759.17
CONSTRUCTION ENGINEERING AND INSPECTION	8%			$759.17
Grand Total =				***$11,008***

COST ESTIMATES FOR SIGNING ALONG THE STUDY CORRIDOR OF BELLE TERRE BLVD\PKWY, CITY OF PALM COAST, FLORIDA				
Description	**Qty**	**Unit**	**Unit Cost**	**Total Cost**
SINGLE POST SIGN, GROUND MOUNT, F&I, UP TO 12 SF	144	AS	$340.78	$49,072.32
SINGLE POST SIGN, GROUND MOUNT, F&I, 12-20 SF	1	AS	$1,017.65	$1,017.65
SINGLE POST SIGN, RELOCATE	4	AS	$167.84	$671.36
SINGLE POST SIGN, REMOVE	18	AS	$19.07	$343.26
MULTI-POST SIGN, GROUND MOUNT, F&I, 31-50 SF	17	AS	$4,720.09	$80,241.53
MULTI-POST SIGN, RELOCATE	2	AS	$3,612.58	$7,225.16
SIGN PANEL, GROUND MOUNT, F&I, UP TO 12 SF	24	EA	$169.76	$4,074.24
SIGN PANEL, REMOVE, UP TO 12 SF	1	EA	$45.64	$45.64
Subtotal				**$142,691.16**
MOBILIZATION	10%			$14,269.12
MAINTENANCE OF TRAFFIC	10%			$14,269.12
PROJECT UNKNOWNS	25%			$35,672.79
Total Construction Cost				**$206,902.18**
ENGINEERING DESIGN	8%			$16,552.17
CONSTRUCTION ENGINEERING AND INSPECTION	8%			$16,552.17
*** Grand Total =**				***$240,007***